TIP PROJECT: P-4405 K

See Sheet 1-A For Index of Sheets
See Sheet 1-B For Conventional Symbols

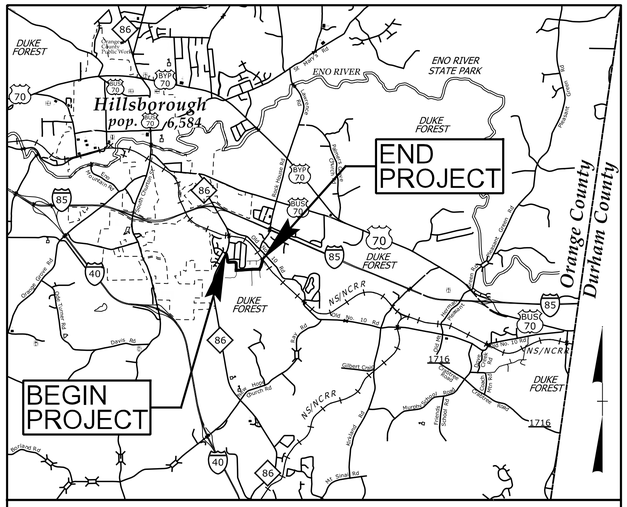

VICINITY MAP

NOTE: THIS PROJECT IS NOT WITHIN ANY MUNICIPAL BOUNDARIES

STATE OF NORTH CAROLINA
RAIL DIVISIONS

ORANGE COUNTY

STATE	STATE PROJECT REFERENCE NO.	SHEET NO.	TOTAL SHEETS
N.C.	P-4405 K	1	

STATE PROJ. NO.	F.A. PROJ. NO.	DESCRIPTION
62000.7.STR28T1B		PE

LOCATION: BYRDSVILLE ROAD – EXTENSION FROM NS/NCRR TO NC 86 AND CROSSING CLOSURE

TYPE OF WORK: GRADING, PAVING, DRAINAGE AND STRUCTURE

NAD 83/
NSRS 2007

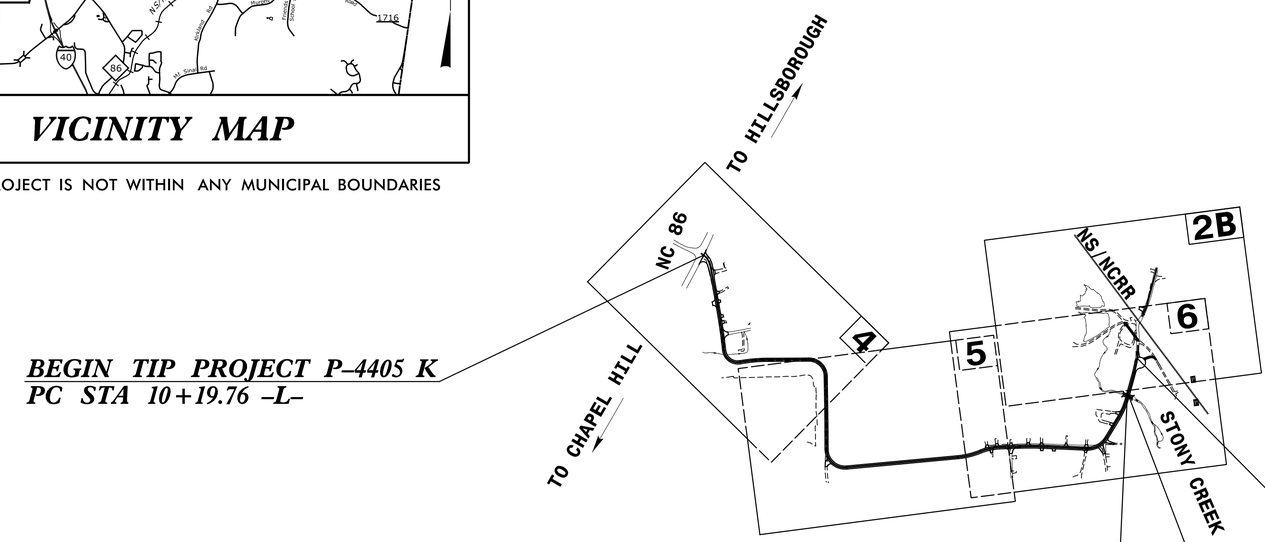

BEGIN TIP PROJECT P-4405 K
PC STA 10+19.76 –L–

END TIP PROJECT P-4405 K
POC STA 54+07.85 –L–

BEGIN CULVERT
–L– STA. 51+43 +/–

END CULVERT
–L– STA. 51+63 +/–

INCOMPLETE PLANS
DO NOT USE FOR R/W ACQUISITION
PRELIMINARY PLANS
DO NOT USE FOR CONSTRUCTION

SUBMITTAL: CFI PLANS
DATE: JANUARY 23, 2015

NCDOT CONTACT: DAN HAVENER, PE
PROJECT MANAGER

CLEARING ON THIS PROJECT SHALL BE PERFORMED TO THE LIMITS ESTABLISHED BY METHOD ____.

CONTRACT:

GRAPHIC SCALES

50 25 0 50 100
PLANS

50 25 0 50 100
PROFILE (HORIZONTAL)

10 5 0 10 20
PROFILE (VERTICAL)

DESIGN DATA

ADT =
ADT =
DHV = %
D = %
T = % *
V = 30 MPH
* TTST =
* DUAL =
FUNC CLASS =SUBDIVISION
SUB REGIONAL TIER

PROJECT LENGTH

LENGTH ROADWAY TIP PROJECT P-4405 K = 0.827 MILE
LENGTH STRUCTURE TIP PROJECT P-4405 K = 0.004 MILE
TOTAL LENGTH TIP PROJECT P-4405 K = 0.831 MILE

Prepared In the Office of:
ICA Engineering
5121 Kingdom Way, Suite 100
Raleigh, NC 27607
NC License No: P-0258

2012 STANDARD SPECIFICATIONS

RIGHT OF WAY DATE:
MARCH 11, 2015

LETTING DATE:
OCTOBER 20, 2015

DAVID C. WALLER, PE
PROJECT ENGINEER

ALEXANDER D. SNIDER, PE
PROJECT DESIGN ENGINEER

HYDRAULICS ENGINEER
SIGNATURE: P.E.

ROADWAY DESIGN ENGINEER
SIGNATURE: P.E.

NC DEPARTMENT OF TRANSPORTATION
RAIL DIVISION
PLANNING AND DEVELOPMENT

1/23/2015
R:\Roadway\Proj\p4405k_rdy_tsh.dgn
ICA ENGINEERING, INC.

PROJECT REFERENCE NO.	SHEET NO.
P-4405 K	1-B

Note: Not to Scale

****S.U.E. = Subsurface Utility Engineering***

STATE OF NORTH CAROLINA
DIVISION OF HIGHWAYS

CONVENTIONAL PLAN SHEET SYMBOLS

BOUNDARIES AND PROPERTY:

- State Line
- County Line
- Township Line
- City Line
- Reservation Line
- Property Line
- Existing Iron Pin — EIP
- Property Corner
- Property Monument — ECM
- Parcel/Sequence Number — 123
- Existing Fence Line
- Proposed Woven Wire Fence
- Proposed Chain Link Fence
- Proposed Barbed Wire Fence
- Existing Wetland Boundary — WLB
- Proposed Wetland Boundary — WLB
- Existing Endangered Animal Boundary — EAB
- Existing Endangered Plant Boundary — EPB
- Known Soil Contamination: Area or Site
- Potential Soil Contamination: Area or Site

BUILDINGS AND OTHER CULTURE:

- Gas Pump Vent or U/G Tank Cap
- Sign — S
- Well — W
- Small Mine
- Foundation
- Area Outline
- Cemetery
- Building
- School
- Church
- Dam

HYDROLOGY:

- Stream or Body of Water
- Hydro, Pool or Reservoir
- Jurisdictional Stream — JS
- Buffer Zone 1 — BZ 1
- Buffer Zone 2 — BZ 2
- Flow Arrow
- Disappearing Stream
- Spring
- Wetland
- Proposed Lateral, Tail, Head Ditch — FLOW
- False Sump

RAILROADS:

- Standard Gauge — CSX TRANSPORTATION
- RR Signal Milepost — MILEPOST 35
- Switch — SWITCH
- RR Abandoned
- RR Dismantled

RIGHT OF WAY:

- Baseline Control Point
- Existing Right of Way Marker
- Existing Right of Way Line
- Proposed Right of Way Line — RW
- Proposed Right of Way Line with Iron Pin and Cap Marker — RW
- Proposed Right of Way Line with Concrete or Granite Marker — RW
- Existing Control of Access — CA
- Proposed Control of Access — CA
- Existing Easement Line — E
- Proposed Temporary Construction Easement — E
- Proposed Temporary Drainage Easement — TDE
- Proposed Permanent Drainage Easement — PDE
- Proposed Permanent Drainage / Utility Easement — DUE
- Proposed Permanent Utility Easement — PUE
- Proposed Temporary Utility Easement — TUE
- Proposed Aerial Utility Easement — AUE
- Proposed Permanent Easement with Iron Pin and Cap Marker

ROADS AND RELATED FEATURES:

- Existing Edge of Pavement
- Existing Curb
- Proposed Slope Stakes Cut — C
- Proposed Slope Stakes Fill — F
- Proposed Curb Ramp — CR
- Existing Metal Guardrail
- Proposed Guardrail
- Existing Cable Guiderail
- Proposed Cable Guiderail
- Equality Symbol
- Pavement Removal

VEGETATION:

- Single Tree
- Single Shrub
- Hedge
- Woods Line
- Orchard
- Vineyard — Vineyard

EXISTING STRUCTURES:

MAJOR:

- Bridge, Tunnel or Box Culvert — CONC
- Bridge Wing Wall, Head Wall and End Wall — CONC WW

MINOR:

- Head and End Wall — CONC HW
- Pipe Culvert
- Footbridge
- Drainage Box: Catch Basin, DI or JB — CB
- Paved Ditch Gutter
- Storm Sewer Manhole — S
- Storm Sewer — S

UTILITIES:

POWER:

- Existing Power Pole
- Proposed Power Pole
- Existing Joint Use Pole
- Proposed Joint Use Pole
- Power Manhole — P
- Power Line Tower
- Power Transformer
- U/G Power Cable Hand Hole
- H-Frame Pole
- Recorded U/G Power Line — P
- Designated U/G Power Line (S.U.E.*) — P

TELEPHONE:

- Existing Telephone Pole
- Proposed Telephone Pole
- Telephone Manhole — T
- Telephone Booth
- Telephone Pedestal — T
- Telephone Cell Tower
- U/G Telephone Cable Hand Hole
- Recorded U/G Telephone Cable — T
- Designated U/G Telephone Cable (S.U.E.*) — T
- Recorded U/G Telephone Conduit — TC
- Designated U/G Telephone Conduit (S.U.E.*) — TC
- Recorded U/G Fiber Optics Cable — T FO
- Designated U/G Fiber Optics Cable (S.U.E.*) — T FO

WATER:

- Water Manhole — W
- Water Meter
- Water Valve
- Water Hydrant
- Recorded U/G Water Line — W
- Designated U/G Water Line (S.U.E.*) — W
- Above Ground Water Line — A/G Water

TV:

- TV Satellite Dish
- TV Pedestal — C
- TV Tower
- U/G TV Cable Hand Hole — HH
- Recorded U/G TV Cable — TV
- Designated U/G TV Cable (S.U.E.*) — TV
- Recorded U/G Fiber Optic Cable — TV FO
- Designated U/G Fiber Optic Cable (S.U.E.*) — TV FO

GAS:

- Gas Valve
- Gas Meter
- Recorded U/G Gas Line — G
- Designated U/G Gas Line (S.U.E.*) — G
- Above Ground Gas Line — A/G Gas

SANITARY SEWER:

- Sanitary Sewer Manhole
- Sanitary Sewer Cleanout
- U/G Sanitary Sewer Line — SS
- Above Ground Sanitary Sewer — A/G Sanitary Sewer
- Recorded SS Forced Main Line — FSS
- Designated SS Forced Main Line (S.U.E.*) — FSS

MISCELLANEOUS:

- Utility Pole
- Utility Pole with Base
- Utility Located Object
- Utility Traffic Signal Box — S
- Utility Unknown U/G Line — ?UTL
- U/G Tank; Water, Gas, Oil
- Underground Storage Tank, Approx. Loc.
- A/G Tank; Water, Gas, Oil
- Geoenvironmental Boring
- U/G Test Hole (S.U.E.*)
- Abandoned According to Utility Records — AATUR
- End of Information — E.O.I.

PROJECT REFERENCE NO.	SHEET NO.
P-4405 K	2
ROADWAY DESIGN ENGINEER	PAVEMENT DESIGN ENGINEER

ICA Engineering
5121 Kingdom Way, Suite 100
Raleigh, NC 27607
NC License No: F-0258

INCOMPLETE PLANS
DO NOT USE FOR R/W ACQUISITION

PRELIMINARY PLANS
DO NOT USE FOR CONSTRUCTION

PRELIMINARY PAVEMENT SCHEDULE

C1	PROP. APPROX 2.5″ ASPHALT CONCRETE SURFACE COURSE, TYPE SF9.5A, AT AN AVERAGE RATE OF 138 LBS. PER SQ. YD. IN EACH OF TWO LAYERS.
C2	PROP. VAR. DEPTH ASPHALT CONCRETE SURFACE COURSE, TYPE SF9.5A, AT AN AVERAGE RATE OF 110 LBS. PER SQ. YD. PER 1″ DEPTH. TO BE PLACED IN LAYERS NOT TO EXCEED 2″ IN DEPTH.
E1	PROP. APPROX 4″ ASPHALT CONCRETE BASE COURSE, TYPE B25.0B, AT AN AVERAGE RATE OF 456 LBS. PER SQ. YD.
E2	PROP. VAR. DEPTH ASPHALT CONCRETE BASE COURSE, TYPE B25.0B, AT AN AVERAGE RATE OF 114 LBS. PER SQ. YD. PER 1″ DEPTH. TO BE PLACED IN LAYERS NOT TO EXCEED 5.5″ IN DEPTH.
J1	8″ AGGREGATE BASE COURSE.
P	PRIME COAT
T	EARTH MATERIAL
U	EXISTING ABC PAVEMENT
U1	EXISTING ASPALT PAVEMENT
W	VARIABLE DEPTH ASPHALT PAVEMENT (SEE STANDARD WEDGING DETAIL ON THIS PAGE.)

NOTE: PAVEMENT EDGE SLOPES ARE 1:1 UNLESS SHOWN OTHERWISE. FOR CROSSOVER AREAS, PLEASE SEE PLANS.

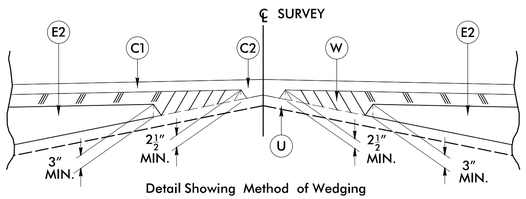

Detail Showing Method of Wedging

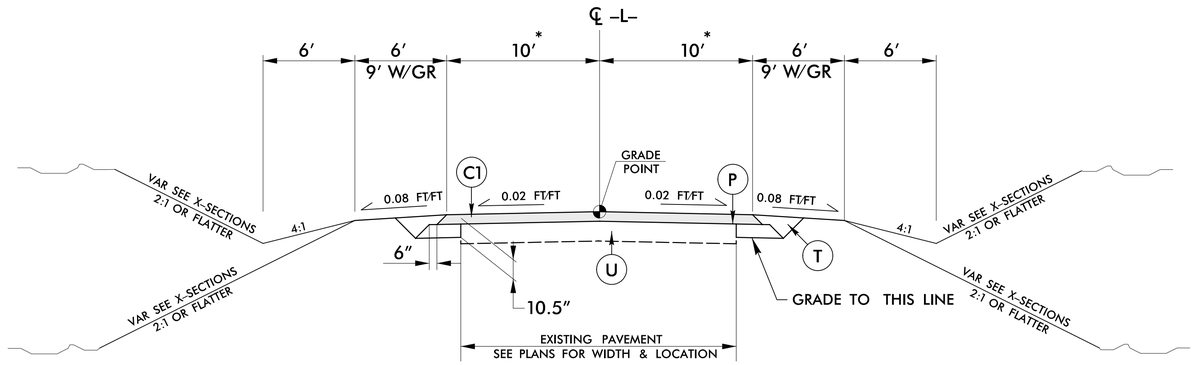

* VARIES 15′ TO 10′ FROM 10+93.64 TO 11+93.64

TYPICAL SECTION NO. 1

-L- BYRDSVILLE ROAD

USE TYPICAL SECTION NO. 1 FROM:

-L- PC 10+19.76 TO -L- POC 29+45.47

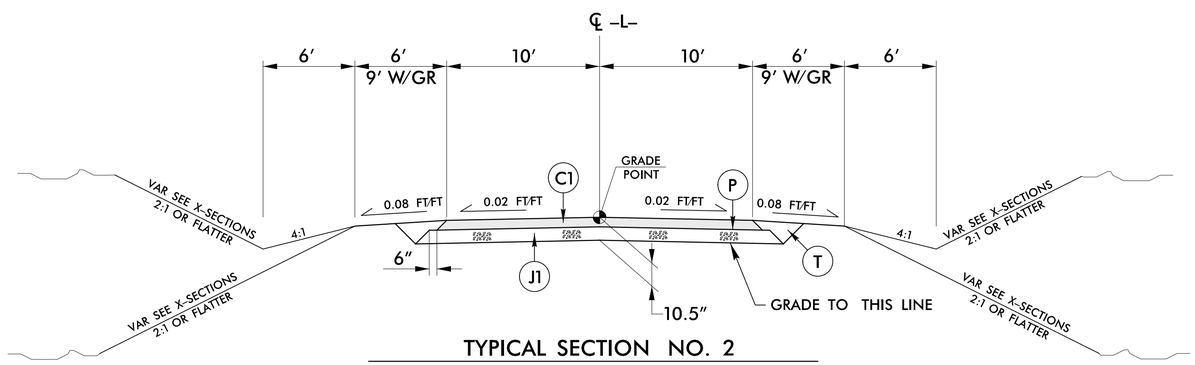

* VARIES 10′ TO 35′ FROM 53+17.17 TO 53+81.29

TYPICAL SECTION NO. 2

-L- BYRDSVILLE ROAD

USE TYPICAL SECTION NO. 2 FROM:

-L- POC 29+45.47 TO -L- POC 43+75.00
-L- POT 46+25.00 TO -L- POC 54+07.85

DGN

1/23/2015
R:\Roadway\Proj\p4405k_rdy_typ.dgn
inda.stone@ICAinc.biz

PROJECT REFERENCE NO.	SHEET NO.
P-4405 K	2-A
ROADWAY DESIGN ENGINEER	PAVEMENT DESIGN ENGINEER

ICA Engineering
5121 Kingdom Way, Suite 100
Raleigh, NC 27607
NC License No: F-0258

INCOMPLETE PLANS
DO NOT USE FOR R/W ACQUISITION

PRELIMINARY PLANS
DO NOT USE FOR CONSTRUCTION

PRELIMINARY PAVEMENT SCHEDULE

C1	PROP. APPROX 2.5" ASPHALT CONCRETE SURFACE COURSE, TYPE SF9.5A, AT AN AVERAGE RATE OF 138 LBS. PER SQ. YD. IN EACH OF TWO LAYERS.
C2	PROP. VAR. DEPTH ASPHALT CONCRETE SURFACE COURSE, TYPE SF9.5A, AT AN AVERAGE RATE OF 110 LBS. PER SQ. YD. PER 1" DEPTH. TO BE PLACED IN LAYERS NOT TO EXCEED 2" IN DEPTH.
E1	PROP. APPROX 4" ASPHALT CONCRETE BASE COURSE, TYPE B25.0B, AT AN AVERAGE RATE OF 456 LBS. PER SQ. YD.
E2	PROP. VAR. DEPTH ASPHALT CONCRETE BASE COURSE, TYPE B25.0B, AT AN AVERAGE RATE OF 114 LBS. PER SQ. YD. PER 1" DEPTH. TO BE PLACED IN LAYERS NOT TO EXCEED 5.5" IN DEPTH.
J1	8" AGGREGATE BASE COURSE.
P	PRIME COAT
T	EARTH MATERIAL
U	EXISTING ABC PAVEMENT
U1	EXISTING ASPALT PAVEMENT
W	VARIABLE DEPTH ASPHALT PAVEMENT (SEE STANDARD WEDGING DETAIL ON THIS PAGE.)

NOTE: PAVEMENT EDGE SLOPES ARE 1:1 UNLESS SHOWN OTHERWISE. FOR CROSSOVER AREAS, PLEASE SEE PLANS.

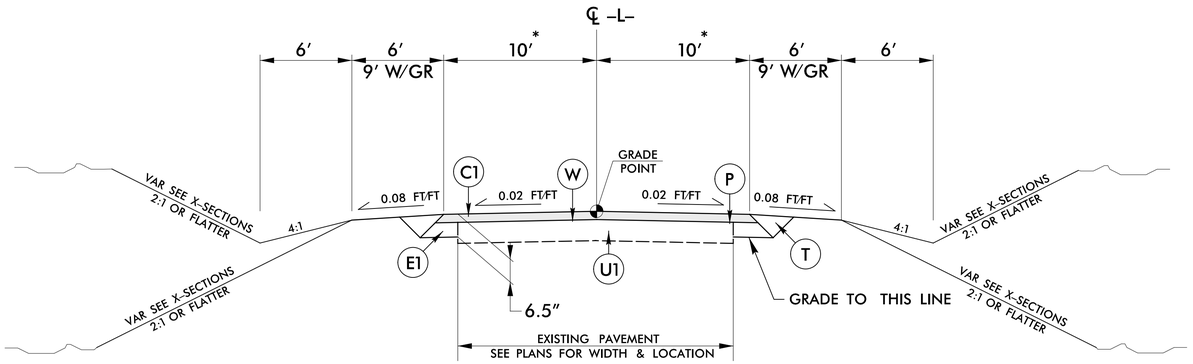

TYPICAL SECTION NO. 3
-L- BYRDSVILLE ROAD

USE TYPICAL SECTION NO. 3 FROM:
-L- POC 43+75.00 TO -L- POT 46+25.00

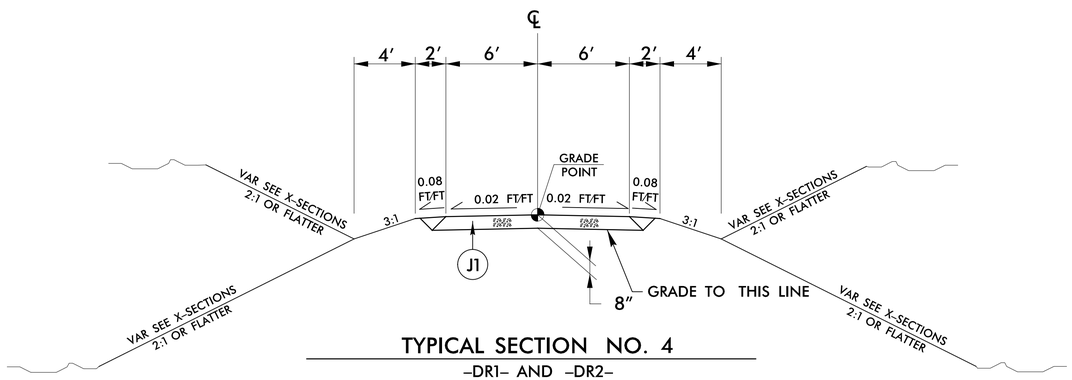

TYPICAL SECTION NO. 4
-DR1- AND -DR2-

USE TYPICAL SECTION NO. 4 FROM:
-DR1- POT 10+00.00 TO -DR1- POT 11+45.67
-DR2- POT 10+00.00 TO -DR2- POT 10+85.91

DCN

1/23/2015
R:\Roadway\Proj\p4405k_rdy_typ.dgn
ICA ENGINEERING, INC.

CROSSING CLOSURE DETAIL

BYRDSVILLE RD

ICA Engineering
5121 Kingdom Way, Suite 100
Raleigh, NC 27607
NC License No: F-0258

PROJECT REFERENCE NO.	SHEET NO.
P-4405 K	2-B
R/W SHEET NO.	
ROADWAY DESIGN ENGINEER	HYDRAULICS ENGINEER

INCOMPLETE PLANS
DO NOT USE FOR R/W ACQUISITION

PRELIMINARY PLANS
DO NOT USE FOR CONSTRUCTION

DETAIL B
STANDARD 'V' DITCH
(Not to Scale)

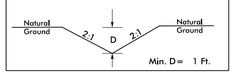

STA. 13+07 -Y- RT

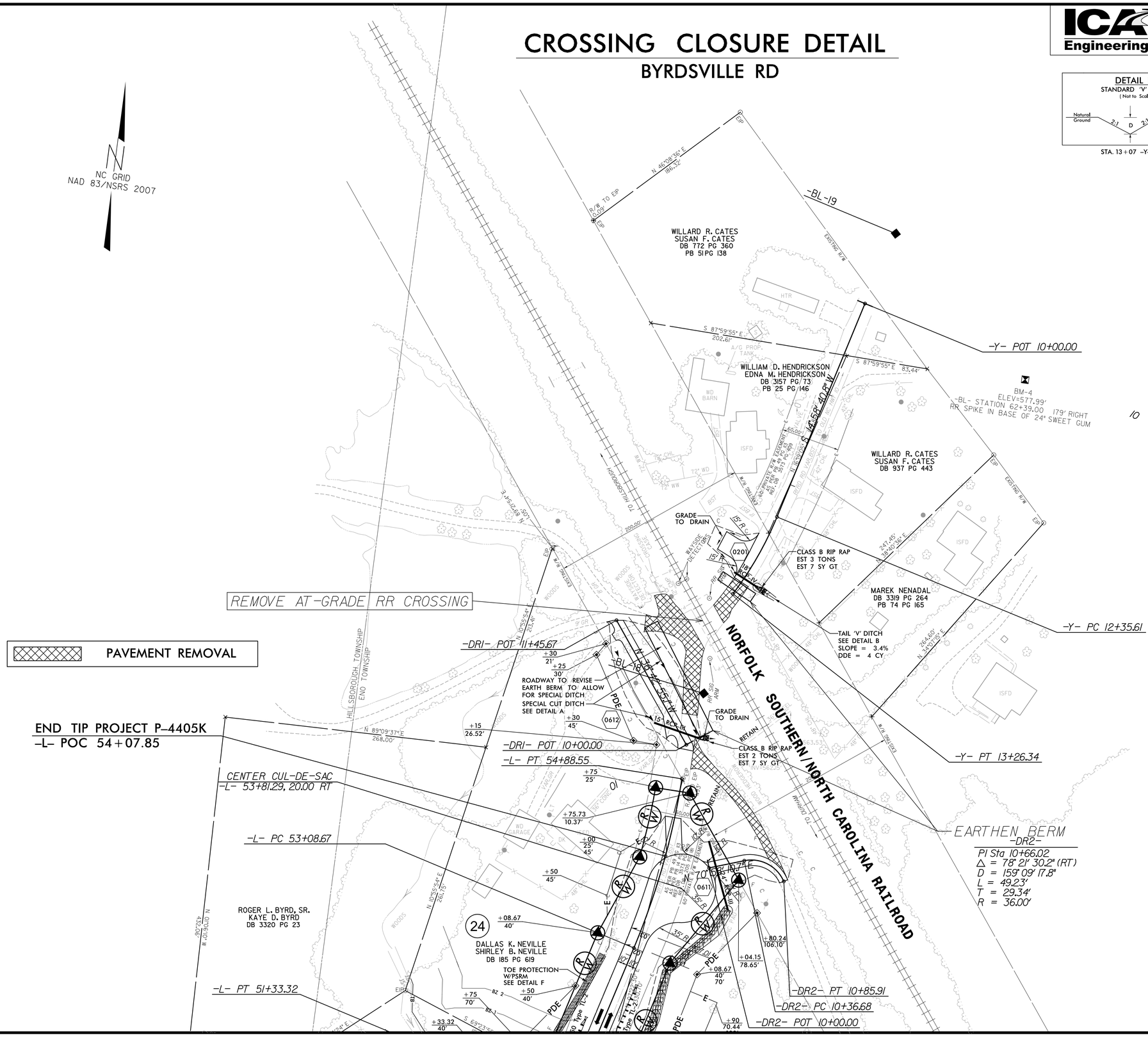

FOR -L- PROFILE, SEE SHEET 10
FOR -DR1- PROFILE, SEE SHEET 11
FOR -DR2- PROFILE, SEE SHEET 11

DGN

REVISIONS

1/23/2015
ICA\Design\P-4405k_rdy_psh02B.dgn

COMPUTED BY: ADS DATE: 10/23/2014
CHECKED BY: DCW DATE: 10/23/2014

STATE OF NORTH CAROLINA
DIVISION OF HIGHWAYS

PROJECT REFERENCE NO.	SHEET NO.
P-4405 K	3-A

SUMMARY OF EARTHWORK
IN CUBIC YARDS

STATION	STATION	UNCL. EXCAV.	EMBANK. +%	BORROW	WASTE
-L- 10+00.00	-L- 31+00.00	1982	1843		139
-L- 31+00.00	-L- 51+50.00	1477	4488	3011	
-L- 51+50.00	-L- 54+00.00	119	1590	1471	
SUBTOTALS:		3578	7921	4482	139
-DR1- 10+00.00	-DR1- 11+45.67	373	68		305
SUBTOTALS:		373	68		305
-DR2- 10+00.00	-DR2- 10+85.91	30	338	308	
SUBTOTALS:		30	338	308	
PROJECT TOTALS:				4790	444
MATERIAL FOR SHOULDER CONSTRUCTION				234	
WASTE IN LIEU OF BORROW				-444	-444
EST. 5% TO REPLACE TOP SOIL ON BORROW PIT				229	
GRAND TOTALS:		3981		4809	
SAY:		4000		4900	

Note: Approximate quantities only. Borrow Excavation, Fine Grading, Clearing and Grubbing, and Removal of Existing Pavement will be paid for at the contract lump sum price for "Grading."

DCN

1/23/2015
R:\Roadway\Proj\p4405k_rdy_psh03A.dgn
ICA ENGINEERING, INC.

PROJ. REFERENCE NO.	SHEET NO.
P-4405 K	3-B

STATE OF NORTH CAROLINA
DIVISION OF HIGHWAYS

PARCEL INDEX SHEET

PARCEL No.	SHEET No.	PROPERTY OWNER NAME
1	4	JAMES J. FREELAND & MAXINE H. FREELAND
2	4	HILLSBOROUGH CHURCH OF GOD
3	4, 5	PIEDMONT ELECTRIC MEMBERSHIP CORP.
4	4	HILLSBOROUGH CHURCH OF GOD
5	4	HILLSBOROUGH CHURCH OF GOD
6	4	HILLSBOROUGH CHURCH OF GOD
7	4	HILLSBOROUGH CHURCH OF GOD
8	4	JAMES A. GOOCH
9	4	LARRY W. WHITE JR. & JEFFERY A. WHITE
10	4	RICKY W. FLETCHER
11	4	JAMES M. RAY
12	5	MICOL PROPERTIES, LLC
13	5	ALFONSO N. GALEANA
14	5	ERNEST W. COUCH JR.
15	5	JESUS A. MINTA GALVEZ & NOE SALGADO ALVARADO
16	5, 6	DUKE UNIVERSITY SCHOOL OF FORESTRY
17	5	VIRGINIA TAYLOR
18	5	ROBERT E. REINHEIMER & PATRICIA M. REINHEIMER
19	5, 6	WILLARD R. CATES & SUSAN F. CATES
20	5, 6	WILLARD R. CATES & SUSAN F. CATES
21	6	WILLARD R. CATES & SUSAN F. CATES
22	6	WILLARD R. CATES & SUSAN F. CATES
23	6	WANDA D. BYRD
24	6	DALLAS K. NEVILLE & SHIRLEY B. NEVILLE
25	6	DALLAS K. NEVILLE, SHIRLEY B. NEVILLE, DEAN K NEVILLE, & WANDA J. NEVILLE

PARCEL No.	SHEET No.	PROPERTY OWNER NAME

PROJECT REFERENCE NO.	SHEET NO.
P-4405 K	4
R/W SHEET NO.	
ROADWAY DESIGN ENGINEER	HYDRAULICS ENGINEER

ICA Engineering
5121 Kingdom Way, Suite 100
Raleigh, NC 27607
NC License No: F-0258

INCOMPLETE PLANS
DO NOT USE FOR R/W ACQUISITION

PRELIMINARY PLANS
DO NOT USE FOR CONSTRUCTION

REVISIONS

DGN

DETAIL A
SPECIAL CUT DITCH
(Not to Scale)

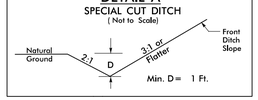

FROM STA. 10+80 TO STA. 11+50 -L- RT
FROM STA. 15+35 TO STA. 16+82 -L- RT
FROM STA. 15+80 TO STA. 17+15 -L- LT
FROM STA. 20+50 TO STA. 21+50 -L- RT
FROM STA. 22+50 TO STA. 23+50 -L- LT
FROM STA. 23+50 TO STA. 24+36 -L- RT

DETAIL J
STANDARD 'V' DITCH
(Not to Scale)

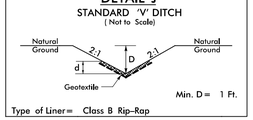

Type of Liner= Class B Rip-Rap

STA. 15+40 -L- LT

DETAIL C
SPECIAL CUT DITCH
(Not to Scale)

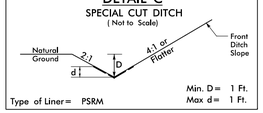

Type of Liner= PSRM

FROM STA. 14+50 TO STA.15+35 -L- RT
FROM STA. 16+82 TO STA. 17+50 -L- RT
FROM STA. 24+36 TO STA. 25+00 -L- RT

-L-

PI Sta 10+53.30
Δ = 37° 05' 12.9" (RT)
D = 57° 17' 44.8"
L = 64.73'
T = 33.54'
R = 100.00'

PI Sta 11+16.02
Δ = 7° 13' 02.0" (RT)
D = 11° 27' 33.0"
L = 62.98'
T = 31.53'
R = 500.00'

PI Sta 15+19.76
Δ = 4° 04' 37.2" (RT)
D = 1° 25' 56.6"
L = 284.63'
T = 142.37'
R = 4,000.00'

PI Sta 17+58.85
Δ = 94° 11' 24.4" (LT)
D = 63° 39' 43.1"
L = 147.95'
T = 96.83'
R = 90.00'

DESIGN EXCEPTION REQUIRED

PI Sta 18+97.79
Δ = 10° 02' 16.0" (RT)
D = 5° 43' 46.5"
L = 175.19'
T = 87.82'
R = 1,000.00'

PI Sta 23+67.67
Δ = 89° 21' 51.2" (RT)
D = 52° 05' 13.5"
L = 171.57'
T = 108.79'
R = 110.00'

DESIGN EXCEPTION REQUIRED

NC GRID
NAD 83/NSRS 2007

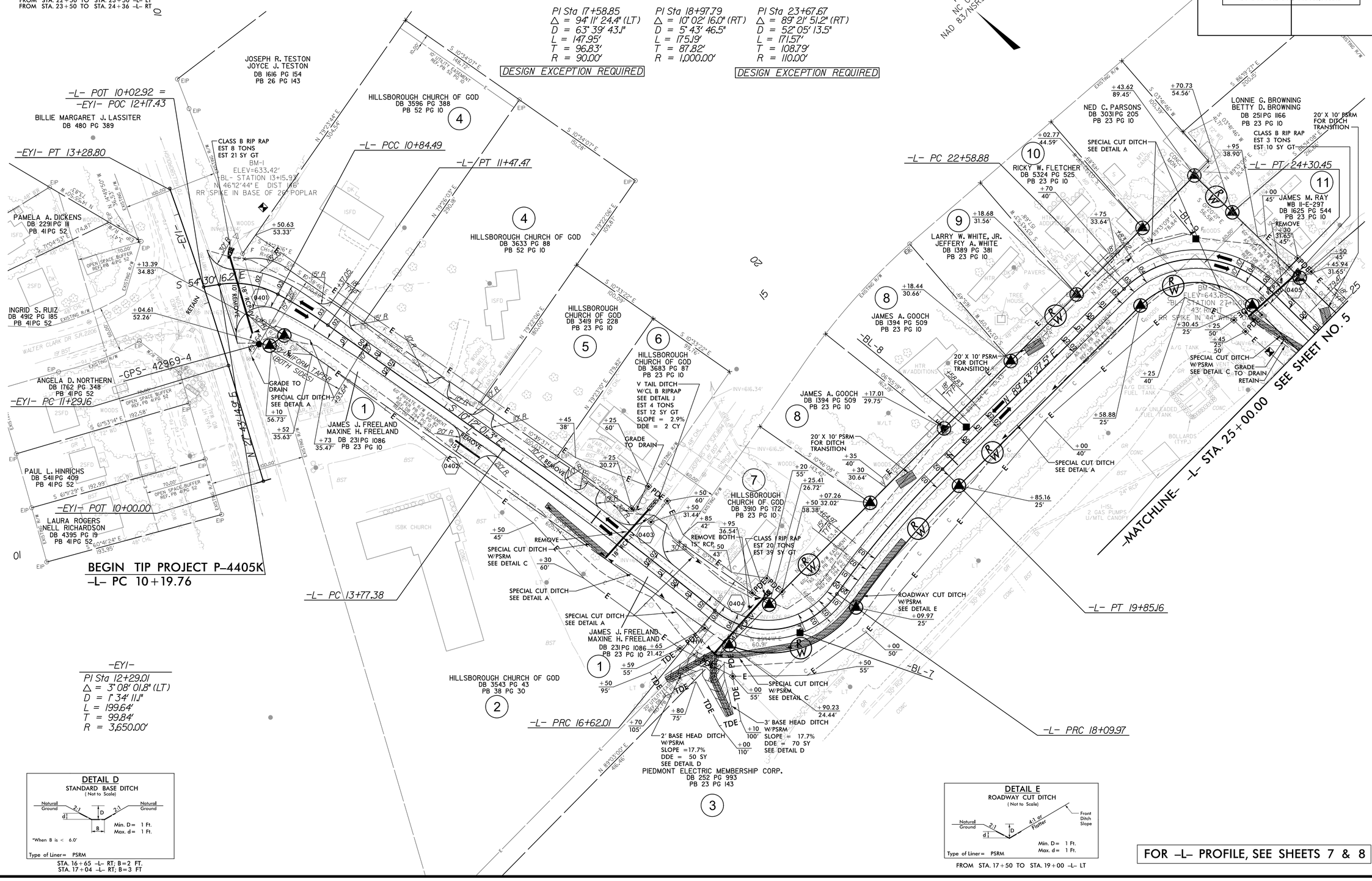

-EY1-

PI Sta 12+29.01
Δ = 3° 08' 01.8" (LT)
D = 1° 34' 11.1"
L = 199.64'
T = 99.84'
R = 3,650.00'

DETAIL D
STANDARD BASE DITCH
(Not to Scale)

*When B is < 6.0'

Type of Liner= PSRM

STA. 16+65 -L- RT; B=2 FT.
STA. 17+04 -L- RT; B=3 FT

DETAIL E
ROADWAY CUT DITCH
(Not to Scale)

Type of Liner= PSRM

FROM STA. 17+50 TO STA. 19+00 -L- LT

FOR -L- PROFILE, SEE SHEETS 7 & 8

K:\23\2015
H:\PROJECTS\P-4405K_rdy_psh04.dgn

ICA Engineering
5121 Kingdom Way, Suite 100
Raleigh, NC 27607
NC License No: F-0258

PROJECT REFERENCE NO.	SHEET NO.
P-4405 K	5
R/W SHEET NO.	
ROADWAY DESIGN ENGINEER	HYDRAULICS ENGINEER

INCOMPLETE PLANS
DO NOT USE FOR R/W ACQUISITION
PRELIMINARY PLANS
DO NOT USE FOR CONSTRUCTION

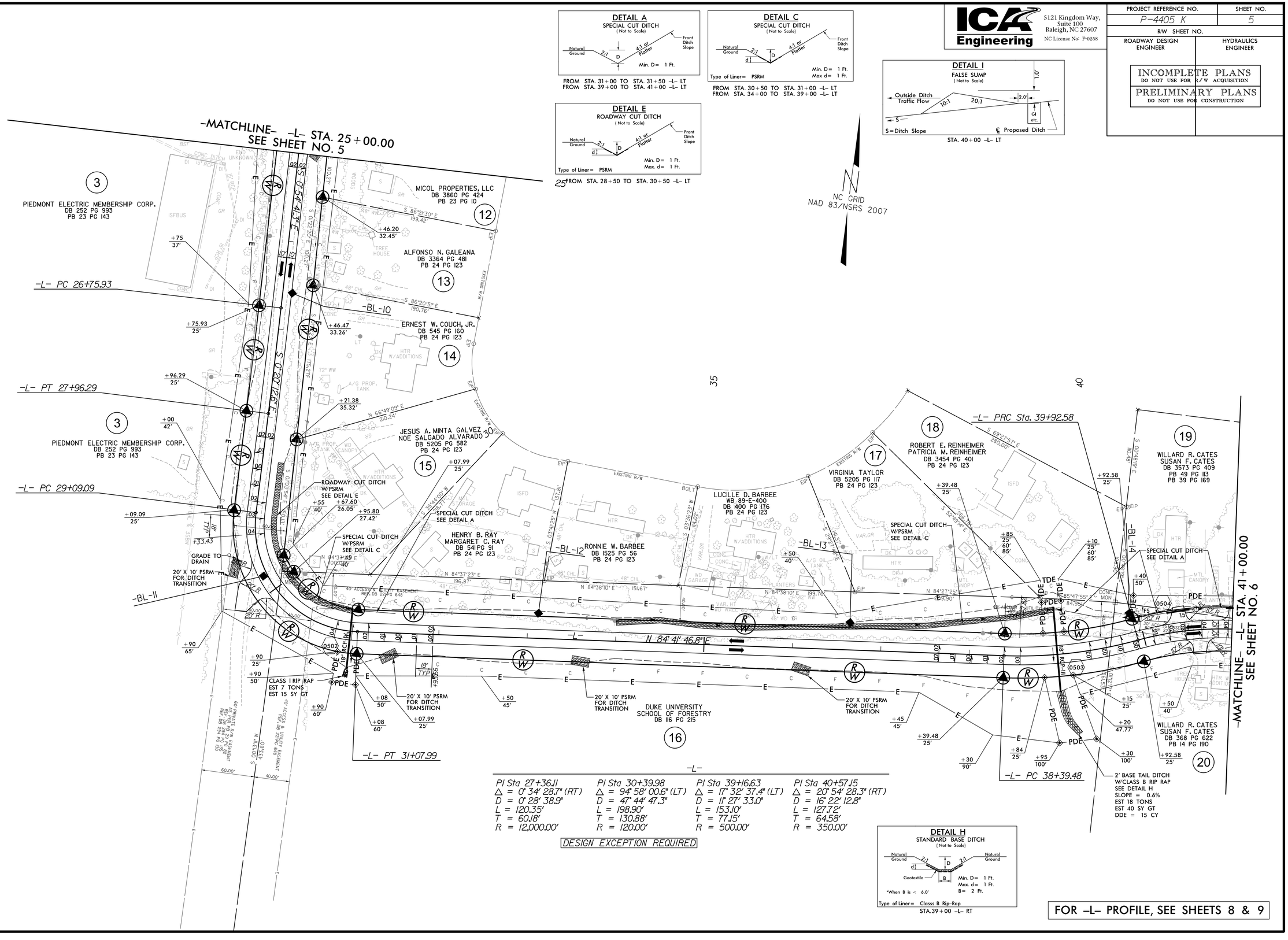

FOR -L- PROFILE, SEE SHEETS 8 & 9

REVISIONS

DCN

1/23/2015
R:\Roadway\Proj\p4405k_rdy_psh05.dgn
ICA ENGINEERING, INC.

ICA Engineering
5121 Kingdom Way, Suite 100
Raleigh, NC 27607
NC License No: F-0258

PROJECT REFERENCE NO.	SHEET NO.
P-4405 K	6
R/W SHEET NO.	
ROADWAY DESIGN ENGINEER	HYDRAULICS ENGINEER

INCOMPLETE PLANS
DO NOT USE FOR R/W ACQUISITION
PRELIMINARY PLANS
DO NOT USE FOR CONSTRUCTION

FOR -L- PROFILE, SEE SHEETS 9 & 10
FOR -DR1- PROFILE, SEE SHEET 11
FOR -DR2- PROFILE, SEE SHEET 11

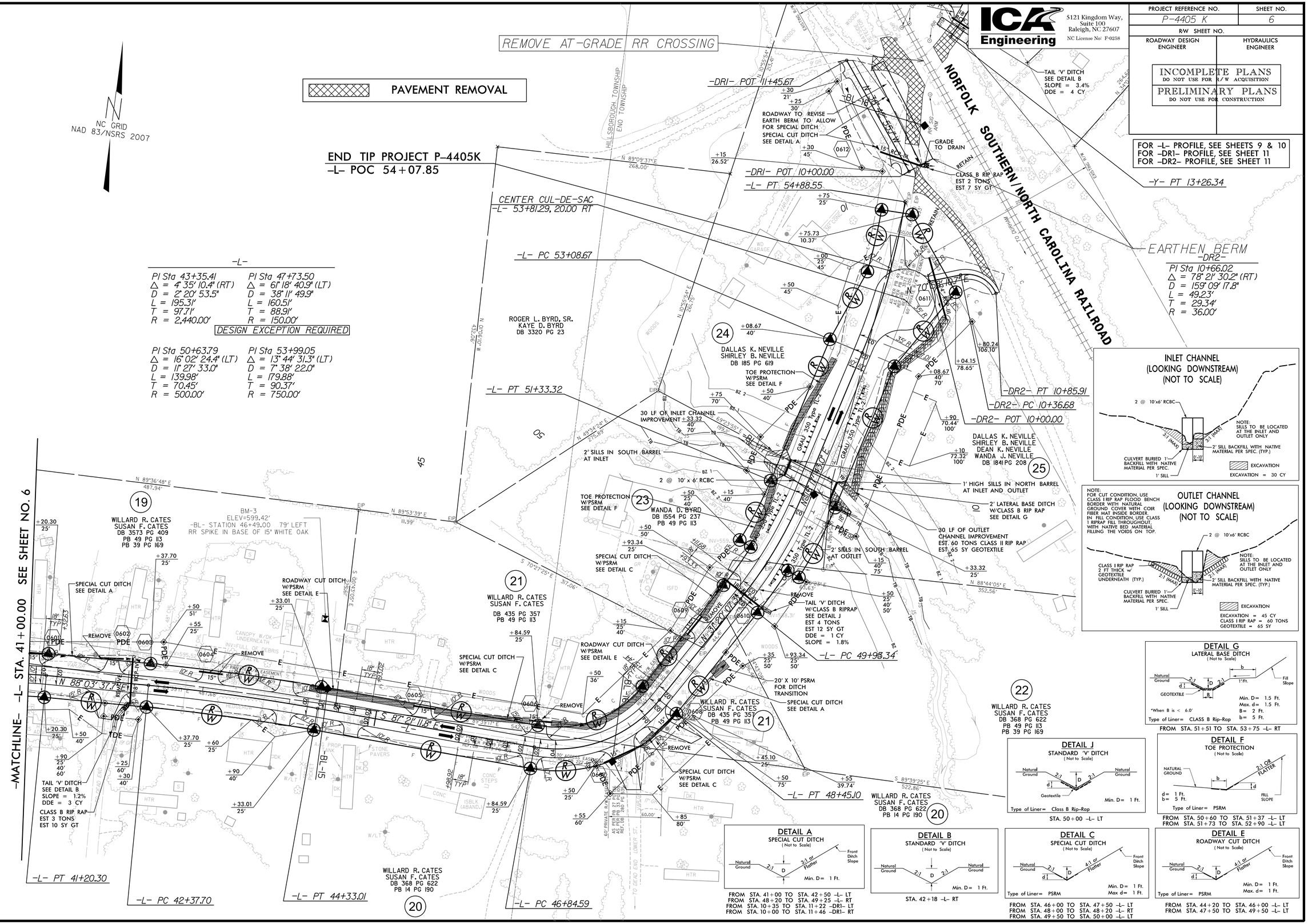

REVISIONS

DGN

K:\23\2015
ICA Engineering\P-4405K_rdy_psh06.dgn

ICA Engineering
5121 Kingdom Way, Suite 100
Raleigh, NC 27607
NC License No: F-0258

PROJECT REFERENCE NO.	SHEET NO.
P-4405 K	7
ROADWAY DESIGN ENGINEER	HYDRAULICS ENGINEER

INCOMPLETE PLANS
DO NOT USE FOR R/W ACQUISITION

PRELIMINARY PLANS
DO NOT USE FOR CONSTRUCTION

DGN

REVISIONS

BM #1
RR SPIKE IN BASE 26" POPLAR
-L- STA 10+53 OFFSET 84' LT
ELEV = 633.42

PIPE HYDRAULIC DATA
Sta.10+09 -L- 18" RCP (EXISTING)

DRAINAGE AREA	=	2	AC
DESIGN FREQUENCY	=	50	YRS
DESIGN DISCHARGE	=	8	CFS
DESIGN HW ELEVATION	=	638.5	FT
100 YEAR DISCHARGE	=	8	CFS
100 YEAR HW ELEVATION	=	638.5	FT
OVERTOPPING FREQUENCY	=	500+	YRS
OVERTOPPING DISCHARGE	=	16	CFS
OVERTOPPING ELEVATION	=	640.2	FT

PIPE HYDRAULIC DATA
Sta.16+93 -L- 42" RCP

DRAINAGE AREA	=	18	AC
DESIGN FREQUENCY	=	25	YRS
DESIGN DISCHARGE	=	55	CFS
DESIGN HW ELEVATION	=	630.2	FT
100 YEAR DISCHARGE	=	60	CFS
100 YEAR HW ELEVATION	=	630.6	FT
OVERTOPPING FREQUENCY	=	100+	YRS
OVERTOPPING DISCHARGE	=	73	CFS
OVERTOPPING ELEVATION	=	631.6	FT

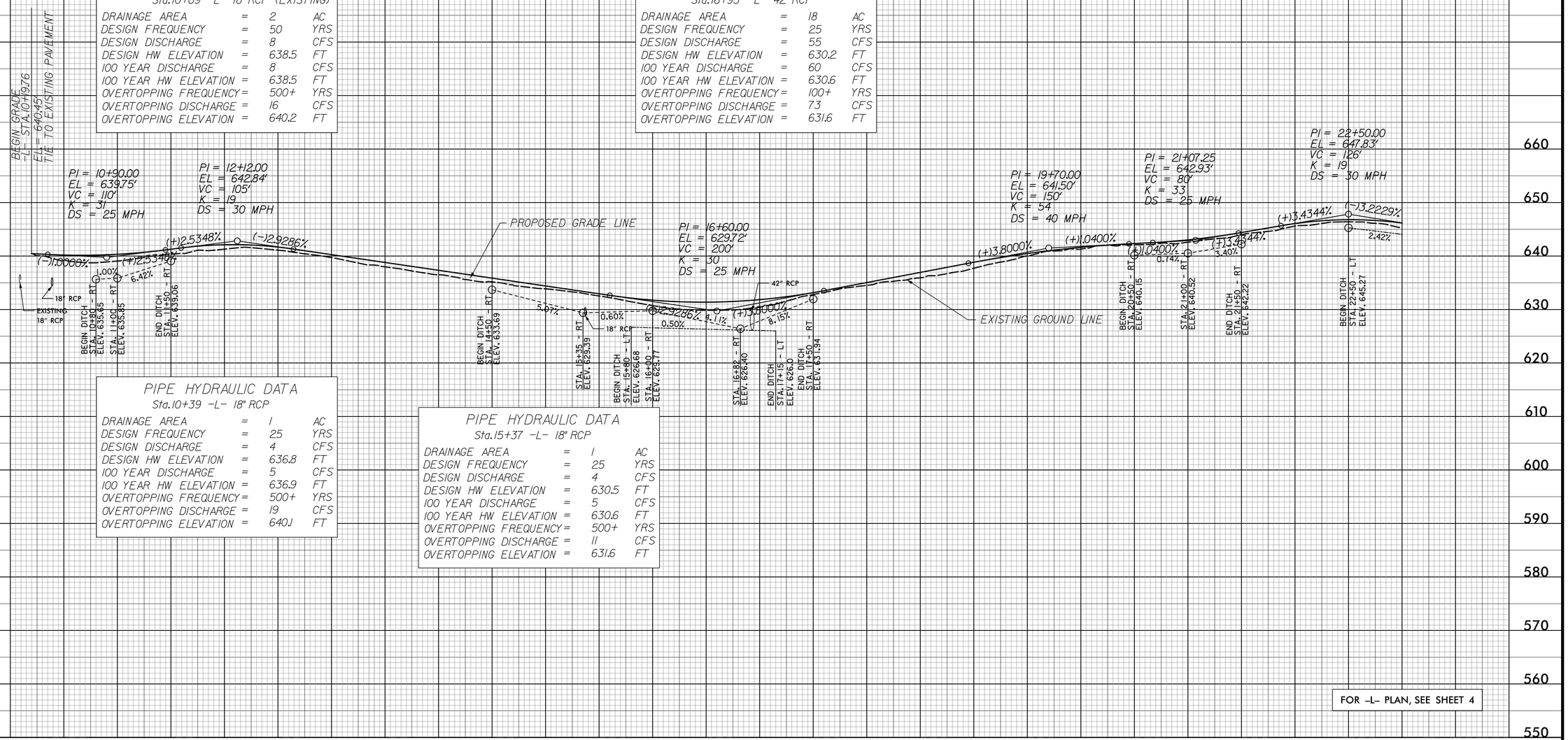

PIPE HYDRAULIC DATA
Sta.10+39 -L- 18" RCP

DRAINAGE AREA	=	1	AC
DESIGN FREQUENCY	=	25	YRS
DESIGN DISCHARGE	=	4	CFS
DESIGN HW ELEVATION	=	636.8	FT
100 YEAR DISCHARGE	=	5	CFS
100 YEAR HW ELEVATION	=	636.9	FT
OVERTOPPING FREQUENCY	=	500+	YRS
OVERTOPPING DISCHARGE	=	19	CFS
OVERTOPPING ELEVATION	=	640.1	FT

PIPE HYDRAULIC DATA
Sta.15+37 -L- 18" RCP

DRAINAGE AREA	=	1	AC
DESIGN FREQUENCY	=	25	YRS
DESIGN DISCHARGE	=	4	CFS
DESIGN HW ELEVATION	=	630.5	FT
100 YEAR DISCHARGE	=	5	CFS
100 YEAR HW ELEVATION	=	630.6	FT
OVERTOPPING FREQUENCY	=	500+	YRS
OVERTOPPING DISCHARGE	=	11	CFS
OVERTOPPING ELEVATION	=	631.6	FT

FOR -L- PLAN, SEE SHEET 4

1/23/2015
11:04:14 AM
C:\Users\kbrown\Pro\P4405k_rdy_pf107.dgn

ICA Engineering
5121 Kingdom Way, Suite 100
Raleigh, NC 27607
NC License No: F-0258

PROJECT REFERENCE NO.	SHEET NO.
P-4405 K	8
ROADWAY DESIGN ENGINEER	HYDRAULICS ENGINEER

INCOMPLETE PLANS
DO NOT USE FOR R/W ACQUISITION

PRELIMINARY PLANS
DO NOT USE FOR CONSTRUCTION

DGN

REVISIONS

BM #2
RR SPIKE IN BASE 44" WHITE OAK
-L- STA 24+79 OFFSET 47' RT
ELEV = 643.63

PIPE HYDRAULIC DATA
Sta. 24+38 -L- 18" RCP

DRAINAGE AREA	=	1	AC
DESIGN FREQUENCY	=	25	YRS
DESIGN DISCHARGE	=	4	CFS
DESIGN HW ELEVATION	=	639.5	FT
100 YEAR DISCHARGE	=	4	CFS
100 YEAR HW ELEVATION	=	639.7	FT
OVERTOPPING FREQUENCY	=	500+	YRS
OVERTOPPING DISCHARGE	=	20	CFS
OVERTOPPING ELEVATION	=	644.8	FT

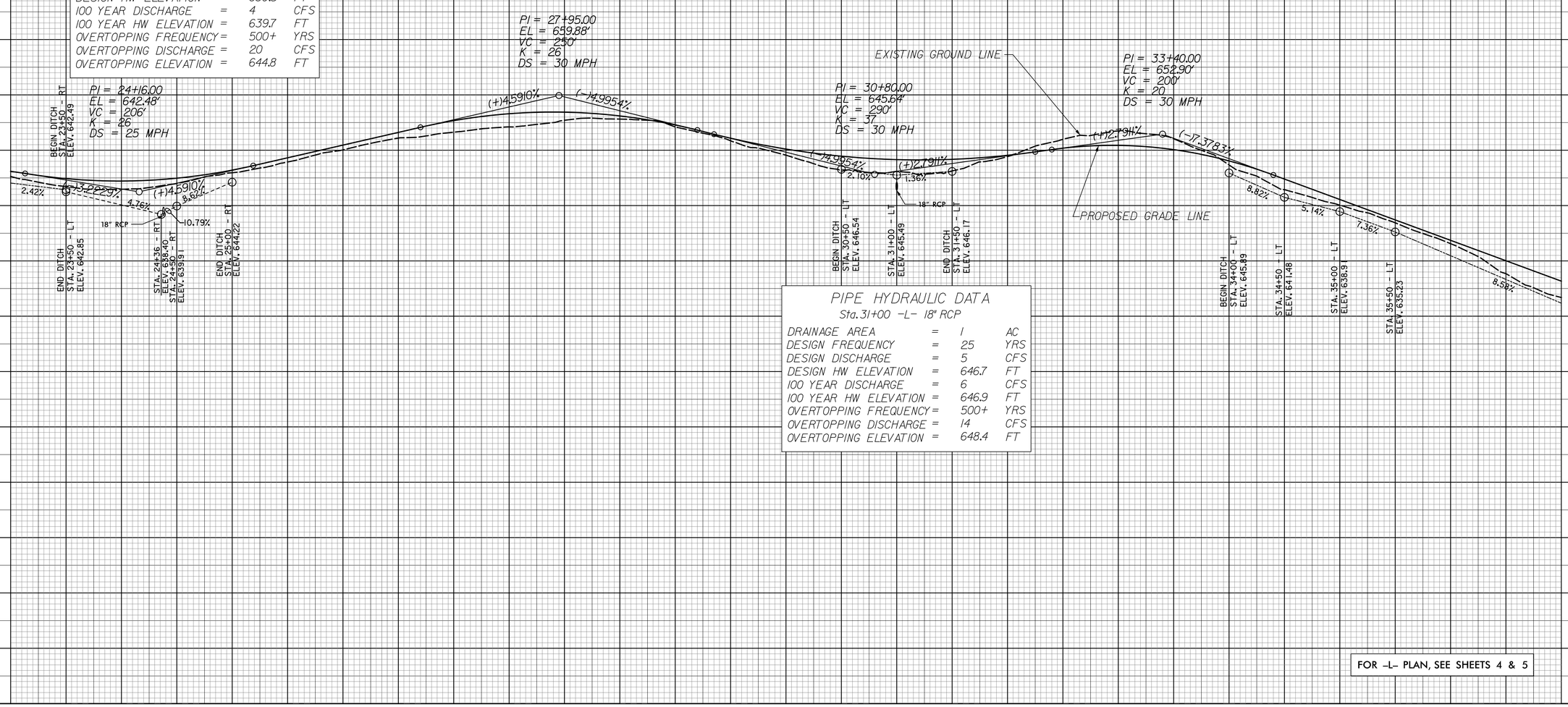

PIPE HYDRAULIC DATA
Sta. 31+00 -L- 18" RCP

DRAINAGE AREA	=	1	AC
DESIGN FREQUENCY	=	25	YRS
DESIGN DISCHARGE	=	5	CFS
DESIGN HW ELEVATION	=	646.7	FT
100 YEAR DISCHARGE	=	6	CFS
100 YEAR HW ELEVATION	=	646.9	FT
OVERTOPPING FREQUENCY	=	500+	YRS
OVERTOPPING DISCHARGE	=	14	CFS
OVERTOPPING ELEVATION	=	648.4	FT

FOR -L- PLAN, SEE SHEETS 4 & 5

1/23/2015
H:\Projects\Proj\P4405k_rdy_pf108.dgn

ICA Engineering
5121 Kingdom Way, Suite 100
Raleigh, NC 27607
NC License No: F-0258

PROJECT REFERENCE NO.	SHEET NO.
P-4405 K	9
ROADWAY DESIGN ENGINEER	HYDRAULICS ENGINEER

INCOMPLETE PLANS
DO NOT USE FOR R/W ACQUISITION

PRELIMINARY PLANS
DO NOT USE FOR CONSTRUCTION

DGN

REVISIONS

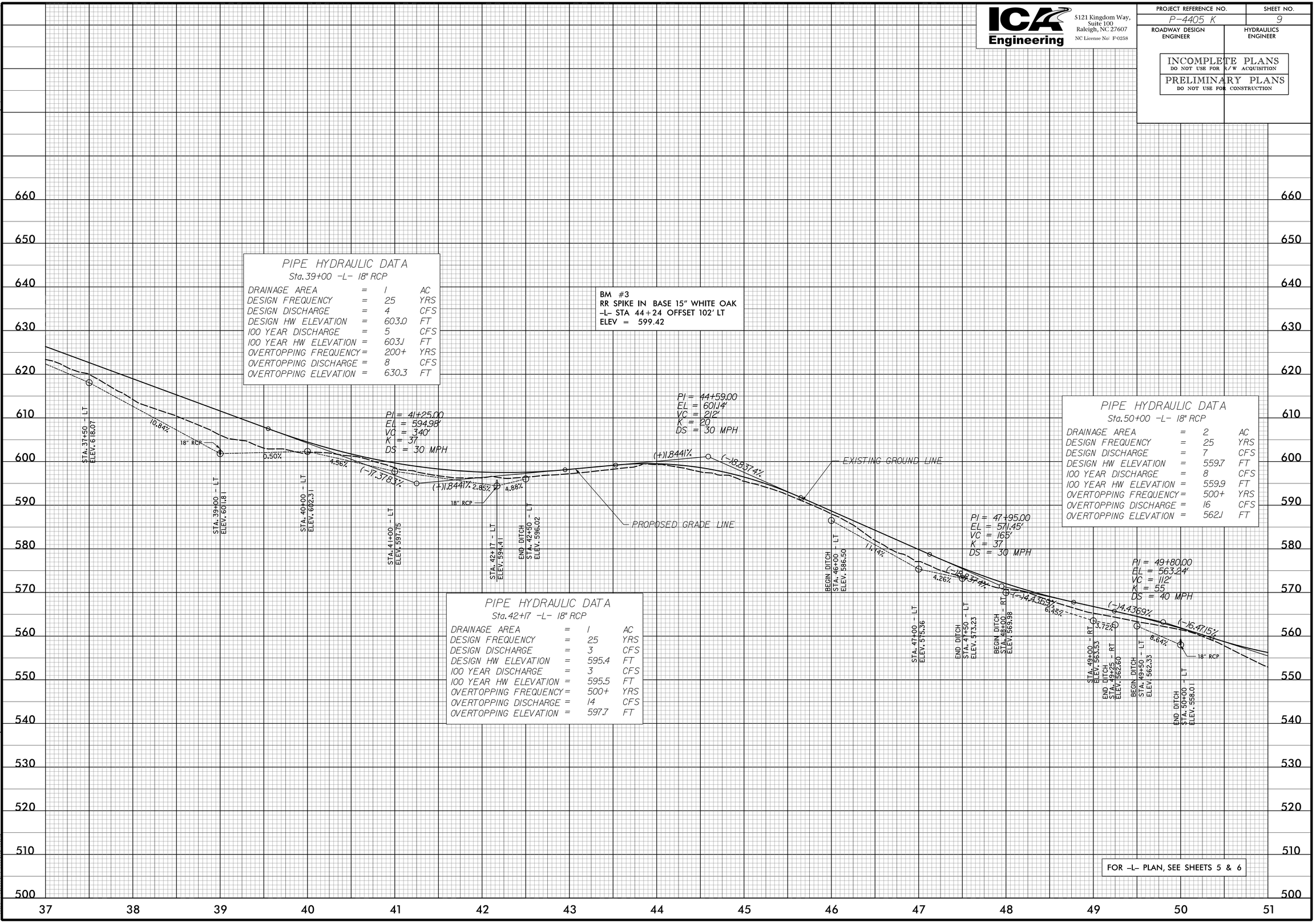

PIPE HYDRAULIC DATA
Sta. 39+00 -L- 18" RCP

DRAINAGE AREA	=	1	AC
DESIGN FREQUENCY	=	25	YRS
DESIGN DISCHARGE	=	4	CFS
DESIGN HW ELEVATION	=	603.0	FT
100 YEAR DISCHARGE	=	5	CFS
100 YEAR HW ELEVATION	=	603.1	FT
OVERTOPPING FREQUENCY	=	200+	YRS
OVERTOPPING DISCHARGE	=	8	CFS
OVERTOPPING ELEVATION	=	630.3	FT

BM #3
RR SPIKE IN BASE 15" WHITE OAK
-L- STA 44+24 OFFSET 102' LT
ELEV = 599.42

PIPE HYDRAULIC DATA
Sta. 50+00 -L- 18" RCP

DRAINAGE AREA	=	2	AC
DESIGN FREQUENCY	=	25	YRS
DESIGN DISCHARGE	=	7	CFS
DESIGN HW ELEVATION	=	559.7	FT
100 YEAR DISCHARGE	=	8	CFS
100 YEAR HW ELEVATION	=	559.9	FT
OVERTOPPING FREQUENCY	=	500+	YRS
OVERTOPPING DISCHARGE	=	16	CFS
OVERTOPPING ELEVATION	=	562.1	FT

PIPE HYDRAULIC DATA
Sta. 42+17 -L- 18" RCP

DRAINAGE AREA	=	1	AC
DESIGN FREQUENCY	=	25	YRS
DESIGN DISCHARGE	=	3	CFS
DESIGN HW ELEVATION	=	595.4	FT
100 YEAR DISCHARGE	=	3	CFS
100 YEAR HW ELEVATION	=	595.5	FT
OVERTOPPING FREQUENCY	=	500+	YRS
OVERTOPPING DISCHARGE	=	14	CFS
OVERTOPPING ELEVATION	=	597.7	FT

FOR -L- PLAN, SEE SHEETS 5 & 6

K:\23/205
R:\Roadway\P-4405K_rdy_ef101.dgn
DATE: 1/14/2025

ICA Engineering
5121 Kingdom Way, Suite 100
Raleigh, NC 27607
NC License No: F-0258

PROJECT REFERENCE NO.	SHEET NO.
P-4405 K	10
ROADWAY DESIGN ENGINEER	HYDRAULICS ENGINEER

INCOMPLETE PLANS
DO NOT USE FOR R/W ACQUISITION

PRELIMINARY PLANS
DO NOT USE FOR CONSTRUCTION

DGN

REVISIONS

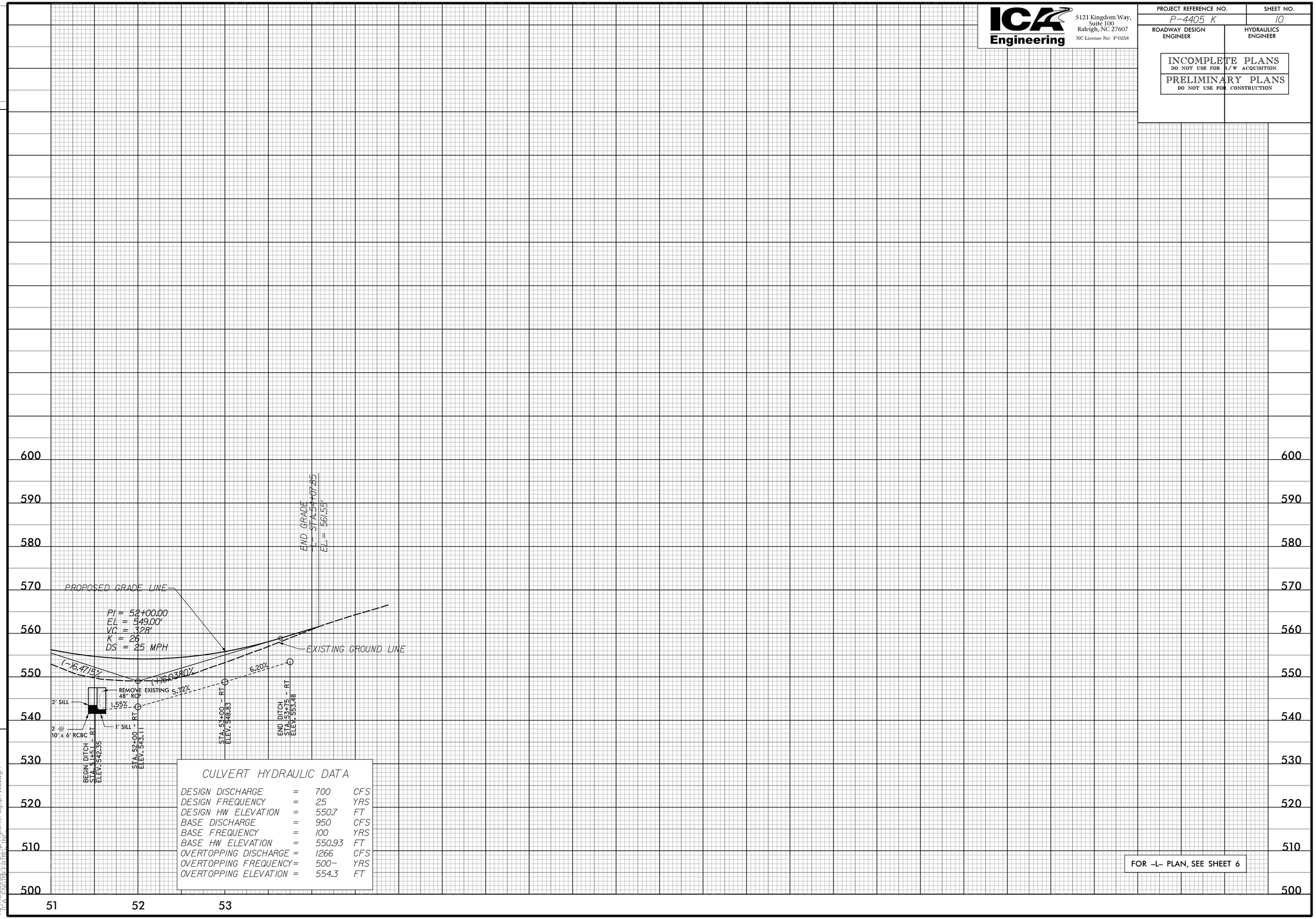

CULVERT HYDRAULIC DATA

DESIGN DISCHARGE	=	700	CFS
DESIGN FREQUENCY	=	25	YRS
DESIGN HW ELEVATION	=	550.7	FT
BASE DISCHARGE	=	950	CFS
BASE FREQUENCY	=	100	YRS
BASE HW ELEVATION	=	550.93	FT
OVERTOPPING DISCHARGE	=	1266	CFS
OVERTOPPING FREQUENCY	=	500-	YRS
OVERTOPPING ELEVATION	=	554.3	FT

FOR -L- PLAN, SEE SHEET 6

1/23/2015
R:\Roadway\Proj\p4405k_rdy_pf110.dgn
ICA ENGINEERING, INC.

ICA Engineering
5121 Kingdom Way, Suite 100
Raleigh, NC 27607
NC License No: F-0258

PROJECT REFERENCE NO.	SHEET NO.
P-4405 K	11
ROADWAY DESIGN ENGINEER	HYDRAULICS ENGINEER

PRELIMINARY PLANS
DO NOT USE FOR CONSTRUCTION

DGN

REVISIONS

-DR1-

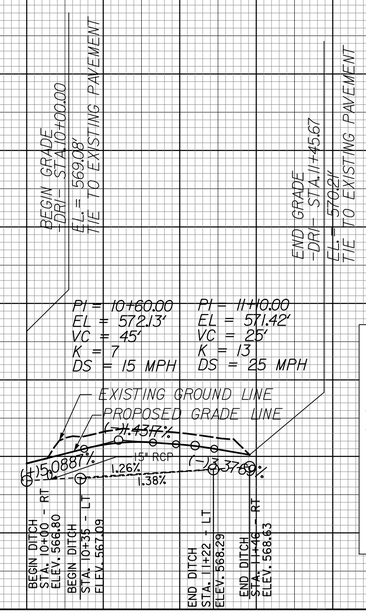

PIPE HYDRAULIC DATA
Sta.10+15 -L- 15" RCP

DRAINAGE AREA	=	0.2	AC
DESIGN FREQUENCY	=	10	YRS
DESIGN DISCHARGE	=	1	CFS
DESIGN HW ELEVATION	=	567.6	FT
100 YEAR DISCHARGE	=	1	CFS
100 YEAR HW ELEVATION	=	567.6	FT
OVERTOPPING FREQUENCY	=	500+	YRS
OVERTOPPING DISCHARGE	=	10	CFS
OVERTOPPING ELEVATION	=	570.1	FT

FOR -DR1- PLAN, SEE SHEET 6

-DR2-

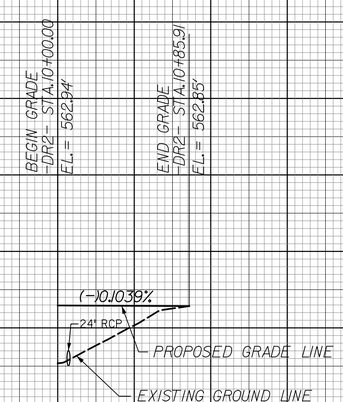

PIPE HYDRAULIC DATA
Sta.10+07 -L- 24" RCP

DRAINAGE AREA	=	5	AC
DESIGN FREQUENCY	=	25	YRS
DESIGN DISCHARGE	=	18	CFS
DESIGN HW ELEVATION	=	559.0	FT
100 YEAR DISCHARGE	=	22	CFS
100 YEAR HW ELEVATION	=	559.5	FT
OVERTOPPING FREQUENCY	=	500+	YRS
OVERTOPPING DISCHARGE	=	40	CFS
OVERTOPPING ELEVATION	=	562.9	FT

FOR -DR2- PLAN, SEE SHEET 6

1/23/2015
H:\Roadway\Proj\P4405k_rdy_pf11.dgn