**Orange County**
**Board of Commissioners**

**Agenda**

**Regular Meeting**
December 7, 2015
7:00 p.m.
Richard Whitted Meeting Facility
300 West Tryon Street
Hillsborough, NC 27278

**Note:** Background Material on all abstracts available in the Clerk's Office

**Compliance with the "Americans with Disabilities Act"** - Interpreter services and/or special sound equipment are available on request. Call the County Clerk's Office at (919) 245-2130. If you are disabled and need assistance with reasonable accommodations, contact the ADA Coordinator in the County Manager's Office at (919) 245-2300 or TDD# 644-3045.

## Board Organization

a. Election of Chair and Vice-Chair
b. Designation of Voting Delegate for all NCACC and NACo Meetings for Calendar Year December 1, 2015-2016

## Appointments

a. Manager
b. Clerk to the Board
c. County Attorney

## 1. Additions or Changes to the Agenda

**PUBLIC CHARGE**

*The Board of Commissioners pledges to the residents of Orange County its respect. The Board asks its residents to conduct themselves in a respectful, courteous manner, both with the Board and with fellow residents. At any time should any member of the Board or any resident fail to observe this public charge, the Chair will ask the offending person to leave the meeting until that individual regains personal control. Should decorum fail to be restored, the Chair will recess the meeting until such time that a genuine commitment to this public charge is observed. All electronic devices such as cell phones, pagers, and computers should please be turned off or set to silent/vibrate.*

## 2. Public Comments (Limited to One Hour)

(We would appreciate you signing the pad ahead of time so that you are not overlooked.)

a. Matters not on the Printed Agenda (Limited to One Hour – THREE MINUTE LIMIT PER SPEAKER – Written comments may be submitted to the Clerk to the Board.)

*Petitions/Resolutions/Proclamations and other similar requests submitted by the public will not be acted upon by the Board of Commissioners at the time presented. All such requests will be referred for Chair/Vice Chair/Manager review and for recommendations to the full Board at a later date regarding a) consideration of the request at a future regular Board meeting; or b) receipt of the request as information only. Submittal of information to the Board or receipt of information by the Board does not constitute approval, endorsement, or consent.*

b. Matters on the Printed Agenda
(These matters will be considered when the Board addresses that item on the agenda below.)

**3. Announcements and Petitions by Board Members (Three Minute Limit Per Commissioner)**

**4. Proclamations/ Resolutions/ Special Presentations**

a. Presentation of Excellence in Innovation Award
b. Voluntary and Enhanced Agricultural District Designation: Multiple Farms - Saier/Knapp; Griffin; Hughes/Sakiewicz; Woods; Parker; Gray/Warren; Latta; Irvin Farm; Atwater; and Durham
c. Proclamation – Bill of Rights Day
d. Proclamation - Human Rights Day, Bill of Rights Day, and Human Rights Week
e. Presentation on County Financing of Public Schools

**5. Public Hearings**

**6. Consent Agenda**

- Removal of Any Items from Consent Agenda
- Approval of Remaining Consent Agenda
- Discussion and Approval of the Items Removed from the Consent Agenda

a. Minutes
b. Motor Vehicle Property Tax Releases/Refunds
c. Property Tax Releases/Refunds
d. Applications for Property Tax Exemption/Exclusion
e. Amendment to the Orange County Code of Ordinances Regarding Agricultural Preservation Board
f. Amendment to the Orange County Code of Ordinances Regarding Massage Regulation
g. Memorandum of Agreement Renewal – Fairview Park
h. Request for Road Addition to the State Maintained Secondary Road System – Carramore Lane
i. Request for Road Addition to the State Maintained Secondary Road System – Lucas Farm Lane
j. Schools Adequate Public Facilities Ordinance (Schools APFO) – Approval of Membership and Capacity Numbers
k. Text Amendment to the Joint Planning Agreement – Revise Existing Language Regarding Transition Area Resident Representation of the Chapel Hill Planning Commission and Board of Adjustment

**7. Regular Agenda**

a. Major Subdivision Preliminary Plat Application – Henderson Woods

**8. Reports**

a. FY2015-16 First Quarter General Fund and Enterprise Funds Financial Report

**9. County Manager's Report**

**10. County Attorney's Report**

**11. Appointments**

**12. Board Comments** (Three Minute Limit Per Commissioner)

**13. Information Items**

- November 17, 2015 BOCC Meeting Follow-up Actions List
- Tax Collector's Report – Numerical Analysis
- Tax Collector's Report – Measure of Enforced Collections
- Tax Assessor's Report – Releases/Refunds under $100
- Memo Regarding Mebane Comprehensive Transportation Plan Project Including the Mattress Factory Road Interchange
- BOCC Chair Letter Regarding Petitions from November 17, 2015 Regular Meeting

**14. Closed Session**

**15. Adjournment**

*Note: Access the agenda through the County's web site, www.orangecountync.gov*

Orange County Board of Commissioners' regular meetings and work sessions are available via live streaming video at http://www.orangecountync.gov/departments/board_of_county_commissioners/videos.php and Orange County Gov-TV on channels 1301 or 97.6 (Time Warner Cable).

**ORANGE COUNTY**
**BOARD OF COMMISSIONERS**

**ACTION AGENDA ITEM ABSTRACT**
**Meeting Date:** December 7, 2015

**Action Agenda Item No.** 4-a

**SUBJECT:** Presentation of Excellence in Innovation Award

**DEPARTMENT:** Health

**PUBLIC HEARING: (Y/N)** No

**ATTACHMENT(S):**

**INFORMATION CONTACT:**

Stacy Shelp, 245-2462
Colleen Bridger, 245-2400

**PURPOSE:** To acknowledge the presentation of the Excellence in Innovation Award from the North Carolina Association of County Commissioners (NCACC) and the Local Government Federal Credit Union (LGFCU), in recognition of the Naloxone Program, to the Orange County Board of Health/Health Department and partner organizations including Orange County Emergency Services, the Carrboro Police Department, the Orange County Sheriff's Office, and the Chapel Hill Police Department.

**BACKGROUND:** The Orange County Board of Health and Health Department, in collaboration with other governmental entities, implemented a process to provide Health Department clinical staff and emergency first responders with the tools and training to carry and administer naloxone to reverse the effects of drug overdose from opioids such as prescription pain killers and heroin. To date, this effort has resulted in six (6) reversals and lives saved.

Staff submitted the Naloxone Program for potential recognition as an Excellence in Innovation award, and NCACC and LGFCU who partner in this award program selected the Program for recognition. Matt Gunnet, Membership Services Coordinator with NCACC, will present the award at the meeting to Health Department staff and others who helped implement the Program.

**FINANCIAL IMPACT:** As part of the award, the Health Department has received $1,000 from NCACC and the LGFCU.

**SOCIAL JUSTICE IMPACT:** The following Orange County Social Justice Goal is applicable to this agenda item:

- **GOAL: CREATE A SAFE COMMUNITY**
  The reduction of risks from vehicle/traffic accidents, childhood and senior injuries, gang activity, substance abuse and domestic violence.

**RECOMMENDATION(S):** The Manager recommends that the Board congratulate the Health Department and other local agencies for collaborating on the Naloxone Program and the accomplishments of this life saving effort, and that the Board express appreciation to NCACC and LGFCU for the supporting the Naloxone Program and other creative efforts across the state with Excellence in Innovation Awards.

**ORANGE COUNTY**
**BOARD OF COMMISSIONERS**

**ACTION AGENDA ITEM ABSTRACT**
**Meeting Date:** December 7, 2015

**Action Agenda Item No.** 4-b

**SUBJECT:** Voluntary and Enhanced Agricultural District Designation: Multiple Farms - Saier/Knapp; Griffin; Hughes/Sakiewicz; Woods; Parker; Gray/Warren; Latta; Irvin Farm; Atwater; and Durham

**DEPARTMENT:** DEAPR - Soil and Water Conservation

**PUBLIC HEARING: (Y/N)** No

**ATTACHMENT(S):**
1) Overall County Map
2) Applications and Maps

**INFORMATION CONTACT:**
David Stancil, 919-245-2510
Gail M. Hughes, 919-245-2753
Peter Sandbeck, 919-245-2517

**PURPOSE:** To consider applications from multiple landowners/farms to certify qualifying farmland within the Caldwell, Cane Creek/Buckhorn, High Rock/Efland, New Hope/Hillsborough, Schley/Eno, and White Cross Voluntary Agricultural Districts; and enroll the lands in the Orange County Voluntary Agricultural District (VAD) and the Enhanced Voluntary Agricultural District (EVAD) programs.

**BACKGROUND:** Orange County's Voluntary Farmland Preservation Program was started in 1992. To date, 60 farms have enrolled in the Voluntary Agricultural District (VAD) program, and the Enhanced Voluntary Agricultural District (EVAD) program, totaling 8,540 acres (rounded) in the Program.

The County's Voluntary Farmland Protection Ordinance (VFPO) outlines a procedure for the Agricultural Preservation Board to review and approve applications for qualifying farmland, and to make recommendations to the Board of Commissioners concerning the establishment and modification of agricultural districts. Section VII of the VFPO contains the requirements for inclusion in a voluntary agricultural district. <u>To be certified as qualifying farmland, a farm must:</u>

a) Be located in the unincorporated area of Orange County;
b) Be engaged in Agriculture as that word is defined in North Carolina General Statute (NCGS) 106-581.1
c) Be certified by the Natural Resources Conservation Service (NRCS) of the United States Department of Agriculture as being a farm on which at least two-thirds of the land is composed of soils that are best suited for providing food, seed, fiber, forage, timber, forestry products, horticultural crops and oil seed crops;

d) Be managed in accordance with the Natural Resources Conservation Service and NC Soil and Water Conservation Service defined erosion-control practices that are addressed to said highly-erodible land; and have a current conservation farm plan and/or forestry management plan associated with the current usages and owner; and
e) Be the subject of a non-binding conservation agreement, as defined in NCGS §121-35, between the County and the owner that prohibits non-farm use or development of such land for a period of at least ten years, except for the creation of not more than three lots that meet applicable County zoning and subdivision regulations.

At the August, September, and November 2015 meetings, the Agricultural Preservation Board reviewed the findings of the staff assessments for the attached applications for the Orange County Voluntary Agricultural District program. All farm applications were reviewed and verified to have met or exceeded the minimum criteria for certification into the program. The Agricultural Preservation Board voted unanimously to recommend approval of the certification for the ten (10) farms, including 1,855 acres of farmland, and their inclusion in the Voluntary and/or Enhanced Voluntary Agricultural District program. The certification documentation is on file in the DEAPR/Soil and Water Conservation District office. The farms are described briefly below:

**Brief Farm Descriptions**

1) Owners of the Ramble Rill Farm, Jane Saier and Darin Knapp, have submitted an application to enroll one (1) parcel of land totaling 10.01 acres as qualifying farmland for the Enhanced Voluntary Agricultural District program (EVAD) in the New Hope/Hillsborough Agricultural District. The farm operation includes various vegetables and fruit crops such as grapes, strawberries, radishes, onions, and tomatoes (to name a few) and managed woodland. The Ramble Rill Farm has been evaluated against each of the EVAD certification requirement standards and meets or exceeds all of the measures above.

2) Owners of the W & F Family Farm, LLC, Frances Griffin, Michael/Margaret Griffin, Edward/Linda Griffin, and Katherine G. Von St. Paul, have submitted an application to enroll five (5) parcels of land totaling 175.49 acres as qualifying farmland for the Voluntary Agricultural District (VAD) program in the High Rock/Efland Agricultural District. The farm operation includes hay crops, and managed woodland. The W & F Family Farm and adjourning acres owned by the Griffin family has been evaluated against each of the VAD certification requirement standards and meets or exceeds all of the measures above.

3) Owners Claude Hughes and Linda Sakiewicz have submitted an application to enroll four (4) parcels of land totaling 105.9 acres as qualifying farmland for the Voluntary Agricultural District (VAD) program in the Cane Creek/Buckhorn District. The farm operation includes vegetables, herbs, fruit crops and managed woodland. The Hughes /Sakiewicz Farm have been evaluated against each of the VAD certification requirement standards and meets or exceeds all of the measures above.

4) Owners of Spring Crest Farm, Kim and Chad Woods, have submitted an application to update ownership of existing acres in the VAD program and enroll two (2) parcels of land totaling of 15.06 acres as qualifying farmland for the Voluntary Agricultural District (VAD) program located in the Caldwell Agricultural District. The farm includes pasture, hay crops and managed woodland. The additional acres are adjacent to the existing VAD farm, and will increase the total farm acres to 98.62 acres. The farm has been evaluated against each

of the VAD certification requirement standards and meets or exceeds all of the measures above.

5) Owners of the Parker Farm, Carlton, Barbara, Shane, Carley, and Sarah Parker, have submitted an application to enroll five (5) parcel of land totaling 298.24 acres as qualifying farmland for the Voluntary Agricultural District (VAD) program in the Caldwell Agricultural District. The farm operation includes a beef cattle operation, pastures, hay crops and managed woodland. The Parker Farm has been evaluated against each of the VAD certification requirement standards and meets or exceeds all of the measures above.

6) Owners Susan Gray and Tommy Warren have submitted an application to enroll one (1) parcel of land totaling 53.01 acres as qualifying farmland for the Voluntary Agricultural District (VAD) program in the Caldwell Agricultural District. The farm operation includes a beef cattle operation, pastures, hay crops and managed woodland. The Gray/Warren farm has been evaluated against each of the VAD certification requirement standards and meets or exceeds all of the measures above.

7) Owners of the Milton A. Latta & Sons Dairy Farm Inc., William and Tate Latta, have submitted an application to enroll five (5) parcels of land totaling 622.30 acres as qualifying farmland – 363.59 acres for the Voluntary Agricultural District (VAD) program and 258.71 acres for the Enhanced Voluntary Agricultural District program (EVAD) in the Schley/Eno Agricultural District. The farm operation includes a dairy cattle operation, pastures, hay, grain, corn crops and managed woodland. The Latta Farm has been evaluated against each of the VAD and EVAD certification requirement standards and meets or exceeds all of the measures above.

8) The owner of the Irvin Farm Nature Preserve, the Triangle Land Conservancy, has submitted an application to enroll three (3) parcels of land totaling 261.27 acres as qualifying farmland for the Enhanced Voluntary Agricultural District (EVAD) program in the White Cross Agricultural District. The farm operation includes traditional and Asian fruits and vegetables, wildlife habitat and managed woodland. The Irvin Farm has been evaluated against each of the EVAD certification requirement standards and meets or exceeds all of the measures above.

9) Owners of the Atwater Farm, Donald and Warren Atwater, have submitted an application to enroll four (4) parcels of land totaling 116.25 acres as qualifying farmland for the Voluntary Agricultural District (VAD) program in the White Cross Agricultural District. The farm operation includes a hay crops and managed woodland. The Atwater farm has been evaluated against each of the VAD certification requirement standards and meets or exceeds all of the measures above.

10) Owners of the Durham Farm, Gerry and Milton Durham, have submitted an application to enroll five (5) parcels of land totaling 197.56 acres as qualifying farmland for the Voluntary Agricultural District (VAD) program in the White Cross Agricultural District. The farm operation includes a beef cattle operation, pastures, hay crops and managed woodland. The Durham farm has been evaluated against each of the VAD certification requirement standards and meets or exceeds all of the measures above.

**FINANCIAL IMPACT:** There is no fiscal impact associated with this item. Voluntary Agricultural Districts are non-monetary and non-binding conservation agreements. Enhanced

Voluntary Agriculture Districts are non-monetary and are binding 10-year conservation agreements.

**SOCIAL JUSTICE IMPACT:** The following Orange County Social Justice Goal is applicable to this item:

- **GOAL: ENSURE ECONOMIC SELF-SUFFICIENCY**
  The creation and preservation of infrastructure, policies, programs and funding necessary for residents to provide shelter, food, clothing and medical care for themselves and their dependents.

The Orange County Voluntary Agricultural District Program ordinance conserves, protects and encourages the preservation and improvement of agricultural land within the County boundaries as a critical component of the County's cultural and rural character and its economy by virtue of the production of food, fiber and other products. The purpose of this Ordinance is to reduce the loss of productive and existing farmland by promoting agricultural values and the general welfare of the County, recognize the existence of important farmlands by seeking to minimize risks of nuisance suits that arise from the onset of other land uses, encourage participation in voluntary programs to preserve and protect farmland from non-farm development and increase identity and awareness of the agricultural community, and its role in the economic and cultural quality of life for all County residents.

**RECOMMENDATION(S):** The Manager recommends that the Board certify the ten (10) farm properties noted above totaling 1,325 acres (VAD) and 530 acres (EVAD) (rounded acreage) as denoted in the attached documentation as qualifying farmland; designate the farms as a Voluntary or Enhanced Voluntary Agricultural District farm within the Caldwell, Cane Creek/Buckhorn, High Rock/Efland, New Hope/Hillsborough, Schley/Eno, and White Cross Voluntary Agricultural Districts; and enroll the lands in the Orange County Voluntary Agricultural District (VAD) and the Enhanced Voluntary Agricultural District (EVAD) programs.

With approval of these additional acres, the Orange County Voluntary Agricultural District Program will have enrolled 70 farms, totaling 8,536 acres in the VAD and 1,859 acres in the EVAD, for a total of 10,395 acres (rounded) in the program.

Attachment 1

# Voluntary Agricultural Districts

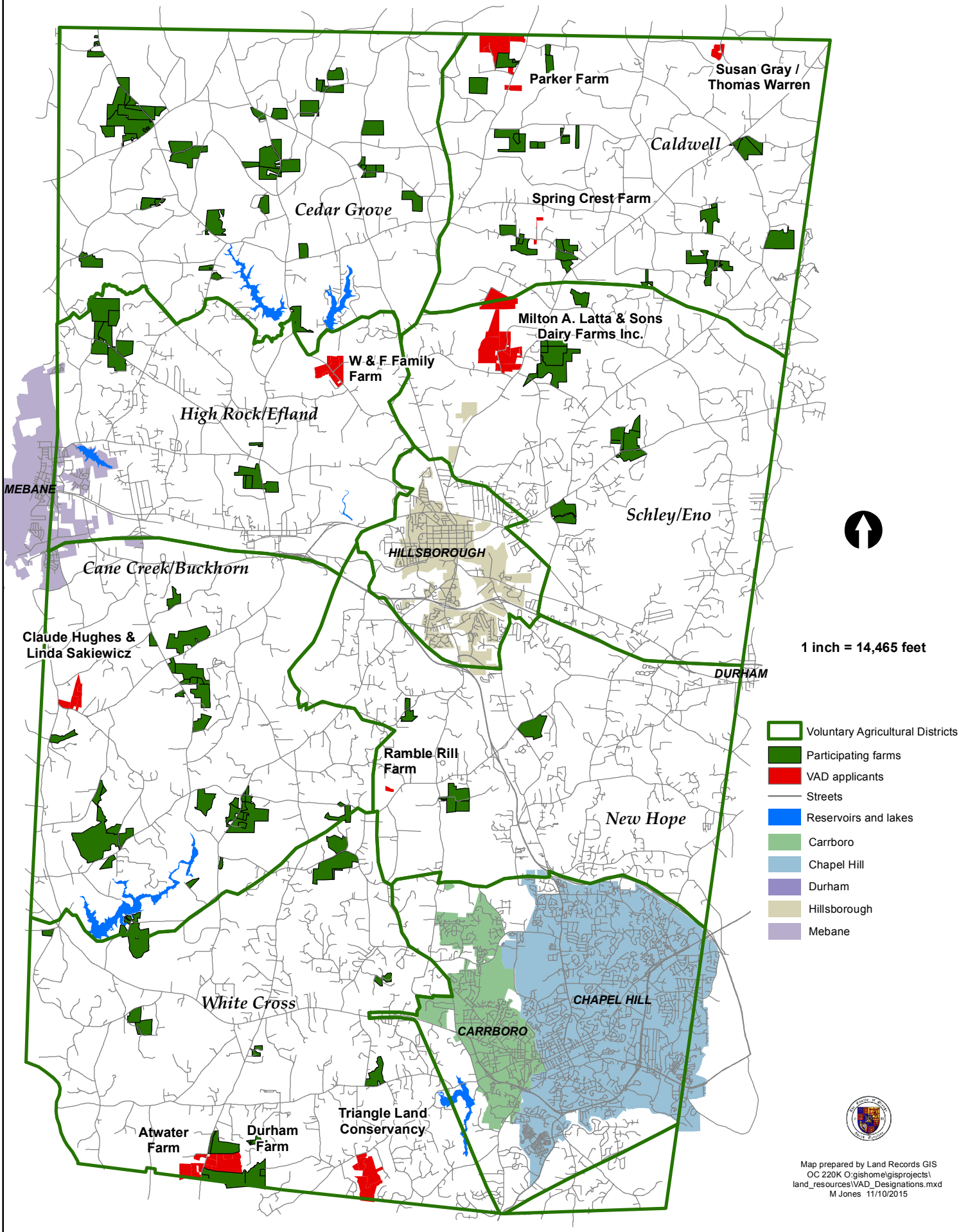

Attachment 2

**Application for Orange County**
**Farmland Preservation Program**
**Voluntary and Enhanced Voluntary Agricultural District Program**

**INSTRUCTIONS:**
Before completing the application, please review the VAD/EVAD brochure provided;
Complete the form as completely as possible; sign and date the form, and return to:

Gail M. Hughes
Orange County Dept. of Environment, Agriculture, Parks and Recreation
Soil and Water Conservation Division
P.O. Box 8181 (306 Revere Road)
Hillsborough, NC 27278

**APPLICANT:**

Name: RambleRill Farm (Jane Saiers and Darin Knapp)

Address: **HOME:** 5407 Spring House Lane, Chapel Hill, NC 27516
**FARM:** 913 Arthur Minnis Road, Hillsborough, NC 27278

Phone Number (Day): 919-618-6067 (Evening): 919-618-6067

E-Mail: Jane@RambleRillFarm.com

**PROPERTY INFORMATION:**

Property Location/Address(s): **913 Arthur Minnis Road, Hillsborough, NC 27278**

Agriculture District /Township: **New Hope**

Parcel Identification Number (PIN): **9861287047** Acres **10.01**

Parcel Identification Number (PIN): _____ Acres _____

Parcel Identification Number (PIN): _____ Acres _____

Parcel Identification Number (PIN): _____ Acres _____

Parcel Identification Number (PIN): _____ Acres _____

Total Number of Acres on all tracts of land: **10.01**

Does this land have a plan on file with the USDA-Natural Resources Conservation Service or the NC Forest Service?

Yes: **X** No:_____ If "No", please complete back of form

****In 2013, we developed an EQIP CAP 138 with Keith Baldwin of the Carolina Farm Stewardship Association and Brent Bogue of NRCS.**

Is the land enrolled in Present Use Value taxation program with Orange County Tax Office?

Yes:_____ No:___**X**_ If "No", please complete back of form

**CONSERVATION AGREEMENT DETAIL of VAD and EVAD:**

**Voluntary Agricultural District (VAD)** conservation agreements are for a period of ten years. The landowner may revoke the agreement through a written request to the Orange County Agricultural Preservation Board. A Conservation Agreement for land within a Voluntary Agricultural District shall be automatically renewed for an additional term of ten years unless either the Agricultural Preservation Board or the landowner(s) gives written notice to the contrary prior to the termination date of the Conservation Agreement. At the end of each ten-year term, the Conservation Agreement shall automatically renew for an additional ten-year term unless notice of termination is given.

**Enhanced Voluntary Agricultural District (EVAD)** conservation agreements are for a period of ten years, but cannot be revoked during the term of the agreement. EVAD enrollment, however, offers landowners additional benefits such as a higher percentage of cost-share funds under the Agricultural Cost Share Program. A Conservation Agreement for an Enhanced Voluntary Agricultural District shall be deemed automatically renewed for an additional term of three years unless either the Agricultural Preservation Board or the landowner(s) gives written notice to the contrary prior to the termination date of the Conservation Agreement. At the end of each three-year term the Conservation Agreement shall automatically renew for an additional three-year term unless notice of termination is given.

**I [We] have read the Conservation Agreement details above and I [we] understand the benefits of the VAD and/or EVAD program.**

SIGNATURE Jane Stairs DATE August 4, 2015

_____I [WE] ARE SEEKING DESIGNATION AS A **VOLUNTARY AGRICULTURAL DISTRICT**

__**X**_I [WE] ARE SEEKING DESIGNATION AS AN **ENHANCED VOLUNTARY AGRICULTURAL DISTRICT**

**OWNER[S] CERTIFICATION:**

I [We], the applicant[s] and landowner(s), hereby certify that, to the best of my [our] knowledge, the foregoing application is complete and accurate.

Signature: Jane Stairs Date: August 4, 2015

Signature: Darin J. Knapp Date: August 4, 2015

Signature: _____ Date: _____

Signature: _____ Date: _____

Signature: _____ Date: _____

Signature: _____ Date: _____

Signature: _____ Date: _____

**Please complete this section for general information about your farm.**

1. How long have you owned and your farm? **5.5** years

2. How long have you lived on your farm? **We do not live on our farm. We live 2 miles down the road from our farm at 5407 Spring House Lane, Chapel Hill, NC. We have been farming at our farm for 5.5 years.**

3. How many acres on your farm are under cultivation? **1.5 acres** (estimate)

4. What are the major crops you plant each year?
**Muscadine grapes; shiitake mushrooms; blueberries; strawberries; asparagus; annual vegetables including kohlrabi, radishes, onions, turnips, tomatoes, squash, lettuce, swiss chard, kale, mustard, arugula, beets, carrots, Irish potatoes, sweet potatoes, peanuts, eggplant, okra, peppers, beans, peas, cucumbers, edamame, Asian greens.**

6. How many acres on your farm are used for pasture? __0___ acres (estimate)

7. How many acres on your farm are used for woodland/forestry? **7 acres wooded of which 0.1 acres is used for agricultural purposes (estimate). Seven of our 10 acres are woodland. We only use a small fraction of the woodland for agricultural purposes--- i.e., as space to house our shiitake mushroom cultivation operation.**

8. If your family has owned and operated the farm over 100 years, would you be interested in the Century Farm Program? This is an Orange County and NC Dept. of Agriculture recognition program for family farms that have continued to farm for over 100 years. _____ yes ____no **NOT APPLICABLE**

## Volunteer opportunity:

The Orange County Agricultural Preservation Board (APB) is made up of volunteers, who are interested in the counties' agricultural concerns: protection, preservation, economic sustainability, and the future of farming and agricultural in Orange County.
If you are interested in being a potential member of the Agricultural Preservation Board, please indicate and signing below.

_XXX_ Yes, please inform me when a position on the APB is available.
___ No, thank you- not at this time.

Signature: Jane Laiers

**For questions or more information, please contact:**

**Gail M. Hughes**
Orange County Department of Environment, Agriculture, Parks and Recreation
Soil and Water Conservation Division
P.O. Box 8181 (306 Revere Road)
Hillsborough, NC 27278 (919) 245-2753 (Office) (919) 644-3351 (fax)
ghughes@orangecountync.gov

## For more detailed information about the Voluntary Farmland Program:

Please refer to the Orange County Voluntary Farmland Preservation Program Ordinance, which can be found in Chapter 48 of the Orange County Code of Ordinances, at the following link: http://library.municode.com/index.aspx?clientId=14983 or staff can provide a copy for you.

**Ramble Rill Farm**
**Jane Saier & Darin Knapp**
**Enhanced Voluntary Agricultural District**
**PIN 9861287047 (10.01 acres)**
**Aerial Map**

Ramble Rill Farm

Parcel boundary

2013 Aerial images

1 inch = 191 feet

Dept. of Environment, Agriculture, Parks and Recreation Map prepared by Land Records/GIS Div. 10/21/2015 OC 220K <O:gishome\gisproj\land_resource\VAD_RambleRillFarm.mxd

**Application for Orange County**
**Farmland Preservation Program**
**Voluntary and Enhanced Voluntary Agricultural District Program**

**INSTRUCTIONS:**
Before completing the application, please review the VAD/EVAD brochure provided;
Complete the form as completely as possible; sign and date the form, and return to:

Gail M. Hughes
Orange County Dept. of Environment, Agriculture, Parks and Recreation
Soil and Water Conservation Division
P.O. Box 8181 (306 Revere Road)
Hillsborough, NC 27278

**APPLICANT:**

Name: W & F Family Farm LLC; owners - Frances H Griffin; Michael/Margaret Griffin; Edward/Linda Griffin; Katherine G. Von St. Paul

Address: 3600 Highland Farm Rd.

City: Hillborough State: NC Zip Code: 27278

Phone Number (Day): 919-732-4815 (Mike) (Evening): _____

E-Mail: griffingenser@centurylink.net

**PROPERTY INFORMATION:**

Property Location/Address(s): 3600, 3510, & 3737 Highland Farm Rd.; 1135 Kenion Rd.

Agriculture District /Township: High Rock/ Efland Ag. District

Parcel Identification Number (PIN): 9856474005 Acres 131.88 (Family/LLC)

Parcel Identification Number (PIN): 9856568873 Acres 10.19 (Frances)

Parcel Identification Number (PIN): 9856663309 Acres 10.86 (Mike)

Parcel Identification Number (PIN): 9856585389 Acres 11.59 (Katherine)

Parcel Identification Number (PIN): 9856780531 Acres 10.97 (Edward)

Parcel Identification Number (PIN): _____ Acres _____

Total Number of Acres on all tracts of land: 175.49

Does this land have a plan on file with the USDA-Natural Resources Conservation Service or the NC Forest Service?

Yes: xx No: _____ If "No", please complete back of form

Is the land enrolled in Present Use Value taxation program with Orange County Tax Office?

Yes: xx No: _____ (LLC Parcel) -other parcels have hay or pasture included in the parcel. No in PUV

**CONSERVATION AGREEMENT DETAIL of VAD and EVAD:**

**Voluntary Agricultural District (VAD)** conservation agreements are for a period of ten years. The landowner may revoke the agreement through a written request to the Orange County Agricultural Preservation Board. A Conservation Agreement for land within a Voluntary Agricultural District shall be automatically renewed for an additional term of ten years unless either the Agricultural Preservation Board or the landowner(s) gives written notice to the contrary prior to the termination date of the Conservation Agreement. At the end of each ten-year term, the Conservation Agreement shall automatically renew for an additional ten-year term unless notice of termination is given.

**Enhanced Voluntary Agricultural District (EVAD)** conservation agreements are for a period of ten years, but cannot be revoked during the term of the agreement. EVAD enrollment, however, offers landowners additional benefits such as a higher percentage of cost-share funds under the Agricultural Cost Share Program. A Conservation Agreement for an Enhanced Voluntary Agricultural District shall be deemed automatically renewed for an additional term of three years unless either the Agricultural Preservation Board or the landowner(s) gives written notice to the contrary prior to the termination date of the Conservation Agreement. At the end of each three-year term the Conservation Agreement shall automatically renew for an additional three-year term unless notice of termination is given.

**I [We] have read the Conservation Agreement details above and I [we] understand the benefits of the VAD and/or EVAD program.**

SIGNATURE Frances H. Griffin DATE 8/24/2015

X I [WE] ARE SEEKING DESIGNATION AS A **VOLUNTARY AGRICULTURAL DISTRICT**

_____ I [WE] ARE SEEKING DESIGNATION AS AN **ENHANCED VOLUNTARY AGRICULTURAL DISTRICT**

**OWNER[S] CERTIFICATION:**

I [We], the applicant[s] and landowner(s), hereby certify that, to the best of my [our] knowledge, the foregoing application is complete and accurate.

**For LLC:** Signature: Frances H. Griffin Date: 8/24/2015

**Frances:** Signature: Frances H. Griffin Date: 8/24/2015

**Mike:** Signature: Michael R. Griffin Date: 9/8/15

**Margaret:** Signature: Margaret E. Griffin Date: 9/8/15

**Edward:** Signature: Edward H. Griffin Date: 8/14/15

**Linda:** Signature: Linda Diane Smith Griffin Date: 8/14/15

**Katherine:** Signature: Katherine Griffin von St Paul Date: 8/28/15

**Please complete this section for general information about your farm.**

1. How long have you owned and your farm? 123 years

2. How long have you lived on your farm? most of 90 years

3. How many acres on your farm are under cultivation? 54.16 acres (estimate)

4. What are the major crops you plant each year? hay and soybeans

6. How many acres on your farm are used for pasture? 2.5 acres (estimate)

7. How many acres on your farm are used for woodland/forestry? 51.2 acres (estimate)

8. If your family has owned and operated the farm over 100 years, would you be interested in the Century Farm Program? This is an Orange County and NC Dept. of Agriculture recognition program for family farms that have continued to farm for over 100 years. ✓ yes ____no already in program. May need name change.

## Volunteer opportunity:

The Orange County Agricultural Preservation Board (APB) is made up of volunteers, who are interested in the counties' agricultural concerns: protection, preservation, economic sustainability, and the future of farming and agricultural in Orange County.
If you are interested in being a potential member of the Agricultural Preservation Board, please indicate and signing below.

___ Yes, please inform me when a position on the APB is available.
___ No, thank you- not at this time.

Signature: _____

**For questions or more information, please contact:**

**Gail M. Hughes**
Orange County Department of Environment, Agriculture, Parks and Recreation
Soil and Water Conservation Division
P.O. Box 8181 (306 Revere Road)
Hillsborough, NC 27278 (919) 245-2753 (Office) (919) 644-3351 (fax)
ghughes@orangecountync.gov

## For more detailed information about the Voluntary Farmland Program:

Please refer to the Orange County Voluntary Farmland Preservation Program Ordinance, which can be found in Chapter 48 of the Orange County Code of Ordinances, at the following link: http://library.municode.com/index.aspx?clientId=14983 or staff can provide a copy for you.

Updated July 2015

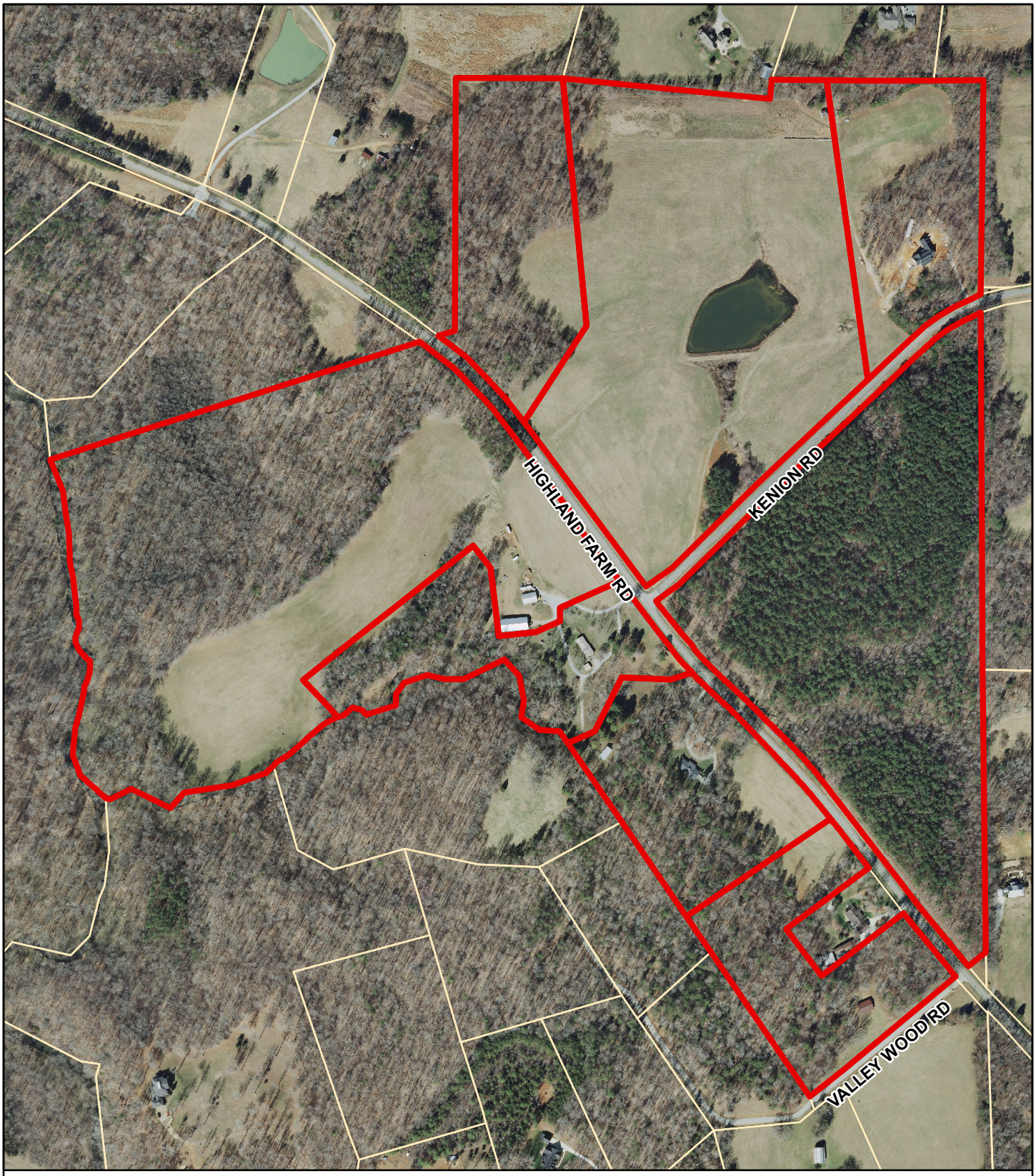


**W & F Family Farm LLC**
**Voluntary Agricultural District**
**PIN 9856474005 (131.88 acres)**
**9856568873 (10.19)**
**9856663309 (10.86 acres)**
**9856780531 (10.97 acres)**
**9856585389 11.59 acres)**
**Aerial Map**

W. & F. Family Farm LLC (175.49 acres)

Parcel boundary

2013 Aerial images

1 inch = 502 feet

Dept. of Environment, Agriculture, Parks and Recreation Map prepared by Land Records/GIS Div. 10/22/2015 OC 220K <O:gishome\gisproj\land_resource\VAD_RambleRillFarm.mxd

**Application for Orange County**
**Farmland Preservation Program**
**Voluntary and Enhanced Voluntary Agricultural District Program**

**INSTRUCTIONS:**
Before completing the application, please review the VAD/EVAD brochure provided;
Complete the form as completely as possible; sign and date the form, and return to:

Gail M. Hughes
Orange County Dept. of Environment, Agriculture, Parks and Recreation
Soil and Water Conservation Division
P.O. Box 8181 (306 Revere Road)
Hillsborough, NC 27278

**APPLICANT:**

Name: Claude L. Hughes & Linda A. Sekiewicz

Address: 3500 Oak Grove Church Road

City: Mebane State: NC Zip Code: 27302

Phone Number (Day): 919 563-8993 (Evening): 919563-8993

E-Mail: chughes.farm@gmail.com

**PROPERTY INFORMATION:**

Property Location/Address(s): 3500 Oak Grove Church Road, Mebane, NC 27302

Agriculture District /Township: Cane Creek/Buckhorn

Parcel Identification Number (PIN): 9822691373 Acres 45.98

Parcel Identification Number (PIN): 9822585297 Acres 25.96

Parcel Identification Number (PIN): 9822693951 Acres 10.01

Parcel Identification Number (PIN): 9822474931 Acres 23.95

Parcel Identification Number (PIN): _____ Acres _____

Parcel Identification Number (PIN): _____ Acres _____

Total Number of Acres on all tracts of land: 105.9

Does this land have a plan on file with the USDA-Natural Resources Conservation Service or the NC Forest Service?

Yes: ✓ USDA-NRCS No: ✗ If "No", please complete back of form

Is the land enrolled in Present Use Value taxation program with Orange County Tax Office?

Yes: X No: _____ If "No", please complete back of form

**CONSERVATION AGREEMENT DETAIL of VAD and EVAD:**

**Voluntary Agricultural District (VAD)** conservation agreements are for a period of ten years. The landowner may revoke the agreement through a written request to the Orange County Agricultural Preservation Board. A Conservation Agreement for land within a Voluntary Agricultural District shall be automatically renewed for an additional term of ten years unless either the Agricultural Preservation Board or the landowner(s) gives written notice to the contrary prior to the termination date of the Conservation Agreement. At the end of each ten-year term, the Conservation Agreement shall automatically renew for an additional ten-year term unless notice of termination is given.

**Enhanced Voluntary Agricultural District (EVAD)** conservation agreements are for a period of ten years, but cannot be revoked during the term of the agreement. EVAD enrollment, however, offers landowners additional benefits such as a higher percentage of cost-share funds under the Agricultural Cost Share Program. A Conservation Agreement for an Enhanced Voluntary Agricultural District shall be deemed automatically renewed for an additional term of three years unless either the Agricultural Preservation Board or the landowner(s) gives written notice to the contrary prior to the termination date of the Conservation Agreement. At the end of each three-year term the Conservation Agreement shall automatically renew for an additional three-year term unless notice of termination is given.

**I [We] have read the Conservation Agreement details above and I [we] understand the benefits of the VAD and/or EVAD program.**

SIGNATURE Claude L. Hughes L Sauiewicz DATE 05 AUG 2015

X I [WE] ARE SEEKING DESIGNATION AS A **VOLUNTARY AGRICULTURAL DISTRICT**

_____ I [WE] ARE SEEKING DESIGNATION AS AN **ENHANCED VOLUNTARY AGRICULTURAL DISTRICT**

**OWNER[S] CERTIFICATION:**

I [We], the applicant[s] and landowner(s), hereby certify that, to the best of my [our] knowledge, the foregoing application is complete and accurate.

Signature: Claude L. Hughes Jr. Date: 05 AUG 2015

Signature: L Sauiewicz Date: 8-12-2015

Signature: _____ Date: _____

Signature: _____ Date: _____

Signature: _____ Date: _____

Signature: _____ Date: _____

Signature: _____ Date: _____

**Please complete this section for general information about your farm.**

1. How long have you owned and your farm? 30 years

2. How long have you lived on your farm? 30 years

3. How many acres on your farm are under cultivation? 1 acres (estimate)

4. What are the major crops you plant each year?
   produce, herbs, berries

6. How many acres on your farm are used for pasture? 30 acres (estimate)

7. How many acres on your farm are used for woodland/forestry? 70 acres (estimate)

8. If your family has owned and operated the farm over 100 years, would you be interested in the Century Farm Program? This is an Orange County and NC Dept. of Agriculture recognition program for family farms that have continued to farm for over 100 years. _____ yes ____no Not applicable

## Volunteer opportunity:

The Orange County Agricultural Preservation Board (APB) is made up of volunteers, who are interested in the counties' agricultural concerns: protection, preservation, economic sustainability, and the future of farming and agricultural in Orange County.
If you are interested in being a potential member of the Agricultural Preservation Board, please indicate and signing below.

___ Yes, please inform me when a position on the APB is available.
X No, thank you- not at this time.

Signature: Gail M. Hughes

**For questions or more information, please contact:**

**Gail M. Hughes**
Orange County Department of Environment, Agriculture, Parks and Recreation
Soil and Water Conservation Division
P.O. Box 8181 (306 Revere Road)
Hillsborough, NC 27278 (919) 245-2753 (Office) (919) 644-3351 (fax)
ghughes@orangecountync.gov

## For more detailed information about the Voluntary Farmland Program:

Please refer to the Orange County Voluntary Farmland Preservation Program Ordinance, which can be found in Chapter 48 of the Orange County Code of Ordinances, at the following link: http://library.municode.com/index.aspx?clientId=14983 or staff can provide a copy for you.

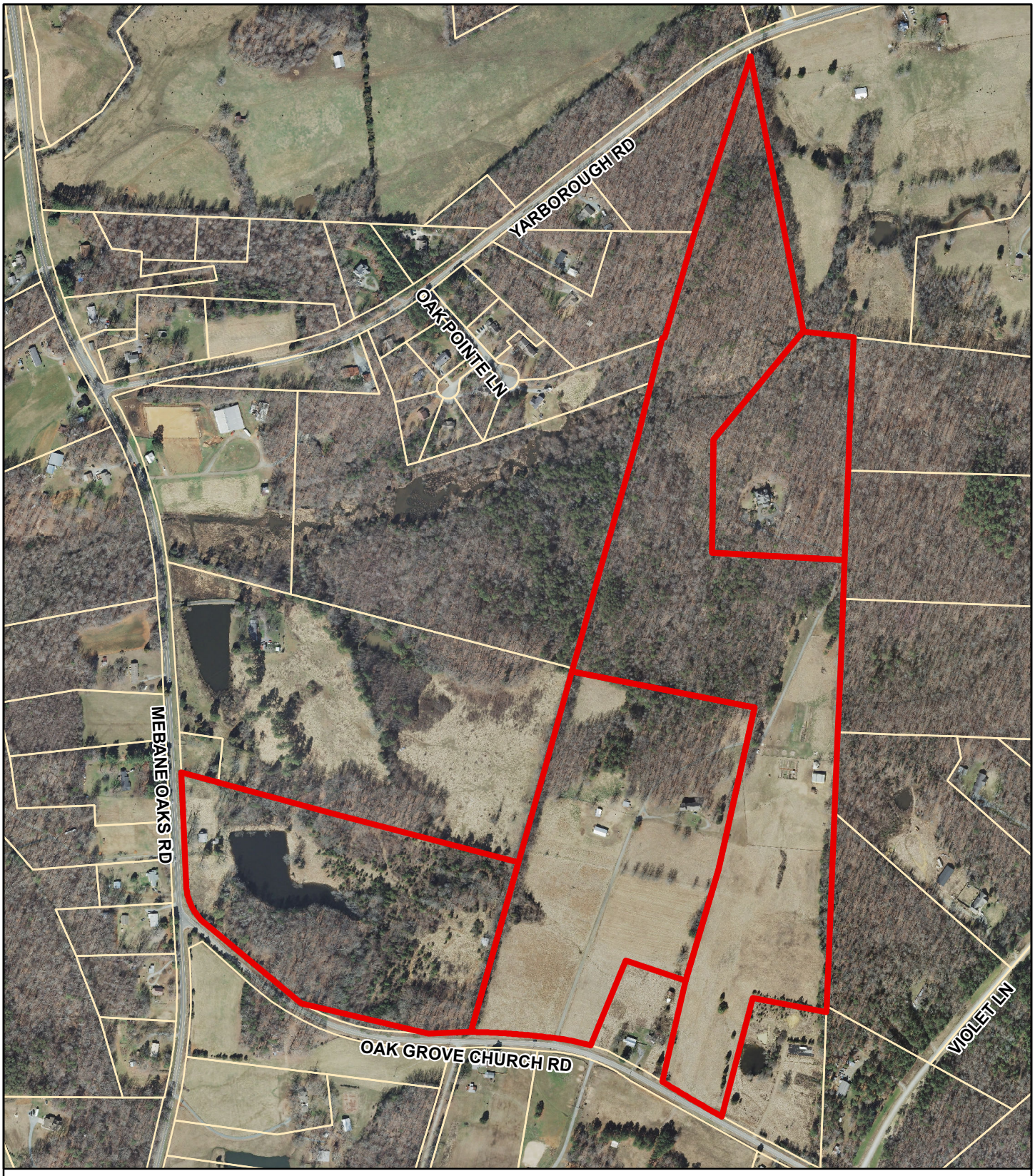


**Claude L. Hughes & Linda A. Sakiewicz**
**Voluntary Agricultural District**
**PIN 9822691373 (45.98 acres)**
**9822585297 (25.96 acres)**
**9822693951 (10.01 acres)**
**9822474931 (23.95 acres)**
**Aerial Map**

Claude L. Hughes & Linda A. Sakiewicz (105.9 acres)

Parcel boundary

2013 Aerial images

1 inch = 573 feet

Dept. of Environment, Agriculture, Parks and Recreation Map prepared by Land Records/GIS Div. 10/22/2015
OC 220K <O:gishome\gisproj\land_resource\VAD_RambleRillFarm.mxd

**Application for Orange County**
**Farmland Preservation Program**
**Voluntary and Enhanced Voluntary Agricultural District Program**

**INSTRUCTIONS:**
Before completing the application, please review the VAD/EVAD brochure provided;
Complete the form as completely as possible; sign and date the form, and return to:

Gail M. Hughes
Orange County Dept. of Environment, Agriculture, Parks and Recreation
Soil and Water Conservation Division
P.O. Box 8181 (306 Revere Road)
Hillsborough, NC 27278

**APPLICANT:**

Name: Spring Crest Farm, LLC Chad & Kimberly Woods
Address: 2915 Pearson Rd.
City: Hurdle Mills State: NC Zip Code: 27541
Phone Number (Day): 336-599-1195 (Evening): 919-624-8035 (c)
E-Mail: Kim_woods@ncsu.edu

**PROPERTY INFORMATION:**

Property Location/Address(s): Pearson Rd. Hurdle Mills
Agriculture District /Township: Caldwell

Revised Parcel Identification Number (PIN): 9878814496 Acres 69.90
* parcels added * Parcel Identification Number (PIN): 9888053006 Acres 10.32 *
* Parcel Identification Number (PIN): 9878928215 Acres 4.74 *
Parcel Identification Number (PIN): 9878821825 Acres 13.66
Parcel Identification Number (PIN): _____ Acres _____
Parcel Identification Number (PIN): _____ Acres _____

Total Number of Acres on all tracts of land: 98.62 new Acres in program = 15.06

Does this land have a plan on file with the USDA-Natural Resources Conservation Service or the NC Forest Service?

Yes: ✓ No: _____ If "No", please complete back of form

Is the land enrolled in Present Use Value taxation program with Orange County Tax Office?

Yes: ✓ No: _____ If "No", please complete back of form
some of the tracts are

**CONSERVATION AGREEMENT DETAIL of VAD and EVAD:**

**Voluntary Agricultural District (VAD)** conservation agreements are for a period of ten years. The landowner may revoke the agreement through a written request to the Orange County Agricultural Preservation Board. A Conservation Agreement for land within a Voluntary Agricultural District shall be automatically renewed for an additional term of ten years unless either the Agricultural Preservation Board or the landowner(s) gives written notice to the contrary prior to the termination date of the Conservation Agreement. At the end of each ten-year term, the Conservation Agreement shall automatically renew for an additional ten-year term unless notice of termination is given.

**Enhanced Voluntary Agricultural District (EVAD)** conservation agreements are for a period of ten years, but cannot be revoked during the term of the agreement. EVAD enrollment, however, offers landowners additional benefits such as a higher percentage of cost-share funds under the Agricultural Cost Share Program. A Conservation Agreement for an Enhanced Voluntary Agricultural District shall be deemed automatically renewed for an additional term of three years unless either the Agricultural Preservation Board or the landowner(s) gives written notice to the contrary prior to the termination date of the Conservation Agreement. At the end of each three-year term the Conservation Agreement shall automatically renew for an additional three-year term unless notice of termination is given.

**I [We] have read the Conservation Agreement details above and I [we] understand the benefits of the VAD and/or EVAD program.**

SIGNATURE Charles E Woods DATE 9-23-15

X I [WE] ARE SEEKING DESIGNATION AS A **VOLUNTARY AGRICULTURAL DISTRICT**

_____ I [WE] ARE SEEKING DESIGNATION AS AN **ENHANCED VOLUNTARY AGRICULTURAL DISTRICT**

**OWNER[S] CERTIFICATION:**

I [We], the applicant[s] and landowner(s), hereby certify that, to the best of my [our] knowledge, the foregoing application is complete and accurate.

Signature: Charles E Woods Date: 9-23-15

Signature: Kimberly D. Woods Date: 9-23-15

Signature: _____ Date: _____

Signature: _____ Date: _____

Signature: _____ Date: _____

Signature: _____ Date: _____

Signature: _____ Date: _____

**Please complete this section for general information about your farm.**

1. How long have you owned and your farm? 7 years
2. How long have you lived on your farm? 7 years
3. How many acres on your farm are under cultivation? 40 acres (estimate)
4. What are the major crops you plant each year?
   hay, cattle

6. How many acres on your farm are used for pasture? 15 acres (estimate)
7. How many acres on your farm are used for woodland/forestry? 30 acres (estimate)
8. If your family has owned and operated the farm over 100 years, would you be interested in the Century Farm Program? This is an Orange County and NC Dept. of Agriculture recognition program for family farms that have continued to farm for over 100 years. ✓ yes ___ no already enrolled in this program

## Volunteer opportunity:

The Orange County Agricultural Preservation Board (APB) is made up of volunteers, who are interested in the counties' agricultural concerns: protection, preservation, economic sustainability, and the future of farming and agricultural in Orange County.
If you are interested in being a potential member of the Agricultural Preservation Board, please indicate and signing below.

✓ Yes, please inform me when a position on the APB is available. Chad might serve on board.
___ No, thank you- not at this time.

Signature: Chad E. Wood

**For questions or more information, please contact:**

**Gail M. Hughes**
Orange County Department of Environment, Agriculture, Parks and Recreation
Soil and Water Conservation Division
P.O. Box 8181 (306 Revere Road)
Hillsborough, NC 27278 (919) 245-2753 (Office) (919) 644-3351 (fax)
ghughes@orangecountync.gov

## For more detailed information about the Voluntary Farmland Program:

Please refer to the Orange County Voluntary Farmland Preservation Program Ordinance, which can be found in Chapter 48 of the Orange County Code of Ordinances, at the following link: http://library.municode.com/index.aspx?clientId=14983 or staff can provide a copy for you.

**Chad and Kim Woods**
**Spring Crest Farm LLC**
**Voluntary Agricultural District**
**PIN 9888053006 (10.32 acres)**
**PIN 9878928215 (4.74 acres)**
**Aerial Map**

Spring Crest Farm (15.06 acres)

Parcel boundary

2013 Aerial images

1 inch = 405 feet

Dept. of Environment, Agriculture, Parks and Recreation Map prepared by Land Records/GIS Div. 11/11/2015 OC 220K <O:gishome\gisproj\land_resource\VAD_RambleRillFarm.mxd

**Application for Orange County**
**Farmland Preservation Program**
**Voluntary and Enhanced Voluntary Agricultural District Program**

**INSTRUCTIONS:**
Before completing the application, please review the VAD/EVAD brochure provided;
Complete the form as completely as possible; sign and date the form, and return to:

Gail M. Hughes
Orange County Dept. of Environment, Agriculture, Parks and Recreation
Soil and Water Conservation Division
P.O. Box 8181 (306 Revere Road)
Hillsborough, NC 27278

**APPLICANT:**

Name: Carlton Parker, Barbara Parker, Shane Parker, Carley and Sarah Parker

Address: 720 Parker Farm Lane

City: Hurdle Mills State: NC Zip Code: 27541

Phone Number (Day): 919-698-1147 (Carlton) (Evening): (919) 732-3322

E-Mail: _____

**PROPERTY INFORMATION:**

Property Location/Address(s): 720 Parker Farm Lane, & around Walnut Grove Church Rd.

Agriculture District /Township: Caldwell District

Parcel Identification Number (PIN): 9970520554 Acres 207.37 Carlton + Barbara

Parcel Identification Number (PIN): 9970765273 Acres 38.78 Carlton/Shane

Parcel Identification Number (PIN): 9970702279 Acres 28.5 Carlton

Parcel Identification Number (PIN): 9970629320 Acres 12.59 Carlton

Parcel Identification Number (PIN): 9970442849 Acres 11.0 Carley/Sarah

Parcel Identification Number (PIN): _____ Acres _____

Total Number of Acres on all tracts of land: 298.24

Does this land have a plan on file with the USDA-Natural Resources Conservation Service or the NC Forest Service?

Yes: XX No: _____ If "No", please complete back of form

Is the land enrolled in Present Use Value taxation program with Orange County Tax Office?

Yes: XX No: _____ If "No", please complete back of form

**CONSERVATION AGREEMENT DETAIL of VAD and EVAD:**

**Voluntary Agricultural District (VAD)** conservation agreements are for a period of ten years. The landowner may revoke the agreement through a written request to the Orange County Agricultural Preservation Board. A Conservation Agreement for land within a Voluntary Agricultural District shall be automatically renewed for an additional term of ten years unless either the Agricultural Preservation Board or the landowner(s) gives written notice to the contrary prior to the termination date of the Conservation Agreement. At the end of each ten-year term, the Conservation Agreement shall automatically renew for an additional ten-year term unless notice of termination is given.

**Enhanced Voluntary Agricultural District (EVAD)** conservation agreements are for a period of ten years, but cannot be revoked during the term of the agreement. EVAD enrollment, however, offers landowners additional benefits such as a higher percentage of cost-share funds under the Agricultural Cost Share Program. A Conservation Agreement for an Enhanced Voluntary Agricultural District shall be deemed automatically renewed for an additional term of three years unless either the Agricultural Preservation Board or the landowner(s) gives written notice to the contrary prior to the termination date of the Conservation Agreement. At the end of each three-year term the Conservation Agreement shall automatically renew for an additional three-year term unless notice of termination is given.

**I [We] have read the Conservation Agreement details above and I [we] understand the benefits of the VAD and/or EVAD program.**

SIGNATURE Carlton R. Parker DATE 11-5-15

✓ I [WE] ARE SEEKING DESIGNATION AS A **VOLUNTARY AGRICULTURAL DISTRICT**

_____ I [WE] ARE SEEKING DESIGNATION AS AN **ENHANCED VOLUNTARY AGRICULTURAL DISTRICT**

**OWNER[S] CERTIFICATION:**

I [We], the applicant[s] and landowner(s), hereby certify that, to the best of my [our] knowledge, the foregoing application is complete and accurate.

Signature: _____ Date: 11-9-2015

Signature: Barbara P. Parker Date: 11-9-2015

Signature: _____ Date: 11-9-2015

Signature: _____ Date: 11-9-2015

Signature: _____ Date: _____

Signature: _____ Date: _____

Signature: _____ Date: _____

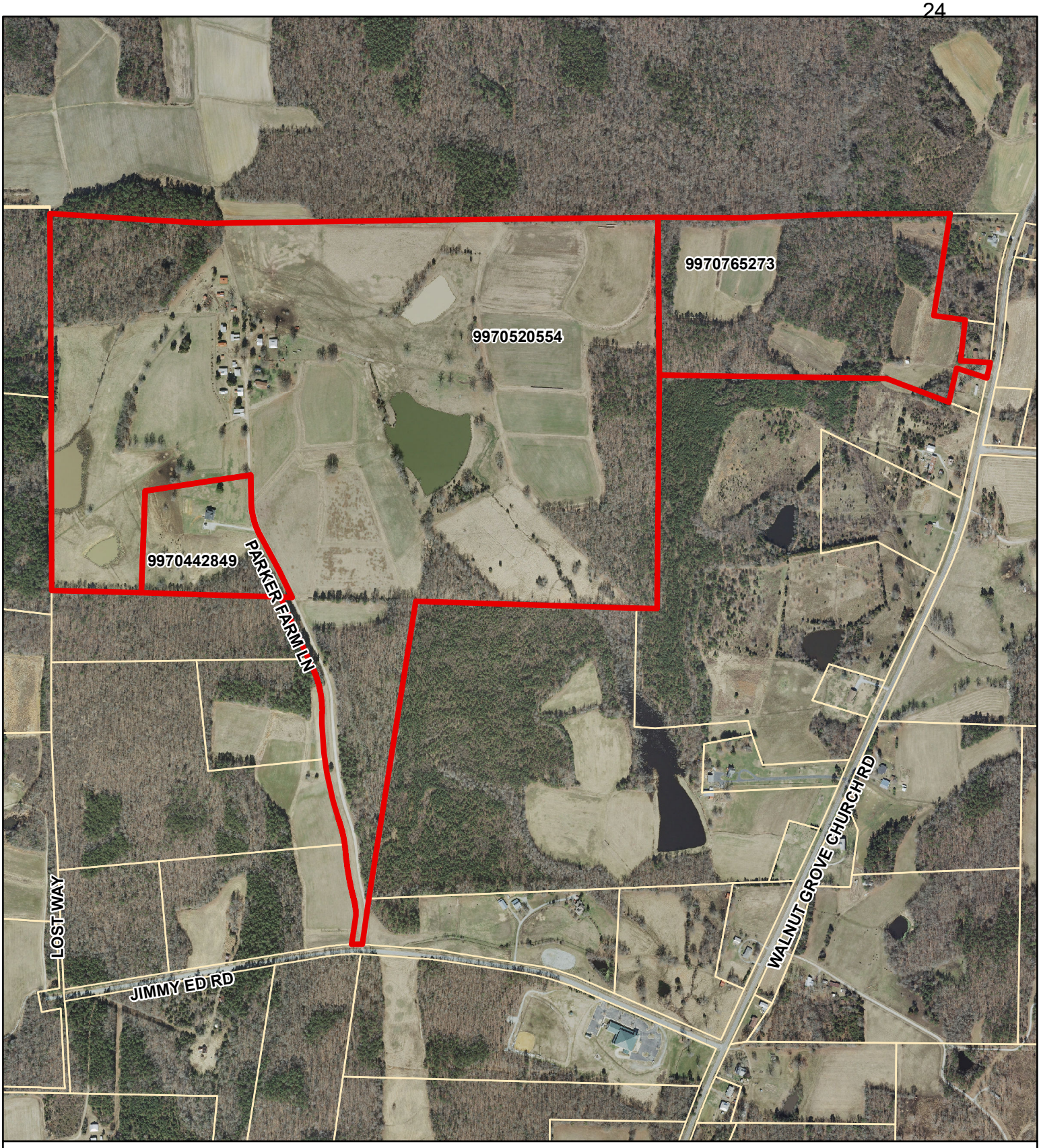


**Parker Farm**
**Voluntary Agricultural District**
**PIN 9970442849 (11 acres)**
**PIN 9970520554 (207.37 acres)**
**PIN 9970765273 (38.78 acres)**
**Aerial Map**

Parker Farm (298.24 acres)

Parcel boundary

2013 Aerial images

1 inch = 764 feet

Dept. of Environment, Agriculture, Parks and Recreation Map prepared by Land Records/GIS Div. 11/11/2015 OC 220K <O:gishome\gisproj\land_resource\VAD_RambleRillFarm.mxd

**Parker Farm**
**Voluntary Agricultural District**
**PIN 9970702279 (28.5 acres)**
**Aerial Map**

Parker Farm (298.24 acres)

Parcel boundary

2013 Aerial images

1 inch = 281 feet

Dept. of Environment, Agriculture, Parks and Recreation Map prepared by Land Records/GIS Div. 11/11/2015 OC 220K <O:gishome\gisproj\land_resource\VAD_RambleRillFarm.mxd

**Parker Farm**
**Voluntary Agricultural District**
**PIN 9970629320 (12.59 acres)**
**Aerial Map**

Parker Farm (298.24 acres)

Parcel boundary

2013 Aerial images

1 inch = 167 feet

Dept. of Environment, Agriculture, Parks and Recreation Map prepared by Land Records/GIS Div. 11/11/2015 OC 220K <O:gishome\gisproj\land_resource\VAD_RambleRillFarm.mxd

**Application for Orange County**
**Farmland Preservation Program**
**Voluntary and Enhanced Voluntary Agricultural District Program**

**INSTRUCTIONS:**
Before completing the application, please review the VAD/EVAD brochure provided;
Complete the form as completely as possible; sign and date the form, and return to:

Gail M. Hughes
Orange County Dept. of Environment, Agriculture, Parks and Recreation
Soil and Water Conservation Division
P.O. Box 8181 (306 Revere Road)
Hillsborough, NC 27278

**APPLICANT:**

Name: Susan Lee Gray

Address: 9914 Sawyer Road

City: Timberlake State: NC Zip Code: 27583

Phone Number (Day): 919-971-0118 cell # (Evening): 919-732-6212

E-Mail: slgray61@gmail.com

**PROPERTY INFORMATION:**

Property Location/Address(s): 9914 Sawyer Rd, Timberlake NC 27583

Agriculture District /Township: Caldwell

Parcel Identification Number (PIN): 0900047666 Acres 53.01

Parcel Identification Number (PIN): _____ Acres _____

Parcel Identification Number (PIN): _____ Acres _____

Parcel Identification Number (PIN): _____ Acres _____

Parcel Identification Number (PIN): _____ Acres _____

Parcel Identification Number (PIN): _____ Acres _____

Total Number of Acres on all tracts of land: _____

Does this land have a plan on file with the USDA-Natural Resources Conservation Service or the NC Forest Service?

Yes: ✓ No: _____ If "No", please complete back of form

Is the land enrolled in Present Use Value taxation program with Orange County Tax Office?

Yes: ✓ No: _____ If "No", please complete back of form

**CONSERVATION AGREEMENT DETAIL of VAD and EVAD:**

**Voluntary Agricultural District (VAD)** conservation agreements are for a period of ten years. The landowner may revoke the agreement through a written request to the Orange County Agricultural Preservation Board. A Conservation Agreement for land within a Voluntary Agricultural District shall be automatically renewed for an additional term of ten years unless either the Agricultural Preservation Board or the landowner(s) gives written notice to the contrary prior to the termination date of the Conservation Agreement. At the end of each ten-year term, the Conservation Agreement shall automatically renew for an additional ten-year term unless notice of termination is given.

**Enhanced Voluntary Agricultural District (EVAD)** conservation agreements are for a period of ten years, but cannot be revoked during the term of the agreement. EVAD enrollment, however, offers landowners additional benefits such as a higher percentage of cost-share funds under the Agricultural Cost Share Program. A Conservation Agreement for an Enhanced Voluntary Agricultural District shall be deemed automatically renewed for an additional term of three years unless either the Agricultural Preservation Board or the landowner(s) gives written notice to the contrary prior to the termination date of the Conservation Agreement. At the end of each three-year term the Conservation Agreement shall automatically renew for an additional three-year term unless notice of termination is given.

**I [We] have read the Conservation Agreement details above and I [we] understand the benefits of the VAD and/or EVAD program.**

SIGNATURE Susan L. Gray DATE 10-28-15

✓ I [WE] ARE SEEKING DESIGNATION AS A **VOLUNTARY AGRICULTURAL DISTRICT**

_____ I [WE] ARE SEEKING DESIGNATION AS AN **ENHANCED VOLUNTARY AGRICULTURAL DISTRICT**

**OWNER[S] CERTIFICATION:**

I [We], the applicant[s] and landowner(s), hereby certify that, to the best of my [our] knowledge, the foregoing application is complete and accurate.

Signature: Susan L. Gray Date: 10-28-15

Signature: [illegible] Date: 10-28-15

Signature: _____ Date: _____

Signature: _____ Date: _____

Signature: _____ Date: _____

Signature: _____ Date: _____

Signature: _____ Date: _____

**Please complete this section for general information about your farm.**

1. How long have you owned and your farm? 10 years
2. How long have you lived on your farm? 26 years
3. How many acres on your farm are under cultivation? 0 acres (estimate)
4. What are the major crops you plant each year? Hay

6. How many acres on your farm are used for pasture? 8 acres (estimate) - currently
7. How many acres on your farm are used for woodland/forestry? 15 acres (estimate)
8. If your family has owned and operated the farm over 100 years, would you be interested in the Century Farm Program? This is an Orange County and NC Dept. of Agriculture recognition program for family farms that have continued to farm for over 100 years. _____ yes ____no

## Volunteer opportunity:

The Orange County Agricultural Preservation Board (APB) is made up of volunteers, who are interested in the counties' agricultural concerns: protection, preservation, economic sustainability, and the future of farming and agricultural in Orange County.
If you are interested in being a potential member of the Agricultural Preservation Board, please indicate and signing below.

___ Yes, please inform me when a position on the APB is available.
✓ No, thank you- not at this time.

Signature: Susan D. Gray

**For questions or more information, please contact:**

**Gail M. Hughes**
Orange County Department of Environment, Agriculture, Parks and Recreation
Soil and Water Conservation Division
P.O. Box 8181 (306 Revere Road)
Hillsborough, NC 27278 (919) 245-2753 (Office) (919) 644-3351 (fax)
ghughes@orangecountync.gov

## For more detailed information about the Voluntary Farmland Program:

Please refer to the Orange County Voluntary Farmland Preservation Program Ordinance, which can be found in Chapter 48 of the Orange County Code of Ordinances, at the following link: http://library.municode.com/index.aspx?clientId=14983 or staff can provide a copy for you.

Updated July 2015

**Susan L. Gray / Thoomas Warren**
**Voluntary Agricultural District**
**PIN 0900047666 (53.01 acres)**
**Aerial Map**

Susan L. Gray / Thoomas Warren (53.01 acres)

Parcel boundary

2013 Aerial images

1 inch = 249 feet

Dept. of Environment, Agriculture, Parks and Recreation Map prepared by Land Records/GIS Div. 11/11/2015 OC 220K <O:gishome\gisproj\land_resource\VAD_RambleRillFarm.mxd

**Application for Orange County**
**Farmland Preservation Program**
**Voluntary and Enhanced Voluntary Agricultural District Program**

**INSTRUCTIONS:**
Before completing the application, please review the VAD/EVAD brochure provided;
Complete the form as completely as possible; sign and date the form, and return to:

Gail M. Hughes
Orange County Dept. of Environment, Agriculture, Parks and Recreation
Soil and Water Conservation Division
P.O. Box 8181 (306 Revere Road)
Hillsborough, NC 27278

**APPLICANT:**

Name: Milton A Latta & Sons Dairy Farms Inc

Address: 3315 Edmund Latta Rd.

City: Hillsborough State: NC Zip Code: 27278

Phone Number (Day): 919-621-0570 cell no. (Evening): _____

E-Mail: _____

**PROPERTY INFORMATION:**

Property Location/Address(s): surrounding land at 3315 Edmund Latta Rd.,

Agriculture District /Township: Schley /Eno Agriculture District

Parcel Identification Number (PIN): 9876493633 Acres 258.71 (EVAD)

Parcel Identification Number (PIN): 9877601770 Acres 69.82 (VAD)

Parcel Identification Number (PIN): 9876676635 Acres 61.17 (VAD)

Parcel Identification Number (PIN): 9877520417 Acres 74.60 (VAD)

Parcel Identification Number (PIN): 9877552527 Acres 158.0 (VAD)

Parcel Identification Number (PIN): _____ Acres _____ VAD=363.59

Total Number of Acres on all tracts of land: 622.30

Does this land have a plan on file with the USDA-Natural Resources Conservation Service or the NC Forest Service?

Yes: XX No: _____ If "No", please complete back of form

Is the land enrolled in Present Use Value taxation program with Orange County Tax Office?

Yes: XX No: _____ If "No", please complete back of form

**CONSERVATION AGREEMENT DETAIL of VAD and EVAD:**

**Voluntary Agricultural District (VAD)** conservation agreements are for a period of ten years. The landowner may revoke the agreement through a written request to the Orange County Agricultural Preservation Board. A Conservation Agreement for land within a Voluntary Agricultural District shall be automatically renewed for an additional term of ten years unless either the Agricultural Preservation Board or the landowner(s) gives written notice to the contrary prior to the termination date of the Conservation Agreement. At the end of each ten-year term, the Conservation Agreement shall automatically renew for an additional ten-year term unless notice of termination is given.

**Enhanced Voluntary Agricultural District (EVAD)** conservation agreements are for a period of ten years, but cannot be revoked during the term of the agreement. EVAD enrollment, however, offers landowners additional benefits such as a higher percentage of cost-share funds under the Agricultural Cost Share Program. A Conservation Agreement for an Enhanced Voluntary Agricultural District shall be deemed automatically renewed for an additional term of three years unless either the Agricultural Preservation Board or the landowner(s) gives written notice to the contrary prior to the termination date of the Conservation Agreement. At the end of each three-year term the Conservation Agreement shall automatically renew for an additional three-year term unless notice of termination is given.

**I [We] have read the Conservation Agreement details above and I [we] understand the benefits of the VAD and/or EVAD program.**

SIGNATURE William P Tate DATE 11-5-15

✓ I [WE] ARE SEEKING DESIGNATION AS A **VOLUNTARY AGRICULTURAL DISTRICT** (36.36)

✓ I [WE] ARE SEEKING DESIGNATION AS AN **ENHANCED VOLUNTARY AGRICULTURAL DISTRICT** (258.71)

**OWNER[S] CERTIFICATION:**

I [We], the applicant[s] and landowner(s), hereby certify that, to the best of my [our] knowledge, the foregoing application is complete and accurate.

Signature: Tate Tate Date: 11/5/15

Signature: William P Tate Date: 11-5-15

Signature: _____ Date: _____

Signature: _____ Date: _____

Signature: _____ Date: _____

Signature: _____ Date: _____

Signature: _____ Date: _____

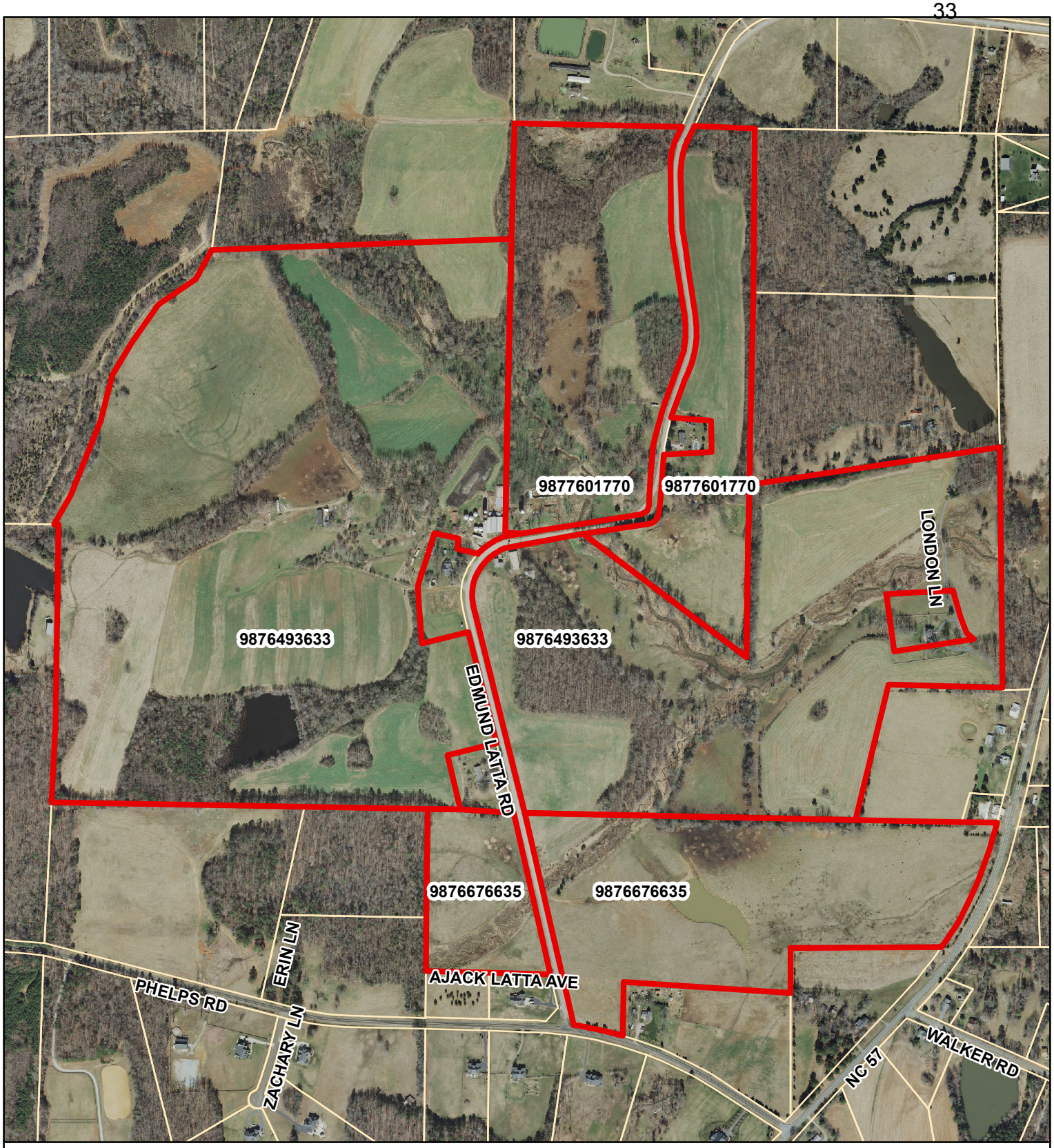


**Milton A. Latta & Sons Dairy Farms Inc.**
**EVAD PIN 9876493633 (258.71 acres)**
**VAD PIN 9877601770 (69.82 acres)**
**VAD PIN 9876676635 (61.17 acres)**
**Aerial Map**

1 inch = 723 feet

Milton A. Latta & Sons Dairy Farms Inc.(622.30 acres)

Parcel boundary

2013 Aerial images

Dept. of Environment, Agriculture, Parks and Recreation Map prepared by Land Records/GIS Div. 11/11/2015
OC 220K <O:gishome\gisproj\land_resource\VAD_RambleRillFarm.mxd

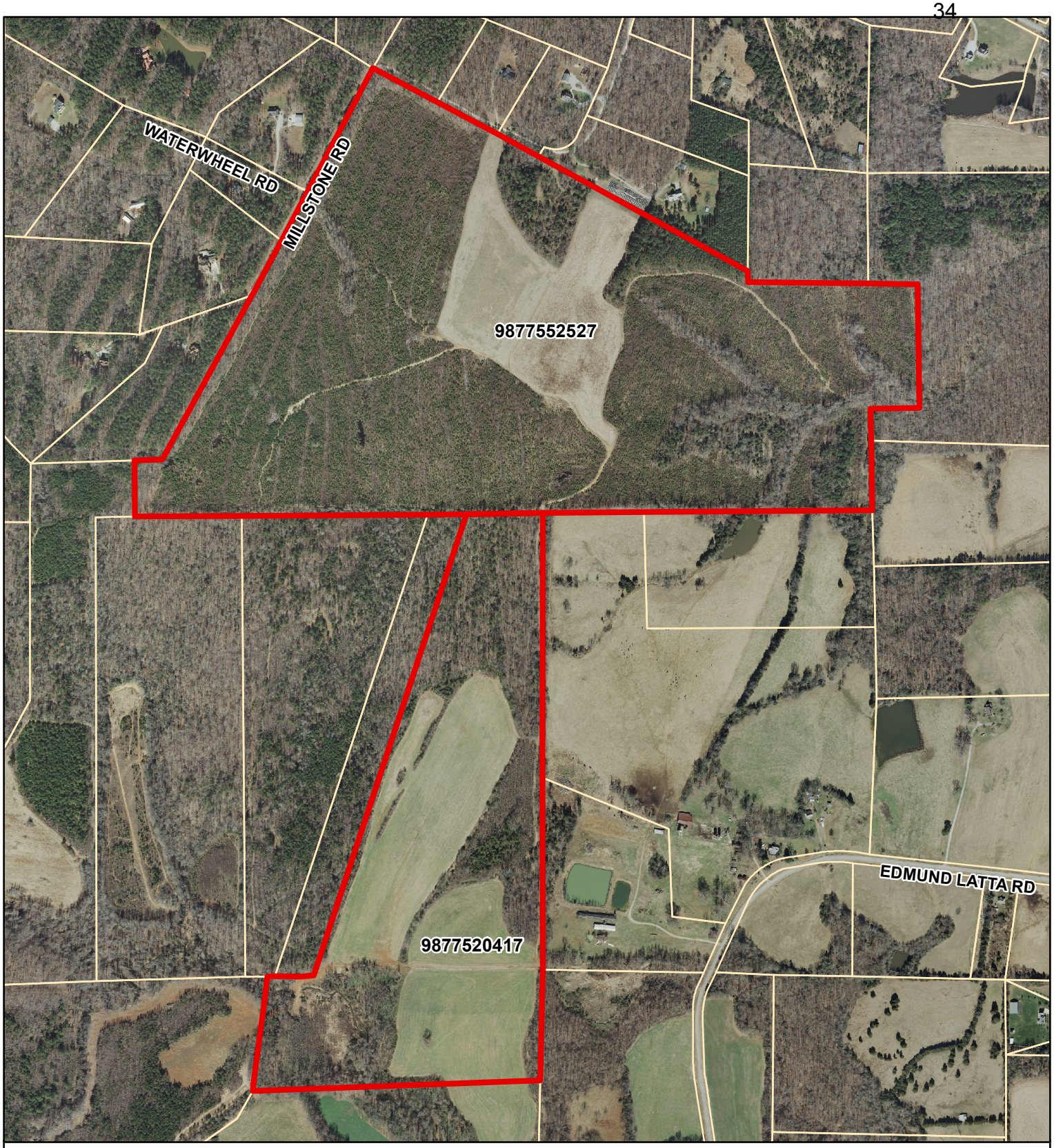


**Milton A. Latta & Sons Dairy Farms Inc.**
**VAD PIN 9877552527 158.0 ( acres)**
**VAD PIN 9877520417 ( 74.6 acres)**
**Aerial Map**

1 inch = 754 feet

Milton A. Latta & Sons Dairy Farms Inc.(622.30 acres)

Parcel boundary

2013 Aerial images

Dept. of Environment, Agriculture, Parks and Recreation Map prepared by Land Records/GIS Div. 11/11/2015
OC 220K <O:gishome\gisproj\land_resource\VAD_RambleRillFarm.mxd

**Application for Orange County**
**Farmland Preservation Program**
**Voluntary and Enhanced Voluntary Agricultural District Program**

**INSTRUCTIONS:**
Before completing the application, please review the VAD/EVAD brochure provided;
Complete the form as completely as possible; sign and date the form, and return to:

Gail M. Hughes
Orange County Dept. of Environment, Agriculture, Parks and Recreation
Soil and Water Conservation Division
P.O. Box 8181 (306 Revere Road)
Hillsborough, NC 27278

**APPLICANT:**

Name: Triangle Land Conservancy - Irwin Farm Nature Preserve

Address: 514 South Duke Street

City: Durham State: NC Zip Code: 27701

Phone Number (Day): 919-908-8809 (Evening): _____

E-Mail: info@triangleland.org

**PROPERTY INFORMATION:**

Property Location/Address(s): 2912 Jones Ferry Rd, Chapel Hill, NC 27516

Agriculture District /Township: Chapel Hill

Parcel Identification Number (PIN): 9757918086 Acres 104.17

Parcel Identification Number (PIN): 9767033423 Acres 131.41

Parcel Identification Number (PIN): 9757944119 Acres 25.69

Parcel Identification Number (PIN): _____ Acres _____

Parcel Identification Number (PIN): _____ Acres _____

Parcel Identification Number (PIN): _____ Acres _____

Total Number of Acres on all tracts of land: 261.27

Does this land have a plan on file with the USDA-Natural Resources Conservation Service or the NC Forest Service?

Yes: ✓ No: _____ If "No", please complete back of form

Is the land enrolled in Present Use Value taxation program with Orange County Tax Office?

Yes: _____ No: X If "No", please complete back of form

**Please complete this section for general information about your farm.**

1. How long have you owned and your farm? 8 years

2. How long have you lived on your farm? _____ years

3. How many acres on your farm are under cultivation? 6 acres (estimate)

4. What are the major crops you plant each year?
CSA farm with Asian Vegetables (Asian chilis, cucumbers, winter squash) and traditional vegetables (tomatoes, peas, ect).

6. How many acres on your farm are used for pasture? _____ acres (estimate)

7. How many acres on your farm are used for woodland/forestry? 240 acres (estimate)

8. If your family has owned and operated the farm over 100 years, would you be interested in the Century Farm Program? This is an Orange County and NC Dept. of Agriculture recognition program for family farms that have continued to farm for over 100 years. _____ yes NA no

## Volunteer opportunity:

The Orange County Agricultural Preservation Board (APB) is made up of volunteers, who are interested in the counties' agricultural concerns: protection, preservation, economic sustainability, and the future of farming and agricultural in Orange County.
If you are interested in being a potential member of the Agricultural Preservation Board, please indicate and signing below.

___ Yes, please inform me when a position on the APB is available.
X No, thank you- not at this time.

Signature: _____

**For questions or more information, please contact:**

**Gail M. Hughes**
Orange County Department of Environment, Agriculture, Parks and Recreation
Soil and Water Conservation Division
P.O. Box 8181 (306 Revere Road)
Hillsborough, NC 27278 (919) 245-2753 (Office) (919) 644-3351 (fax)
ghughes@orangecountync.gov

## For more detailed information about the Voluntary Farmland Program:

Please refer to the Orange County Voluntary Farmland Preservation Program Ordinance, which can be found in Chapter 48 of the Orange County Code of Ordinances, at the following link: http://library.municode.com/index.aspx?clientId=14983 or staff can provide a copy for you.

Supplemental Information on Irvin Farm Nature Preserve

Irvin Farm Nature Preserve was willed to the Triangle Land Conservancy who took ownership of the property in 2007. Since then, TLC has leased approximately 5 acres to the organization, Transplanting Traditions, who manage a CSA farm for refugees from Burma. They grow traditional Asian fruits and vegetables, as well as crops more typical to the piedmont region of NC. More information on their group can be found by visiting www.transplantingtraditions.com.

The remainder of the property is in open fields which are managed for future ag expansion, as well as managed open space for wildlife habitat. There are approximately 20 acres that make up this type of land on the property. The last 240 is mixed pine/hardwood forest which has been thinned in the past and is managed to be converted into an oak/hickory hardwood forest.

TLC owns and manages this land and it will be in conservation in perpetuity. If you have any questions, feel free to contact Kyle Obermiller through email at kobermiller@triangleland.org, or phone at 919-908-0061.

**CONSERVATION AGREEMENT DETAIL of VAD and EVAD:**

**Voluntary Agricultural District (VAD)** conservation agreements are for a period of ten years. The landowner may revoke the agreement through a written request to the Orange County Agricultural Preservation Board. A Conservation Agreement for land within a Voluntary Agricultural District shall be automatically renewed for an additional term of ten years unless either the Agricultural Preservation Board or the landowner(s) gives written notice to the contrary prior to the termination date of the Conservation Agreement. At the end of each ten-year term, the Conservation Agreement shall automatically renew for an additional ten-year term unless notice of termination is given.

**Enhanced Voluntary Agricultural District (EVAD)** conservation agreements are for a period of ten years, but cannot be revoked during the term of the agreement. EVAD enrollment, however, offers landowners additional benefits such as a higher percentage of cost-share funds under the Agricultural Cost Share Program. A Conservation Agreement for an Enhanced Voluntary Agricultural District shall be deemed automatically renewed for an additional term of three years unless either the Agricultural Preservation Board or the landowner(s) gives written notice to the contrary prior to the termination date of the Conservation Agreement. At the end of each three-year term the Conservation Agreement shall automatically renew for an additional three-year term unless notice of termination is given.

**I [We] have read the Conservation Agreement details above and I [we] understand the benefits of the VAD and/or EVAD program.**

SIGNATURE _____ DATE 10-27-2015

_____ I [WE] ARE SEEKING DESIGNATION AS A **VOLUNTARY AGRICULTURAL DISTRICT**

X I [WE] ARE SEEKING DESIGNATION AS AN **ENHANCED VOLUNTARY AGRICULTURAL DISTRICT**

**OWNER[S] CERTIFICATION:**

I [We], the applicant[s] and landowner(s), hereby certify that, to the best of my [our] knowledge, the foregoing application is complete and accurate.

Signature: _____ Date: 10/27/15

Signature: _____ Date: 10/27/15

Signature: _____ Date: _____

Signature: _____ Date: _____

Signature: _____ Date: _____

Signature: _____ Date: _____

Signature: _____ Date: _____

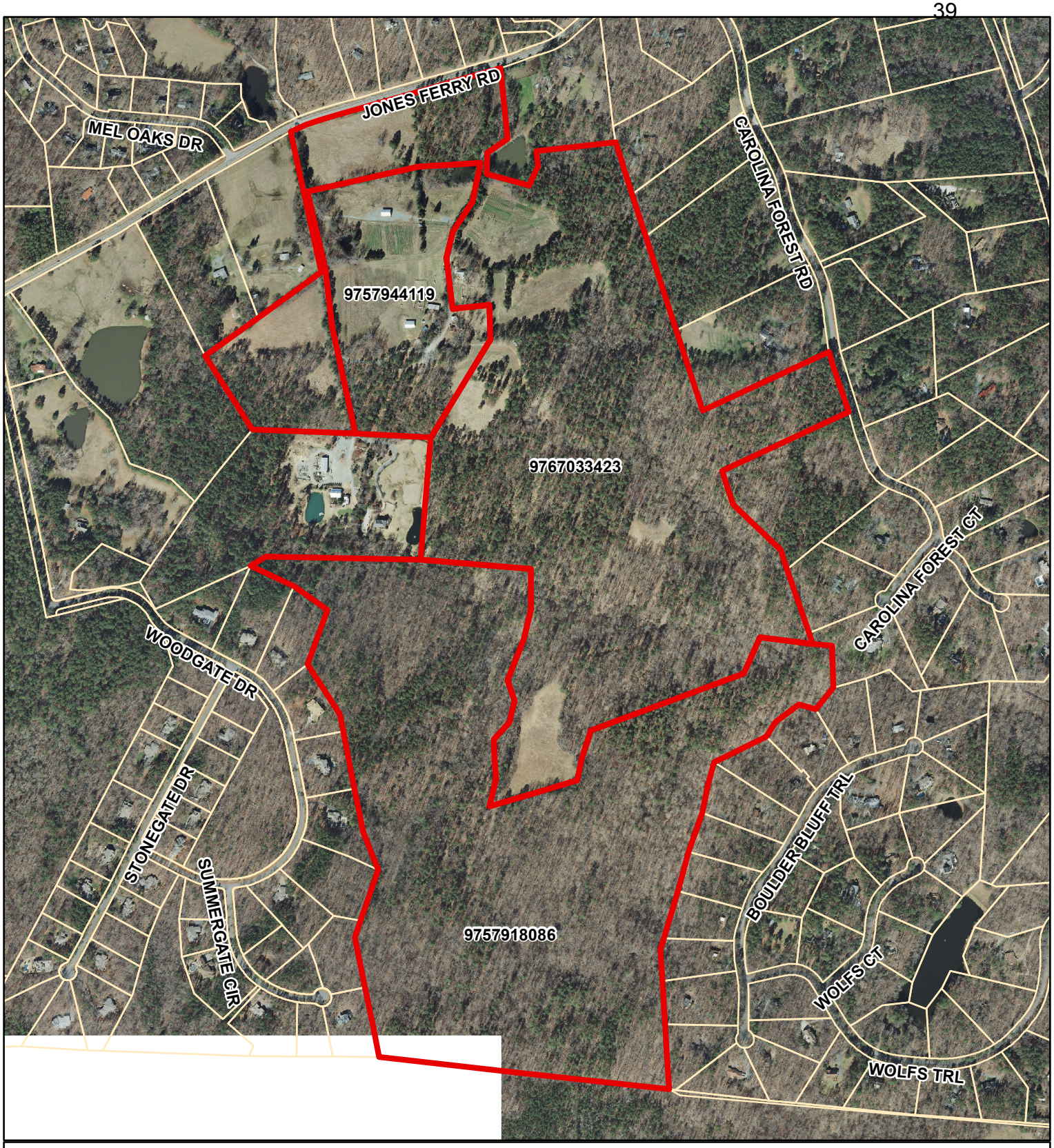


**Triangle Land Conservancy**
**Enhanced Voluntary Agricultural District**
**PIN 9757918086 (104.17 acres)**
**PIN 9767033423 (131.41 acres)**
**PIN 9757944119 (25.69 acres)**
**Aerial Map**

1 inch = 750 feet

Triangle Land Conservancy (261.27 acres)

Parcel boundary

2013 Aerial images

Dept. of Environment, Agriculture, Parks and Recreation Map prepared by Land Records/GIS Div. 11/11/2015 OC 220K <O:gishome\gisproj\land_resource\VAD_RambleRillFarm.mxd

**Application for Orange County**
**Farmland Preservation Program**
**Voluntary and Enhanced Voluntary Agricultural District Program**

**INSTRUCTIONS:**
Before completing the application, please review the VAD/EVAD brochure provided;
Complete the form as completely as possible; sign and date the form, and return to:

Gail M. Hughes
Orange County Dept. of Environment, Agriculture, Parks and Recreation
Soil and Water Conservation Division
P.O. Box 8181 (306 Revere Road)
Hillsborough, NC 27278

**APPLICANT:**

Name: Donald Atwater and Warren Atwater –Atwater Farm

Address: 804 White Cross Rd.

City: Chapel Hill State: NC Zip Code: 27516-7472

Phone Number (Day): 919-942-1094 -Don (Evening): 919-619-2852 Warren

E-Mail: _____

**PROPERTY INFORMATION:**

Property Location/Address(s): 804 White Cross Rd.

Agriculture District /Township: White Cross District

Parcel Identification Number (PIN): 9747053073 Acres 17.68

Parcel Identification Number (PIN): 9737937572 Acres 42.55

Parcel Identification Number (PIN): 9737837332 Acres 49.16

Parcel Identification Number (PIN): 9737925466 Acres 6.86

Parcel Identification Number (PIN): _____ Acres _____

Parcel Identification Number (PIN): _____ Acres _____

Total Number of Acres on all tracts of land: 116.25

Does this land have a plan on file with the USDA-Natural Resources Conservation Service or the NC Forest Service?

Yes: XX No: _____ If "No", please complete back of form

Is the land enrolled in Present Use Value taxation program with Orange County Tax Office?

Yes: XX No: _____ If "No", please complete back of form

**CONSERVATION AGREEMENT DETAIL of VAD and EVAD:**

**Voluntary Agricultural District (VAD)** conservation agreements are for a period of ten years. The landowner may revoke the agreement through a written request to the Orange County Agricultural Preservation Board. A Conservation Agreement for land within a Voluntary Agricultural District shall be automatically renewed for an additional term of ten years unless either the Agricultural Preservation Board or the landowner(s) gives written notice to the contrary prior to the termination date of the Conservation Agreement. At the end of each ten-year term, the Conservation Agreement shall automatically renew for an additional ten-year term unless notice of termination is given.

**Enhanced Voluntary Agricultural District (EVAD)** conservation agreements are for a period of ten years, but cannot be revoked during the term of the agreement. EVAD enrollment, however, offers landowners additional benefits such as a higher percentage of cost-share funds under the Agricultural Cost Share Program. A Conservation Agreement for an Enhanced Voluntary Agricultural District shall be deemed automatically renewed for an additional term of three years unless either the Agricultural Preservation Board or the landowner(s) gives written notice to the contrary prior to the termination date of the Conservation Agreement. At the end of each three-year term the Conservation Agreement shall automatically renew for an additional three-year term unless notice of termination is given.

**I [We] have read the Conservation Agreement details above and I [we] understand the benefits of the VAD and/or EVAD program.**

SIGNATURE Warren Atwater DATE 10-28-15

✓ I [WE] ARE SEEKING DESIGNATION AS A **VOLUNTARY AGRICULTURAL DISTRICT**

_____ I [WE] ARE SEEKING DESIGNATION AS AN **ENHANCED VOLUNTARY AGRICULTURAL DISTRICT**

**OWNER[S] CERTIFICATION:**

I [We], the applicant[s] and landowner(s), hereby certify that, to the best of my [our] knowledge, the foregoing application is complete and accurate.

Signature: Warren Atwater Date: 10-28-15

Signature: Donald Atwater Date: 11-9-15

Signature: _____ Date: _____

Signature: _____ Date: _____

Signature: _____ Date: _____

Signature: _____ Date: _____

Signature: _____ Date: _____

**Please complete this section for general information about your farm.**

1. How long have you owned and your farm? _____ years since ~1940- father

2. How long have you lived on your farm? 74 years

3. How many acres on your farm are under cultivation? 95 acres (estimate)

4. What are the major crops you plant each year?
hay crops (formerly a dairy farm)

6. How many acres on your farm are used for pasture? 0 acres (estimate)

7. How many acres on your farm are used for woodland/forestry? ____ acres (estimate)

8. If your family has owned and operated the farm over 100 years, would you be interested in the Century Farm Program? This is an Orange County and NC Dept. of Agriculture recognition program for family farms that have continued to farm for over 100 years. _____ yes ____no n/a

## Volunteer opportunity:

The Orange County Agricultural Preservation Board (APB) is made up of volunteers, who are interested in the counties' agricultural concerns: protection, preservation, economic sustainability, and the future of farming and agricultural in Orange County.
If you are interested in being a potential member of the Agricultural Preservation Board, please indicate and signing below.

___ Yes, please inform me when a position on the APB is available. (possibly Warren)
✓ No, thank you- not at this time. (Don)

Signature: _____

**For questions or more information, please contact:**

**Gail M. Hughes**
Orange County Department of Environment, Agriculture, Parks and Recreation
Soil and Water Conservation Division
P.O. Box 8181 (306 Revere Road)
Hillsborough, NC 27278 (919) 245-2753 (Office) (919) 644-3351 (fax)
ghughes@orangecountync.gov

## For more detailed information about the Voluntary Farmland Program:

Please refer to the Orange County Voluntary Farmland Preservation Program Ordinance, which can be found in Chapter 48 of the Orange County Code of Ordinances, at the following link: http://library.municode.com/index.aspx?clientId=14983 or staff can provide a copy for you.

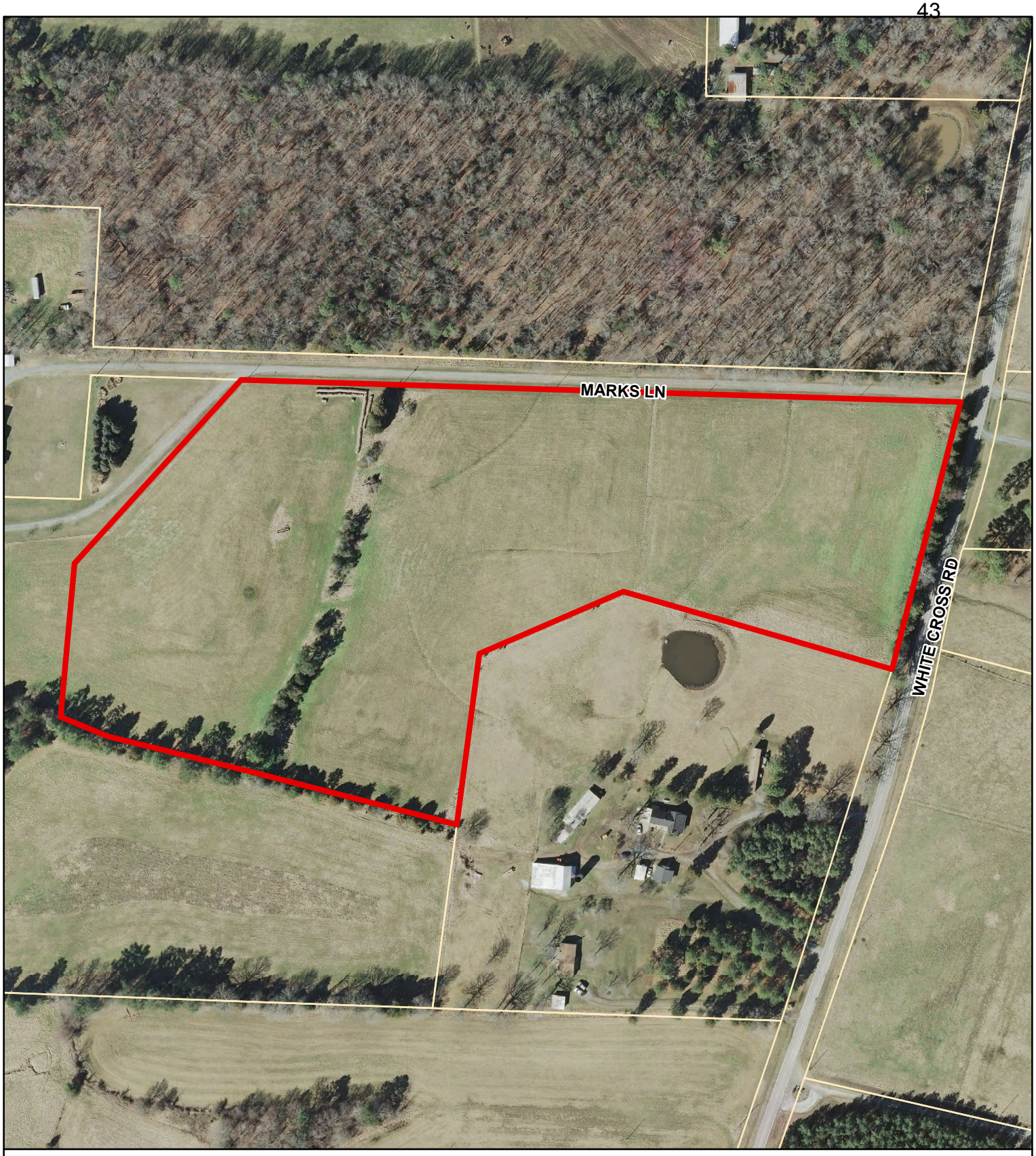


**Atwater Farm**
**Voluntary Agricultural District**
**PIN 9747053073 (17.68 acres)**
**Aerial Map**

Atwater Farm (116.25 acres)

Parcel boundary

2013 Aerial images

1 inch = 228 feet

Dept. of Environment, Agriculture, Parks and Recreation Map prepared by Land Records/GIS Div. 11/11/2015 OC 220K <O:gishome\gisproj\land_resource\VAD_RambleRillFarm.mxd

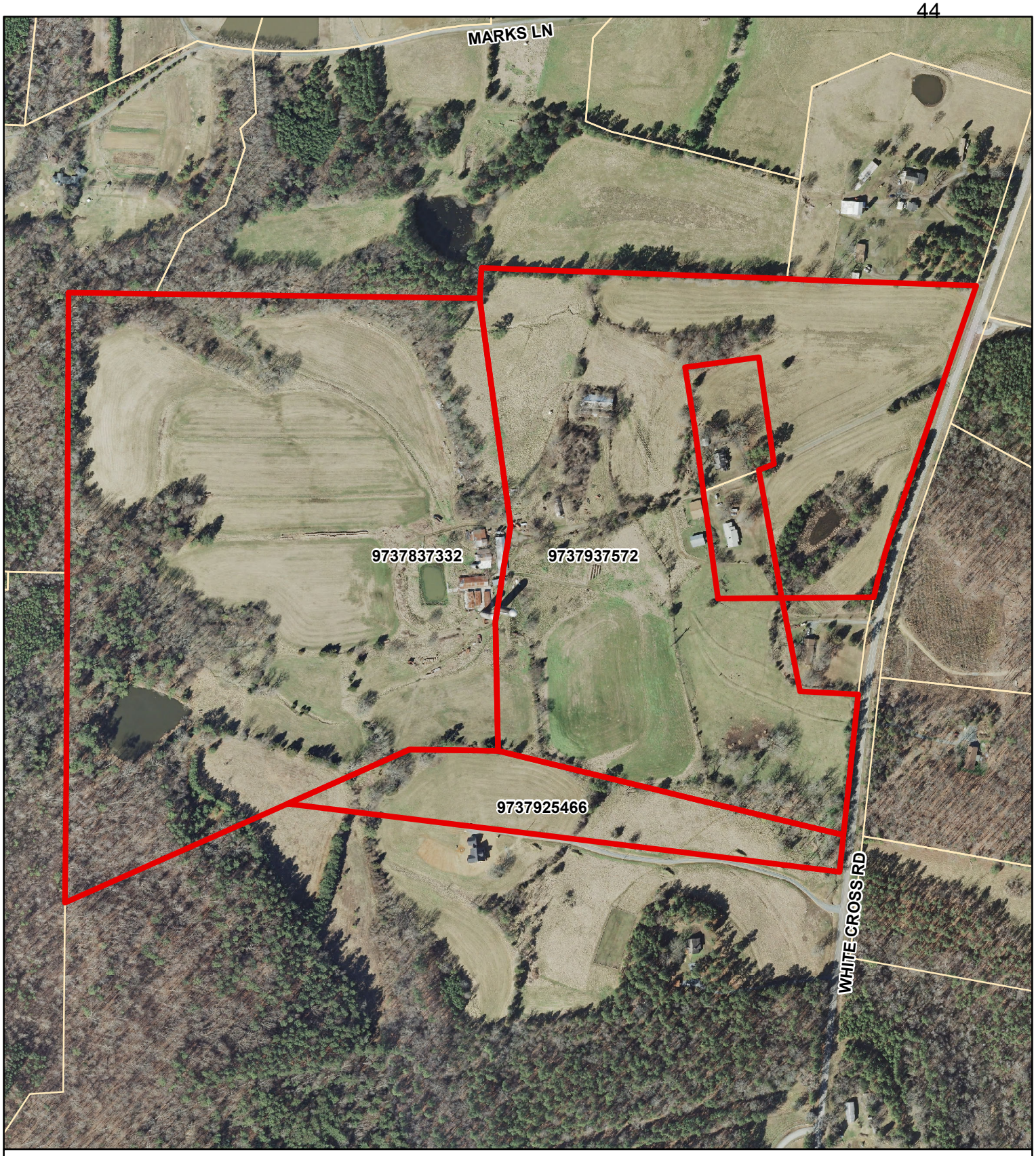


**Atwater Farm**
**Voluntary Agricultural District**
**PIN 9737837332 (49.16 acres) acres)**
**PIN 9737937572 ( 42.55 acres)**
**PIN 9737925466 (6.867 acres)**
**Aerial Map**

Atwater Farm (116.25 acres)

Parcel boundary

2013 Aerial images

1 inch = 421 feet

Dept. of Environment, Agriculture, Parks and Recreation Map prepared by Land Records/GIS Div. 11/11/2015 OC 220K <O:gishome\gisproj\land_resource\VAD_RambleRillFarm.mxd

**Application for Orange County**
**Farmland Preservation Program**
**Voluntary and Enhanced Voluntary Agricultural District Program**

**INSTRUCTIONS:**
Before completing the application, please review the VAD/EVAD brochure provided;
Complete the form as completely as possible; sign and date the form, and return to:

Gail M. Hughes
Orange County Dept. of Environment, Agriculture, Parks and Recreation
Soil and Water Conservation Division
P.O. Box 8181 (306 Revere Road)
Hillsborough, NC 27278

**APPLICANT:**

Name: Durham Farm -- Gerry W. Durham, Milton G. Durham and Kimberly Durham

Address: 847 White Cross Rd.

City: Chapel Hill State: NC Zip Code: 27516-7473

Phone Number (Day): Gerry -919-933-9616 (Evening): Milton 919-619-4966

E-Mail: mdurham@townofchapelhill.org

**PROPERTY INFORMATION:**

Property Location/Address(s): 847 and 835 White Cross Rd.

Agriculture District /Township: White Cross District

Parcel Identification Number (PIN): 9747348144 Acres 135.13 Gerry/Milton

Parcel Identification Number (PIN): 9747147362 Acres 23.85 Gerry

Parcel Identification Number (PIN): 9747149919 Acres 14.51 Gerry

Parcel Identification Number (PIN): 9747134784 Acres 9.0 Gerry

Parcel Identification Number (PIN): 9747357077 Acres 15.07 Milton/Kimberly

Parcel Identification Number (PIN): _____ Acres _____

Total Number of Acres on all tracts of land: 197.56

Does this land have a plan on file with the USDA-Natural Resources Conservation Service or the NC Forest Service?

Yes: xx No: _____ If "No", please complete back of form

Is the land enrolled in Present Use Value taxation program with Orange County Tax Office?

Yes: xx No: _____ If "No", please complete back of form

**CONSERVATION AGREEMENT DETAIL of VAD and EVAD:**

**Voluntary Agricultural District (VAD)** conservation agreements are for a period of ten years. The landowner may revoke the agreement through a written request to the Orange County Agricultural Preservation Board. A Conservation Agreement for land within a Voluntary Agricultural District shall be automatically renewed for an additional term of ten years unless either the Agricultural Preservation Board or the landowner(s) gives written notice to the contrary prior to the termination date of the Conservation Agreement. At the end of each ten-year term, the Conservation Agreement shall automatically renew for an additional ten-year term unless notice of termination is given.

**Enhanced Voluntary Agricultural District (EVAD)** conservation agreements are for a period of ten years, but cannot be revoked during the term of the agreement. EVAD enrollment, however, offers landowners additional benefits such as a higher percentage of cost-share funds under the Agricultural Cost Share Program. A Conservation Agreement for an Enhanced Voluntary Agricultural District shall be deemed automatically renewed for an additional term of three years unless either the Agricultural Preservation Board or the landowner(s) gives written notice to the contrary prior to the termination date of the Conservation Agreement. At the end of each three-year term the Conservation Agreement shall automatically renew for an additional three-year term unless notice of termination is given.

**I [We] have read the Conservation Agreement details above and I [we] understand the benefits of the VAD and/or EVAD program.**

Milton B. Durham Kimberly T Durham

SIGNATURE Gerry W Durham DATE 11/11/2015

✓ I [WE] ARE SEEKING DESIGNATION AS A **VOLUNTARY AGRICULTURAL DISTRICT**

_____ I [WE] ARE SEEKING DESIGNATION AS AN **ENHANCED VOLUNTARY AGRICULTURAL DISTRICT**

**OWNER[S] CERTIFICATION:**

I [We], the applicant[s] and landowner(s), hereby certify that, to the best of my [our] knowledge, the foregoing application is complete and accurate.

| | | |
|---|---|---|
| Gerry | Signature: Gerry W. Durham | Date: 11-11-15 |
| Milton | Signature: Milton B Durham | Date: 11/11/2015 |
| Kimberly | Signature: Kimberly T Durham | Date: 11/11/2015 |
| | Signature: _____ | Date: _____ |
| | Signature: _____ | Date: _____ |
| | Signature: _____ | Date: _____ |
| | Signature: _____ | Date: _____ |

**Please complete this section for general information about your farm.**

1. How long have you owned and your farm? 45 years
2. How long have you lived on your farm? 75 years
3. How many acres on your farm are under cultivation? 0 acres (estimate)
4. What are the major crops you plant each year?
   grass grazing cattle
6. How many acres on your farm are used for pasture? 90 acres (estimate)
7. How many acres on your farm are used for woodland/forestry? 60 acres (estimate)
8. If your family has owned and operated the farm over 100 years, would you be interested in the Century Farm Program? This is an Orange County and NC Dept. of Agriculture recognition program for family farms that have continued to farm for over 100 years. _____ yes ✓ no

## Volunteer opportunity:

The Orange County Agricultural Preservation Board (APB) is made up of volunteers, who are interested in the counties' agricultural concerns: protection, preservation, economic sustainability, and the future of farming and agricultural in Orange County.
If you are interested in being a potential member of the Agricultural Preservation Board, please indicate and signing below.

___ Yes, please inform me when a position on the APB is available.
✓ No, thank you- not at this time.

Signature: Henry W. Durham

**For questions or more information, please contact:**

**Gail M. Hughes**
Orange County Department of Environment, Agriculture, Parks and Recreation
Soil and Water Conservation Division
P.O. Box 8181 (306 Revere Road)
Hillsborough, NC 27278 (919) 245-2753 (Office) (919) 644-3351 (fax)
ghughes@orangecountync.gov

## For more detailed information about the Voluntary Farmland Program:

Please refer to the Orange County Voluntary Farmland Preservation Program Ordinance, which can be found in Chapter 48 of the Orange County Code of Ordinances, at the following link: http://library.municode.com/index.aspx?clientId=14983 or staff can provide a copy for you.

**Durham Farm**
**Voluntary Agricultural District**
**PIN 9747134784 (9.0 acres)**
**PIN 9747147362 (23.85 acres)**
**PIN 9747149919 (14.51 acres)**
**PIN 9747348144 (135.13 acres)**
**PIN 9747357077 (15.07 acres)**
**Aerial Map**

Durham Farm (197.56 acres)

Parcel boundary

2013 Aerial images

1 inch = 228 feet

Dept. of Environment, Agriculture, Parks and Recreation Map prepared by Land Records/GIS Div. 11/11/2015
OC 220K <O:gishome\gisproj\land_resource\VAD_RambleRillFarm.mxd

**ORANGE COUNTY**
**BOARD OF COMMISSIONERS**

**ACTION AGENDA ITEM ABSTRACT**
**Meeting Date:** December 7, 2015

**Action Agenda**
**Item No.** 4-c

**SUBJECT:** Proclamation – Bill of Rights Day

**DEPARTMENT:** BOCC

**PUBLIC HEARING: (Y/N)** No

**ATTACHMENT(S):**
Proclamation

**INFORMATION CONTACT:**

Donna Baker, Clerk to the Orange County Board of Commissioners
(919) 245-2130

**PURPOSE:** To adopt a proclamation to officially recognize Bill of Rights Day in Orange County during the month of December.

**BACKGROUND:** The necessary States ratified the **Bill of Rights**, the first ten amendments to the United States Constitution, on December 15, 1791. The **Bill of Rights** protects every person of this state and nation from the infringement of basic human and civil rights; and the freedoms of speech and association and the right to due process and equal protection of the law, as embodied in the **Bill of Rights**, are a model for democratic institutions and laws all over the world.

**FINANCIAL IMPACT:** None

**SOCIAL JUSTICE IMPACT:** The following Orange County Social Justice Goals are applicable to this agenda item:

- **GOAL: FOSTER A COMMUNITY CULTURE THAT REJECTS OPPRESSION AND INEQUITY**
  The fair treatment and meaningful involvement of all people regardless of race or color; religious or philosophical beliefs; sex, gender or sexual orientation; national origin or ethnic background; age; military service; disability; and familial, residential or economic status.

- **GOAL: ENABLE FULL CIVIC PARTICIPATION**
  Ensure that Orange County residents are able to engage government through voting and volunteering by eliminating disparities in participation and barriers to participation.

**RECOMMENDATION(S**): The Manager recommends the Board adopt the Proclamation regarding the Bill of Rights Day and authorize the Chair to sign the Proclamation.

# ORANGE COUNTY BOARD OF COMMISSIONERS

# P R O C L A M A T I O N

# Bill of Rights Day

## DECEMBER 15, 2015

**Whereas,** the necessary states ratified the **Bill of Rights**, the first ten amendments to the United States Constitution, on December 15, 1791; and

**Whereas**, the **Bill of Rights** protects every person of this state and nation from the infringement of basic human and civil rights; and

**Whereas**, the freedoms of speech and association and the right to due process and equal protection of the law, as embodied in the **Bill of Rights**, are a model for democratic institutions and laws all over the world; and

**Whereas**, the people of North Carolina stood strong in withholding ratification of the Constitution until the **Bill of Rights** was added to ensure their inalienable rights; and

**Whereas,** the Orange County Board of Commissioners demonstrated its commitment to "upholding the civil rights and civil liberties of all persons in Orange County and their free exercise and enjoyment of any and all rights and privileges secured by our constitutions and laws of the United States, the State of North Carolina, and Orange County," in a May 20, 2003 approved resolution entitled "A Resolution Regarding the Protection of Civil Rights and Civil Liberties"; and

**Whereas**, the Orange County Board of Commissioners reaffirmed the protections of all its residents by passing "A Resolution Opposing the Use of Local Law Enforcement to Enforce Civil Immigration Law and Policy" on January 23, 2007;

**Now, Therefore Be It Resolved** that we the Orange County Board of Commissioners do hereby proclaim **December 15, 2015** as **"BILL OF RIGHTS DAY"** in Orange County and commend this observance to all people.

This, the 7th day of December 2015.

_____

Earl McKee, Chair
Orange County Board of Commissioners

**ORANGE COUNTY**
**BOARD OF COMMISSIONERS**

**ACTION AGENDA ITEM ABSTRACT**
**Meeting Date:** December 7, 2015

**Action Agenda**
**Item No.** 4-d

**SUBJECT:** Proclamation - Human Rights Day, Bill of Rights Day, and Human Rights Week

**DEPARTMENT:** Housing, Human Rights, and Community Development

**PUBLIC HEARING: (Y/N)** No

**ATTACHMENT(S):**
Proclamation

**INFORMATION CONTACT:**
Audrey Spencer-Horsley,
(919) 245-2490

**PURPOSE:** To officially recognize Human Rights Day, Bill of Rights Day and Human Rights Week in Orange County during the month of December.

**BACKGROUND:** On December 10, 1948 the members of the United Nations signed the Universal Declaration of Human Rights and countries of different political, economic, and social systems agreed to the fundamental rights that all people share solely on the basis of their common humanity. Two years later, the UN General Assembly proclaimed December 10th as Human Rights Day. Henceforth, this "common standard of achievement for all peoples and all nations" is recognized and celebrated by the United States and countries in all regions of the world on this date.

First proclaimed on December 15, 1941 by President Franklin D. Roosevelt, Bill of Rights Day recognizes the first ten amendments of the Constitution of the United States as the "great American charter of personal liberty and human dignity". Throughout the nation December 10 – 16th is recognized as Human Rights Week, encompassing Human Rights Day and Bill of Rights Day.

The Orange County Human Relations Commission (HRC) will participate in a Human Rights Program on Thursday, December 10, 2015 from 9:00 to 11:00 a.m. The program, hosted by the County's Department on Aging and held at the Seymour Center, will feature a showing of the film: *Story of Human Rights: A Historical View,* followed by discussion. This is the second year that the film and discussion will be hosted in Orange County in recognition of Human Rights Day. The HRC hopes that the acknowledgment of Human Rights will encourage Orange County residents, as individuals, to take a stand against social injustice and continue to work together to make freedom, justice, and equal opportunities available for all.

**FINANCIAL IMPACT:** There is no financial impact associated with consideration of the proclamation.

**SOCIAL JUSTICE IMPACT:** The following Orange County Social Justice Goals are applicable to this agenda item:

- **GOAL: FOSTER A COMMUNITY CULTURE THAT REJECTS OPPRESSION AND INEQUITY**
  The fair treatment and meaningful involvement of all people regardless of race or color; religious or philosophical beliefs; sex, gender or sexual orientation; national origin or ethnic background; age; military service; disability; and familial, residential or economic status.

- **GOAL: ENABLE FULL CIVIC PARTICIPATION**
  Ensure that Orange County residents are able to engage government through voting and volunteering by eliminating disparities in participation and barriers to participation.

The Board of County Commissioners formed the Human Relations Commission by resolution on June 16, 1987. Its charge, among other things, was to “encourage mutual understanding and fair treatment of all citizens”. This proclamation and the referenced Human Rights Day program will further one of the original purposes of the Human Relations Commission, and educate the community about the U.S. Bill of Rights and the Universal Declaration of Human Rights.

**RECOMMENDATION(S):** The Manager recommends the Board adopt the Proclamation regarding Human Rights Day, Bill of Rights Day and Human Rights Week and authorize the Chair to sign the Proclamation.

# ORANGE COUNTY BOARD OF COMMISSIONERS

# PROCLAMATION

**WHEREAS**, on December 10, 1948, the member states of the United Nations signed the Universal Declaration of Human Rights and countries of different political, economic and social systems agreed on the fundamental rights that all people share solely on the basis of their common humanity; and

**WHEREAS,** Human Rights Day and Human Rights Week were adopted by the United Nations in connection with the Universal Declaration of Human Rights; and

**WHEREAS,** the Bill of Rights Day was first declared in 1941 by President Franklin Delano Roosevelt to commemorate the 1791 Ratification of the Bill of Rights; and

**WHEREAS,** it was the North Carolina convention, held in Hillsborough, which was instrumental regarding the inclusion of a Bill of Rights as part of ratifying the United States Constitution; and

**WHEREAS,** the Bill of Rights guarantees, among other basic liberties, freedom of speech and of the press as well as freedom of religion and association; and

**WHEREAS,** the Bill of Rights states that no person shall be deprived of life, liberty or property without due process of law and establishes fundamental rules of fairness in judicial proceedings, including the right to trial by jury; and

**WHEREAS,** the primary responsibility to promote respect for these rights and freedoms lies with each individual in Orange County, and each of us can play a major role in enhancing human rights; and

**WHEREAS**, the residents of Orange County support Human Rights and recognize that the "inherent dignity and the equal and inalienable rights of all members of the human family are the foundation of freedom, justice and peace;"

**NOW, THEREFORE,** We, The Board of County Commissioners of Orange County, North Carolina, do hereby proclaim

December 10, 2015 as **Human Rights Day**
and
December 15, 2015 as **Bill of Rights Day**
and
December 10 – 16, 2015 as **Human Rights Week**

in Orange County and challenge residents to study and promote the ideals contained in these documents to the end that freedom, justice, and equality shall not perish but will flourish and be made available to all.

***This the 7th day of December 2015.***

_____
Earl McKee, Chair
Orange County Board of Commissioners

**ORANGE COUNTY**
**BOARD OF COMMISSIONERS**

**ACTION AGENDA ITEM ABSTRACT**
**Meeting Date:** December 7, 2015

**Action Agenda Item No.** 4-e

**SUBJECT:** Presentation on County Financing of Public Schools

**DEPARTMENT:** County Manager

**PUBLIC HEARING: (Y/N)** No

**ATTACHMENT(S):**

1) NCACC - Basics of County Financing of Public Schools

**INFORMATION CONTACT:**

Bonnie Hammersley, 919-245-2300
Dr. Linda Millsaps, North Carolina Associate of County Commissioners (NCACC) Research Director

**PURPOSE:** To discuss North Carolina's governing and financing structure for public education including the different roles that counties have in funding public schools.

**BACKGROUND:** The Board of Orange County Commissioners (BOCC) requested a presentation clarifying the legal roles and responsibilities of the County and the school districts in requesting and appropriating operating and capital funds.

**FINANCIAL IMPACT:** There is no immediate financial impact related to this discussion.

**SOCIAL JUSTICE IMPACT:** The following Orange County Social Justice Goal is applicable to this item:

- **GOAL: ENABLE FULL CIVIC PARTICIPATION**
  Ensure that Orange County residents are able to engage government through voting and volunteering by eliminating disparities in participation and barriers to participation.

**RECOMMENDATION(S):** The Manager recommends that the Board receive the presentation and provide any comments and questions.

NORTH CAROLINA
CENTER FOR COUNTY RESEARCH

# Basics of County Financing of Public Schools

## North Carolina's Unique Financing & Governance Structure for Public Education

- NC counties are charged with building, equipping and maintaining school facilities; G.S. 115C-408(b) stipulates that public school facilities requirements will be met by county governments.
- NC counties are recognized statutorily as the local taxing authorities for independently elected school boards; in most other states, the school system acts as its own taxing authority.
- The State of NC is charged with funding school operations, known as current expense; G.S. 115C-408(b) stipulates that the state, from state revenues, will fund public school operating instructional expense as defined in the standard course of study.
- NC counties supplement state school operating expenses. G.S. 115C-426(e) stipulates that local current expense funding, largely meaning county funding of school operations, is "sufficient" when added to state resources, "within financial resources and consistent with the fiscal policies of the board of county commissioners."
- School expenses—operating, capital and debt service—consume nearly 35% of total county annual budgets.
- State statutes expressly permit LEAs to sue counties over "sufficiency" of current expense or capital funding levels, leaving courts to decide sufficiency. School boards are not expressly permitted to sue the state or federal governments for lack of sufficient funding, and no other entity is specifically granted this power to sue a taxing authority over funding sufficiency.
- Some counties have multiple school districts within county boundaries, typically referred to as "city districts"; NC city governments have no authority and do not finance school operations or capital; counties fund city districts by allocating school operating dollars proportionately based on per pupil allotment.

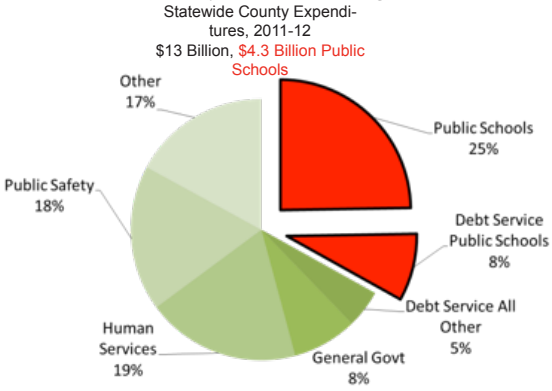


County Spending

## County Funding of School Capital Needs

- County appropriations for school capital projects are usually project-specific.
- As local taxing authority, counties issue debt for school construction and renovation projects. The school facility asset reverts to the school board's ownership while the liability remains with the county.
- School districts must report school capital needs per a statewide 5-year survey. Based on the most recent survey, school systems report nearly $8.2 billion in school construction and renovation needs.
- Counties are required to set aside a portion of county-levied sales taxes for school capital needs, 45% of one penny tax levy or roughly $350 million in 2013.
- Property tax revenues are also an important source of county funding for school facilities. Counties are increasingly relying on property taxes as state-shared sources of revenue, such as corporate tax (ADM Fund) and lottery proceeds, dry up.

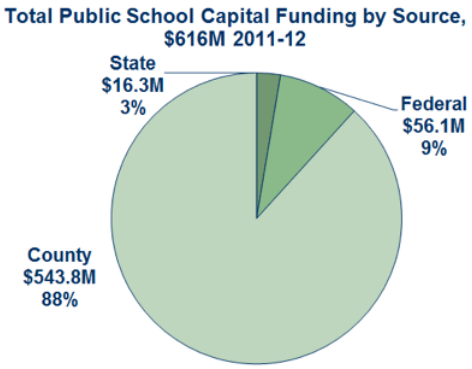


School Spending

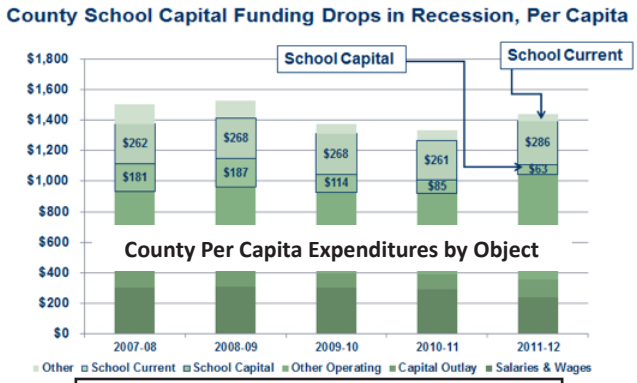


County Spending

- During the recession, counties sacrificed school capital investments to maintain classroom operations support. Between 2008 and 2012, county school capital investment plummeted from $1.4 billion in 2008 to $545 million in 2012.

## County Funding of Current Expense (School Operating)

- NC counties fund $3.2 billion to support 26% of public schools' total spending.
- Counties spend over $2.5 billion to augment state school operating dollars.

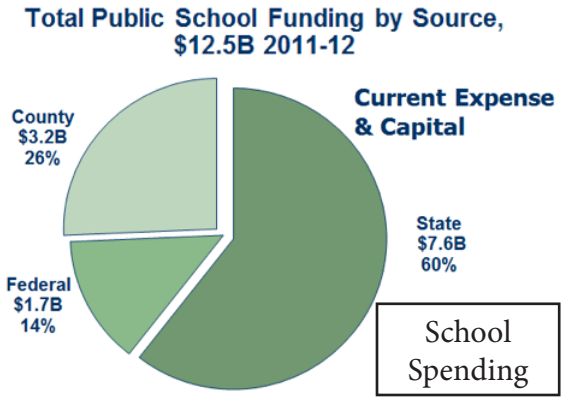


School Spending

## Trends in County School Funding

- County funding of current expense has been growing over time; federal funds have been substituted for state funds over time.

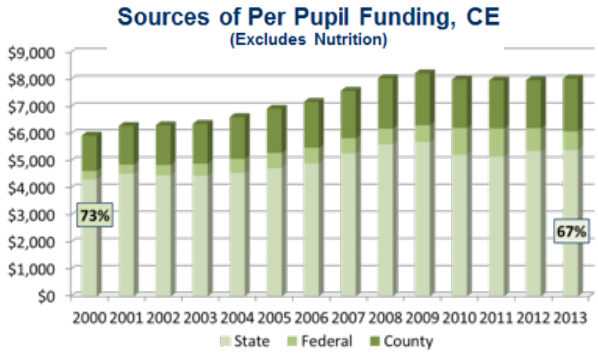


## Mechanics of County School Funding

- Counties generally provide school current expense funds in a lump sum appropriation, allocating 1/12 of the total appropriation each month; school systems may use county current expense dollars on any allowable expenditure, including additional school personnel (see chart). School districts largely use county dollars for non-certified and administrator positions.
- Counties and school boards may agree to fund teacher salary supplements, using county funds, to increase the state school personnel salary schedule. School boards may use county funds to supplement other school personnel through supplements. In 2012-13, 106 LEAs funded teacher salary supplements, ranging from $147 to $6,031 annually, with a weighted state average of $3,478. 108 have principal supplements, ranging from $175 to $28,673 annually, with a weighted state average of $11,338. Total county costs for all supplements, including teachers, principals, coaches, band leaders, and superintendents, exceed $430 million annually.

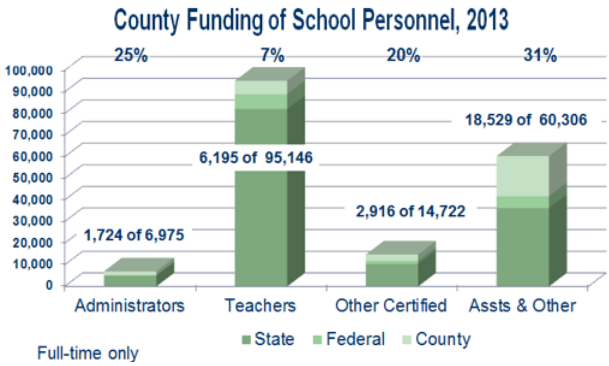


- State surplus school funds revert to state at close of fiscal year while county surplus funds remain in the school district's fund balance under the control of the school board. From 2008 to 2012, school fund balances increased 79% to $664.7 million.
- The school board allocates county funds to individual schools—counties cannot allocate funds directly to schools.
- Each school district must share its county current expense funds, but not capital funds, with charter schools based on per pupil allocation for each charter school student whose home residency is in the county. County school funding for charter schools follows the student, including those students who attend charter schools outside of the county.

**ORANGE COUNTY**
**BOARD OF COMMISSIONERS**

**ACTION AGENDA ITEM ABSTRACT**
**Meeting Date:** December 7, 2015

**Action Agenda Item No.** 6-a

**SUBJECT:** MINUTES

**DEPARTMENT:**

**PUBLIC HEARING: (Y/N)** No

**ATTACHMENT(S):**

Draft Minutes

**INFORMATION CONTACT:**
Donna Baker, 245-2130

**PURPOSE:** To correct and/or approve the minutes as submitted by the Clerk to the Board as listed below:

| | |
|---|---|
| November 5, 2015 | BOCC Regular Meeting |
| November 10, 2015 | BOCC Work Session |

**BACKGROUND:** In accordance with 153A-42 of the General Statutes, the Governing Board has the legal duty to approve all minutes that are entered into the official journal of the Board's proceedings.

**FINANCIAL IMPACT: NONE**

**RECOMMENDATION(S):** The Manager recommends the Board approve minutes as presented or as amended.

**Attachment 1**

**DRAFT** **MINUTES**
**BOARD OF COMMISSIONERS**
**REGULAR MEETING**
**NOVMEBER 5, 2015**
**7:00 p.m.**

The Orange County Board of Commissioners met in regular session on Thursday, November 5, 2015 at 7:00 p.m. at the Whitted Building in Hillsborough, N.C.

**COUNTY COMMISSIONERS PRESENT**: Chair McKee and Commissioners Mia Burroughs, Mark Dorosin, Bernadette Pelissier, Renee Price and Penny Rich
**COUNTY COMMISSIONERS ABSENT**: Commissioner Jacobs
**COUNTY ATTORNEYS PRESENT**: John Roberts
**COUNTY STAFF PRESENT**: County Manager Bonnie Hammersley and Clerk to the Board Donna Baker (All other staff members will be identified appropriately below)

Chair McKee called the meeting to order at 7:07 p.m.
Chair McKee said that Commissioner Jacobs would be unable to attend tonight.

**1. Additions or Changes to the Agenda**

- White sheet – Additional information for item 5-a: North Carolina Community Transportation Program Administrative and Capital Grant Applications FY 2017
- Pink sheet – Revised Abstract for item 5-b: Zoning Atlas Amendment - Jacobs Glass Rezoning - Closure of Public Hearing and Action (No Additional Comments Accepted)
- White sheets – PowerPoint for Item 5-e: Public Hearing Process

**PUBLIC CHARGE**

*Chair McKee dispensed with the reading of the public charge.*

**2. Public Comments**

**a. Matters not on the Printed Agenda**

Maxecine Mitchell said she received a notice today from Animal Control stating she was being cruel to her dogs as they were outside and the water container had some leaves in the dish. She said she lives in the County with a lot of oak trees and she is upset for being cited for not having a clean water container. She said she is a volunteer on the Planning Board, which is a body that strives to create logical ordinances, and she is not sure why she was cited. She said her doghouses are dry and clean but one of them is broken, for which she was cited as well. She said she was additionally cited for not having the doghouses raised above the ground but noted the doghouses are tremendously heavy. She said she is single and unemployed but her dogs are healthy and live better than she does.

She said she talked with Bob Marotto, the Director of Animal Services, and he told her they would come out to talk with her. She hoped a solution could be reached.

Chair McKee asked Bonnie Hammersley to consult with Animal Control.

Susanna Birdsong said she is here as Policy Counsel for the American Civil Liberties Union (ACLU) of North Carolina, and she is here to talk about House Bill (HB) 318. She said this law is making our State unfriendly. She reviewed the following:

**Analysis of HB 318--"Sanctuary Cities" Provisions**
**North Carolina Justice Center**
**October 30, 2015**
**SUMMARY OF ANALYSIS**
Our review of "sanctuary cities" provisions contained in House Bill 318 leads to the following conclusions, as detailed further in the analysis that follows:
☐HB 318 applies to municipal police departments, but not sheriffs.
☐HB 318 does not require a city to affirmatively adopt any policy involving its agents in the enforcement of federal immigration laws.
☐HB 318 does not expand or change the limited authority of local law enforcement to enforce federal immigration laws.
☐HB 318 does not allow a warrantless arrest of an individual based only on a suspicion or confirmation that the individual is in the United States without federal authorization.
☐HB 318 does not allow detaining an individual for any period of time based on mere suspicion or confirmation that the individual is in the United States without federal authorization.
☐HB 318 does not allow detaining or extending the detention of an individual solely to verify the individual's immigration status.
☐HB 318 does not allow the prolonging of an otherwise lawful stop for purposes of conducting an immigration inquiry.
☐HB 318 does not require law enforcement to gather information about citizenship status or immigration status.
☐HB 318 does not allow law enforcement to engage in racial profiling.
**I. INTRODUCTION**
The other part of the law references the sanctuary law and she said the law does not apply to any laws adopted by sheriffs and their employees. House Bill 318 purports to prohibit adoption of sanctuary city ordinances. The pertinent part of the legislation reads as follows:
**SECTION 15.(a)** Article 6 of Chapter 153A of the General Statutes is amended by adding a new section to read:
"**§ 153A-145.5. Adoption of sanctuary ordinance prohibited.**
(a) No county may have in effect any policy, ordinance, or procedure that limits or restricts the enforcement of federal immigration laws to less than the full extent permitted by federal law.
(b) No county shall do any of the following related to information regarding the citizenship or immigration status, lawful or unlawful, of any individual:
(1) Prohibit law enforcement officials or agencies from gathering such information.
(2) Direct law enforcement officials or agencies not to gather such information.
(3) Prohibit the communication of such information to federal law enforcement agencies."
**SECTION 15.(b)** Article 8 of Chapter 160A of the General Statutes is amended by adding a new section to read:
"**§ 160A-499.4. Adoption of sanctuary ordinances prohibited.**
(a) No city may have in effect any policy, ordinance, or procedure that limits or restricts the enforcement of federal immigration laws to less than the full extent permitted by federal law.
(b) No city shall do any of the following related to information regarding the citizenship or immigration status, lawful or unlawful, of any individual:
(1) Prohibit law enforcement officials or agencies from gathering such information.

(2) Direct law enforcement officials or agencies not to gather such information.
(3) Prohibit the communication of such information to federal law enforcement agencies."

She said there is confusion regarding the application of the law, and who is intended to be included as a “government official”. She said this term is not defined anywhere in the law. She said the ACLU is urging that the scope of this bill be limited or it may lead to a deprivation of fundamental rights. She said there is appropriate concern within immigrant communities regarding this law.

Susanna Birdsong said HB 318 affects no Orange County Sheriff’s policies or resolutions, adopted by the Commission to date.

Commissioner Rich asked if there is some action she wanted the Board to take.

Susanna Birdsong said to the extent to which the Board is asked to define government official, or set parameters, she asked that the Board do so very narrowly.

Commissioner Rich asked if the information could be passed along to the Clerk to share with the Board.

Commissioner Dorosin said he would be interested in getting more information, and bringing a resolution forward echoing the sentiments of Susanna Birdsong’s comments. He said he would be willing to take on the authorship of such a resolution.

Commissioner Rich said that was her intention in asking the information to be shared with the Board. She said it is important to state the Board’s position on such matters.

Roger Leguillow said he is here to re-awaken the discussion of allowing food trucks within the area. He said food trucks are very popular locally for urban commercial areas. He said trucks are being allowed in the municipalities in Orange County, and it would be good to be ahead of the curve and to address this in a controlled manner.

**b. Matters on the Printed Agenda**

NONE

**3. <u>Announcements and Petitions by Board Members</u>**

Commissioner Price said thank you to InterFaith Council (IFC) for their annual open house, where the residents put on a welcoming event.

Commissioner Burroughs said the ABC Board had made good progress on the living wage and may be implementing this as early as January 2016.

Commissioner Burroughs said the Board of Health is very seriously considering services for men.

Commissioner Dorosin said there is a group of dedicated residents working on the living wage issue. He said this group goes out and educates the work sector to the extent that Orange County was recently certified as “providing the living wage”. He said this work is being funded independently and asked if there is anything Orange County can do to help support them financially or with in kind support. He said this group is having a fund raising event on Friday, November 6th from 5-7 p.m.

Commissioner Dorosin said the Women’s International League for Peace and Freedom is celebrating their 80th anniversary.

Commissioner Pelissier said there was a presentation on Energy Positive Schools at the North Carolina Association for County Commissioners (NCACC) Environmental Steering Committee, and asked the Manager to investigate these types of schools in light of the upcoming bond funding for schools.

Commissioner Rich referenced the living wage group mentioned by Commissioner Dorosin, and she encouraged them to apply for a grant during the budget season as well.

Commissioner Rich said she is a living wage certified business.

Commissioner Rich said the National Association of Counties (NACo) Technology Committee had a meeting today, and they are talking to a lobbyist about cyber security.

Commissioner Rich said last night there was a great presentation on organic composting at the SWAG meeting, and the Clerk has distributed this presentation to all Board of County Commissioners members.

Chair McKee said the Assemblies of Governments (AOG) Meeting has been cancelled. He said the Town of Hillsborough has a public hearing that night, and he consulted with both the Chapel Hill and Carrboro Mayors who suggested the meeting be postponed until a future date.

**4. <u>Proclamations/ Resolutions/ Special Presentations</u>**

NONE

**5. <u>Public Hearings</u>**

**a. <u>North Carolina Community Transportation Program Administrative and Capital Grant Applications FY 2017</u>**

The Board continued and considered closing the annual public hearing on the North Carolina Community Transportation Program (CTP) grant application by Orange Public Transportation (OPT) for FY 2017 and approving the grant application which includes adopting a resolution authorizing the Chair to sign an agreement with the North Carolina Department of Transportation (NCDOT).

Peter Murphy, Orange County Transportation Administrator, reviewed the following information:

**BACKGROUND:**

At the October 20, 2015 meeting, the Board of Commissioners opened the annual public hearing and continued the hearing to allow receipt of written comments by November 2, 2015 as indicated in the public hearing notice. As presented, each year the NCDOT Public Transportation Division accepts requests for administrative and capital needs for county-operated community transportation programs. OPT is eligible to make application for both administrative and capital funding. The current year FY 2016-approved application includes $166,765 in administrative funding and $232,286 in capital funding for replacement vehicles with total expenses equaling $399,051.

The **total CTP funding request for FY 2017 is $166,765** for community transportation administrative expenses and an additional **$316,782 for capital expenses**. This draft grant application is made for expenses totaling **$483,547**. Grant funds for administrative purposes will continue to be used to support overall transit systems management and operations and will continue to promote general ridership. Grant funds for capital items include the replacement of three (3) buses exceeding their useful life mileage thresholds in OPT's fleet. A public hearing (Attachment 3) is requested with the opportunity for public discussion and comment before the Board takes action on the resolution (Attachment 1). The acceptance of these grant funds requires compliance with the annual certifications and assurances, for which the signature pages are attached (Attachment 2). The attached signature pages are for the certifications and assurances for FY 2015 as an example. The FY 2017 certifications and assurances signature pages are very similar to those for FY 2015; however, the County has not yet received them from NCDOT. When received, they will be forwarded to the County Attorney and Chair for review and signatures.

**FINANCIAL IMPACT:**

The NCDOT CTP FY 2017 grant requires a 15% local match ($25,015) for administrative expenses and a 10% local match ($31,678) for capital expenses for a total of $56,693. As a comparison, the total CTP grant amount requested for FY 2016 was $166,765 for administrative expenses ($25,015 local match) and $232,286 for capital expenses ($23,229 local match) for a total of $48,244 local match, an increase of $84,496 in total expenses ($8,449 local match) from FY 2016 to FY 2017. The indicated local match amounts will be requested in the upcoming FY 2017 budget cycle and must be committed from Orange County's budget for the performance period of July 1, 2016, through June 30, 2017 (FY 2017), as indicated in the attached Local Share Certification for Funding form (Attachment 4). This will require Orange County to obligate funding in its next budget cycle for these expenses. A total of $56,693 would come from the County's general operating budget. This is not expanding any services only to maintain rural services; therefore no OCBRIP funds will be used.

He said this was an extended public hearing, and to date no further written comments have been received. He said at the Commissioners' places is a multi-year history sheet. He said the grant amount has been the same since 2012, with the exception of a $20,000 reduction in Orange County, due to the census.

A motion was made by Commissioner Pelissier, seconded by Commissioner Price to close the public hearing and to approve the Community Transportation Program Grant application for FY 2017 in the total amount of $483,547 with a local match total of $56,693 to be provided when necessary, approve and authorize the Chair to sign the Community Transportation Program Resolution and the Local Share Certification for Funding form (Attachments 1 and 4), and authorize the Chair and the County Attorney to review and sign the annual Certifications and Assurances document in Attachment 2.

VOTE: UNANIMOUS

**b. <u>Unified Development Ordinance Text Amendment – Recreational Land Uses – Extension of Public Hearing</u>**

The Board considered continuing the public hearing on Planning Director initiated Unified Development Ordinance (UDO) text amendments to revise existing regulations governing the development and use of recreational land uses and defer the hearing by adjourning it to December 7, 2015.

Michael Harvery, Orange County Planner III, reviewed the following information:

This item was presented at the September 8, 2015 Quarterly Public Hearing. As articulated during the hearing, staff and the County Attorney's office have determined existing definitions and classification methodology for recreation land uses are inappropriate. Staff proposed new definitions, as well as new development standards, for recreational land uses. The public hearing was adjourned to the November 5, 2015 BOCC meeting in order to receive the Planning Board recommendation.

This item was presented at the October 7, 2015 Planning Board meeting where members requested additional modifications and information on potential impacts of proposed regulations.

Michael Harvery said a revised abstract has been given to the Board and asked the Board of County Commissioners (BOCC) to extend and adjourn the hearing until the January 21, 2016 regular meeting.

Commissioner Dorosin asked if the item is still open for comments.

Michael Harvey said no further public comments are allowed, but written comments can be made to the Planning Board only.

John Roberts said there is more flexibility with legislative matters, as they are not quasi-judicial. He said if someone really wanted to comment on this until January, he would probably permit it; but technically there should be no more public comment allowed.

A motion was made by Commissioner Dorosin, seconded by Commissioner Burroughs to continue the public hearing until January 21, 2016 to allow the Planning Board to complete its review.

VOTE: UNANIMOUS

**c. <u>Zoning Atlas Amendment - Jacobs Glass Rezoning - Closure of Public Hearing and Action (No Additional Comments Accepted)</u>**

The Board received the Planning Board recommendation, considered closing the public hearing, and making a decision on an owner initiated request to rezone a split zoned 9.8 acre parcel of property in accordance with the provisions of Section 2.9.2 of the Unified Development Ordinance.

Michael Harvery reviewed the following background, and additional information provided via answers to questions from both the Planning Board and the BOCC.

**BACKGROUND**:

This item was presented at the September 8, 2015 Quarterly Public Hearing. During the public hearing the following questions/comments were made:

1. A BOCC member asked if the property owner will have to maintain land use buffers along NC 751 and adjacent residential property, both in Orange and Durham counties, if the property were rezoned.

*STAFF COMMENT:* The property owner will have to comply with established buffers, including:

*a.* The 100 foot perimeter Economic Development District (EDD) buffer required under Section 6.8.12 (C) (1) of the UDO along the southern property line (i.e. railroad right-of-way) and eastern property line (i.e. Durham County line), and

*b.* A 20 foot Type A land use buffer along NC 751 in accordance with Section 6.8.12 (C) (13) of the UDO.

The aforementioned land use buffers are the same for EDE-1 and EDE-2 zoned property.

2. A Planning Board member asked if approval of the rezoning petition grants development rights allowing for the expansion of the existing commercial operation.

*STAFF COMMENT:* As indicated during the public hearing, approval of the zoning atlas amendment does not eliminate the applicant's responsibility to apply for, and obtain, site plan approval and a Zoning Compliance Permit allowing for the expansion of the existing business as required by Section 2.5 of the UDO.

A motion was made by Commissioner Price, seconded by Commissioner Pelissier to close the public hearing and adopt the Statement of Consistency, contained within Attachment 5, and the Ordinance amending the Zoning Atlas, contained within Attachment 6, as recommended by the Planning Board and staff.

VOTE: UNANIMOUS

**d. <u>Zoning Atlas Amendment: Conditional Zoning – Master Plan Development Conditional Zoning District (MPD-CZ) Hart's Mill - Closure of Public Hearing and Action (No Additional Comments Accepted)</u>**

The Board considered receiving the Planning Board recommendation, closing the public hearing, and making a decision on a request to rezone a 112 acre parcel of property to Master Plan Development – Conditional Zoning (MPD-CZ) district in accordance with the provisions of Section 2.9.2 of the Unified Development Ordinance.

Michael Harvey reviewed the following information:

**BACKGROUND:**

This item was presented at the May 26, 2015 Quarterly Public Hearing. Excerpt of minutes from the hearing are contained in Attachment 2. Conditional Zoning District (CZD) Process: The process involves the approval of a rezoning petition and site plan allowing for the development of specific land use(s) on a parcel of property. Applications are processed in a legislative manner (i.e. does not require sworn testimony or evidence) and decisions are based on the BOCC's determination that the project is consistent with the purpose and intent of the Comprehensive Plan. The typical cadence for the review of a CZD application is:

• **First Action** – Planning staff schedules a Neighborhood Information Meeting (NIM).

**Staff Comment – DONE.** This meeting was held on April 8, 2015.

• **Second Action** – The BOCC and Planning Board review the application at 1 of 4 joint Quarterly Public Hearings.

**Staff Comment – DONE.** The public hearing was held on May 26, 2015.

• **Third Action** – The Planning Board makes a recommendation on the proposal.

**Staff Comment – DONE.** The Planning Board began their review of this item at its July 1, 2015 regular meeting and recommended approval of the project at its September 2, 2015 regular meeting.

• **Fourth Action** – The BOCC receives the Planning Board recommendation and makes a decision.

**Staff Comment –** The BOCC will receive the Planning Board recommendation at its November 5, 2015 regular meeting. As articulated at the public hearing, the proposed project is a village style development with approximately 34 dwelling units and involves the preservation of the majority of the property as vegetative open space and farm area (i.e. pasture and crop production). The residential portion of the project would occupy approximately 22 acres of the parcel with another 5 to 8 acres being used to support the proposed septic system. The remaining acreage would be preserved as farmland and dedicated open space.

During the public hearing the following comments were made:

1. There was general support for the project.

2. A BOCC member requested additional information on the ownership mechanism proposed by the applicant, expressing concern(s) over how residents will own their individual housing units and surrounding property.

STAFF COMMENT: Please refer to Attachment 3 of the abstract for the applicant's response.

3. A BOCC member asked for clarification on the imposition of conditions.

STAFF COMMENT: As detailed in the public hearing abstract, mutually agreed upon conditions can be imposed as part this process only if they address:

i. The compatibility of the proposed development with surrounding property,

ii. Proposed support facilities (i.e. roadways and access points, parking, pedestrian and vehicular circulation systems, screening and buffer areas, etc.) and/or

iii. All other matters the County may find appropriate or the petitioner may propose.

The applicant has verbally indicated they have accepted the recommended conditions. Further staff has been informed a letter signifying same will be presented at the November 5, 2015 regular BOCC meeting.

4. A BOCC member asked staff to clarify proposed and allowable density.

STAFF COMMENT: The property is located within the Rural Residential (R-1) general use zoning district and the Upper Eno Protected Watershed Protection Overlay District allowing for a density of 1 dwelling unit for every 40,000 sq. ft.(0.92 acres) of property.

The property is also located within the 20 Year Transition Area as denoted on the Future Land Use Map and is designated as being Urban on the Growth Management System Map indicating urban densities are permitted.

This could result in a total of 112 dwelling units being developed on the property based purely on the size of the parcel and not taking other factors into consideration (i.e. adequate soils for septic, road access, permitting process, presence of stream and other environmental features, etc.).

If approved the project would only allow for 1 dwelling unit for approximately every 3.2 acres of property and 34 dwelling units.

5. A Planning Board member asked if additional dwelling units could be added in the future.

STAFF COMMENT: The plan could be modified through the submittal and processing of a new Conditional Zoning District petition. This would require holding a new neighborhood information meeting and a public hearing to review the proposal.

6. A BOCC member asked if the applicant was being asked to extend road access to adjacent parcels.

STAFF COMMENT: It is not practical to extend the proposed roadway to the east due to the presence of streams and floodplain. There is no perceived benefit in requiring connection with adjoining subdivisions as this could create traffic concerns for adjacent neighborhoods.

7. A BOCC member asked the applicant to provide additional detail on the proposed 6 inch water line serving the project and if the line would be adequate to support water for both consumption and firefighting capabilities.

STAFF COMMENT: Please refer to Attachment 3 of the abstract for the applicant's response.

In consultation with the Fire Marshal and Orange County Emergency Services staff is recommending a condition requiring the final size of required waterlines to be determined at time of permitting with the review and approval of the Orange County Fire Marshal.

8. Several BOCC members asked for clarification on the proposed septic system for the project.

STAFF COMMENT: Please refer to Attachment 3 of the abstract for the applicant's response.

9. Planning staff indicated the applicant was asked to provide additional detail on proposed landscaping in and around individual residential structures.

STAFF COMMENT: Please refer to Attachment 3 of the abstract for the applicant's response.

At the July 1, 2015 Planning Board meeting the following additional information was requested:

1. A Planning Board member asked if there were any marketing materials available for the project and, if so, if copies could be provided.

STAFF COMMENT: Please refer to Attachment 5 of the abstract for the applicant's response.

2. Several Planning Board members asked if the applicant was going to allow for the creation of recreational amenities/land uses on the property. There was a concern expressed over requiring the applicant to come back through the process to amend the approved Conditional Zoning district to add a recreational amenity.

STAFF COMMENT: The site plan has been modified to include identified recreation areas.

The proposed development conditions contained in Attachment 9 were modified to spell out permitted recreational amenities for residents.

3. A Planning Board member asked for a more detailed breakdown of anticipated farm activities that would be allowed on the property.

STAFF COMMENT: Please refer to Attachment 5 of the abstract for the applicant's response.

4. The Planning Director asked the applicant to provide additional information on the promotion of "crime prevention through environmental design".

STAFF COMMENT: Please refer to Attachment 5 of the abstract for the applicant's response.

Michael Harvey reviewed the detailed information in the abstract and the Planning Board's recommendation.

Chair McKee asked if the letter of consistency is in attachment 7 or 8.

Michael Harvey said attachment 7 contains the letter of consistency approved by the Planning Board, under their signature. He said attachment 8 contains a letter of consistency for the BOCC to approve on its own.

Commissioner Pelissier referred to the list of the conditions on page 64 and asked if there are specific square footage requirements for meeting facilities.

Michael Harvey said the Applicant did not propose one and the planning staff did not feel it necessary to require one.

A motion was made by Commissioner Price, seconded by Commissioner Pelissier to close the public hearing, and to adopt the Statement of Consistency, contained within Attachment 8, and the Ordinance amending the Zoning Atlas, contained within Attachment 9, as recommended by the Planning Board and staff.

VOTE: UNANIMOUS

**e. <u>Unified Development Ordinance Text Amendment – Public Hearing Process Revisions - Closure of Public Hearing and Action (No Additional Comments Accepted)</u>**

The Board considered receiving the Planning Board recommendation, closing the public hearing, and making a decision on text amendments to the Unified Development Ordinance

(UDO) initiated by the Planning Director to revise the existing public hearing process for UDO-, Comprehensive Plan, and Zoning Atlas-related items.

Perdita Holtz, Orange County Planning Systems Coordinator, said they are here tonight to possibly adopt these text amendments.

Perdita Holtz made the following PowerPoint presentation:

**Public Hearing Process**
**Board of County Commissioners Meeting**
**November 5, 2015**
**Item 5-e**

**Recent History**

- Heard at September 8 Quarterly Public Hearing
- Purpose:
  - To revise the current public hearing process for Comprehensive Plan, Unified Development Ordinance, and Zoning Atlas Amendments
    - Allow the public to make comments at the end of the legislative process.
    - No longer require only written comments after the public hearing.
    - Do not require a quorum of Planning Board members in order to hold a quarterly public hearing (but members expected to attend the hearings).
    - Streamline and speed up the review/decision process when possible.
      - Have option to make a decision the night of the hearing on items with little controversy.

**Revisions Since Version Presented at Public Hearing**

- Retain newspaper legal advertisement for Special Use Permits
- Increase notice distance requirements from 500 feet to 1,000 feet for all projects that require mailed notices
  - Mail notices via first class mail rather than certified mail to keep costs and staff time lower

**Planning Board Input on Quorum Requirement**

- Majority of Planning Board members felt that, while the Planning Board should be expected to attend the quarterly public hearings, a quorum of Planning Board members should not be necessary in order to hold a public hearing
- Suggested addition of language to the Planning Board Policies and Procedures document to provide clarity for members regarding attendance

**Timeline Examples**

- Process for legislative items could be streamlined down to as little as 8 weeks from application deadlines if revised process is adopted
- Process for quasi-judicial items could be streamlined down to as little as 10 weeks from application deadlines
- Ability to have additional review time when warranted is retained in the proposed processes

**Planning Board Recommendation**

- Adopted Statement of Consistency (9-2 vote)
- Recommended approval of proposed amendment package (9-2 vote)

**Additional Information**

- If adopted, effective date would be January 1, 2016
    - Items proposed for the February 2016 quarterly public hearing would be first items processed under the revised procedure
- A review of the revised process will be conducted after 1 year
    - Report to BOCC in early 2017

**Recommendation**

- Receive the Planning Board's recommendation
- Close the public hearing
- Deliberate as necessary on the proposed amendments
- Decide accordingly and/or adopt the Statement of Consistency (Attachment 2) and the Ordinance and Planning Board Policies and Procedures (Attachment 3), as recommended by the Planning Board and staff.

Commissioner Rich asked who would bear the responsibility to act if someone needed to be removed from the Planning Board for non-attendance at quarterly public hearings.

Perdita Holtz said that authority would lie with the Board of County Commissioners.

John Roberts said any Chair, of any advisory board, might excuse anyone from a meeting for reasons such as for sickness.

Commissioner Dorosin extended his appreciation to Perdita Holtz for her work on this item.

Commissioner Dorosin said he wanted to highlight the streamlining of the process and noted that this will allow for more public engagement throughout the entire hearing process, which is consistent with the BOCC's stated values of transparency and public engagement.

Commissioner Price said if the Board of County Commissioners is unable to make a decision when the hearing is closed, the Board used to be able to refer it back to the Planning Board. She asked if this would still be possible.

Perdita Holtz said with legislative items the Board could do so, but a quasi judicial item would need to be brought back in a public hearing which would be have to be extended.

Commissioner Price also thanked Perdita Holtz for her work on this issue.

A motion was made by Commissioner Price, seconded Commissioner Dorosin to close the public hearing and adopt the Statement of Consistency, contained within Attachment 2, and the Ordinance amending the UDO and Planning Board Policies and Procedures, contained within Attachment 3, as recommended by the Planning Board and staff.

VOTE: UNANIMOUS

**6. Consent Agenda**

- Removal of Any Items from Consent Agenda
  Item 6-b by Chair McKee

- Approval of Remaining Consent Agenda

A motion was made by Commissioner Price, seconded by Commissioner Rich to approve the remaining items on the Consent Agenda.

VOTE: UNANIMOUS

- Discussion and Approval of the Items Removed from the Consent Agenda

**b. Motor Vehicle Property Tax Releases/Refunds**

The Board considered adopting a resolution to release motor vehicle property tax values for four (4) taxpayers with a total of six (6) bills that will result in a net reduction of revenue of $16,083.54, in accordance with the NCGS.

Chair McKee asked if the validity of the numbers in the item had been verified.

Dwane Brinson, Orange County Tax Administrator, said this is the market value for these vehicles.

A motion was made by Commissioner Price, seconded by Commissioner Burroughs to approve the adoption of a resolution, which is incorporated by reference, to release motor vehicle property tax values for four (4) taxpayers with a total of six (6) bills that will result in a net reduction of revenue of $16,083.54, in accordance with the NCGS.

VOTE: UNANIMOUS

**a. Minutes**

The Board approved the minutes from September 29, October 1, and October 6, 2015 as submitted by the Clerk to the Board.

**c. Property Tax Releases/Refunds**

The Board adopted a resolution, which is incorporated by reference, to release property tax values for four (4) taxpayers with a total of nine (9) bills that will result in a net reduction of revenue of $10,373.16, in accordance with North Carolina General Statute 105-381.

**d. Applications for Property Tax Exemption/Exclusion**

The Board approved three (3) untimely applications for exemption/exclusion from ad valorem taxation for three (3) bills for the 2015 tax year.

**e. Unified Development Ordinance Amendment Outline and Schedule – Engineering Standards for Development**

The Board approved process components and schedule for an upcoming government-initiated amendment to the Unified Development Ordinance (UDO) incorporating engineering standards for property development.

**7. Regular Agenda**

**a. Bicycle Safety Resolution and Next Steps**

The Board considered approving a resolution supporting public and private efforts to increase safety awareness between motorists and bicyclists, roadway safety improvements for bicyclists, and authorizing next steps.

Abigaile Pittman, Orange County Planning and Inspections, said staff was directed to bring this item back to the Board of County Commissioners this fall. She reviewed the recommendations included in the abstract, as well as the proposed resolution. She noted that the recommendation regarding a task force is not supported by the County Manager's Office.

Bonnie Hammersley said she wanted to elaborate about not recommending a task force. She said she had conversations with the Sheriff, and the County has accomplished most of that over which the County has jurisdiction. She said setting up a County task force

without jurisdiction will lead to failure. She said the State Patrol does the enforcement, and the Department of Transportation (DOT) is responsible for County roads.

Commissioner Pelissier referred to page 2, saying a lot of it refers to what DOT does. She asked if requests have been made to DOT for any of these improvements.

Bonnie Hammersley said these items have been discussed with DOT at past meetings.

Abigaile Pittman said DOT is aware of this report and the bicycle safety group has met with both the DOT and the Sheriff's office. She said DOT is willing to review some of these improvements but it has to be for more than just bicycles.

Commissioner Rich referred to page 2, item number 3. She asked if there are current enforcement efforts that are seeking to be enhanced.

Abigaile Pittman said the County does not have such authority and these efforts would fall under the Sheriff's office.

Bonnie Hammersley said the Sheriff feels that he does not have as much authority as the Highway Patrol, regarding citations.

Commissioner Rich asked if the enhancements would be more of an educational campaign.

Abigaile Pittman said the County can forward this resolution to the DOT and the Sheriff's office in order to partner with bicycle education and to add information to their present quarterly meetings, and also add pertinent information to their website about bicycle safety.

Commissioner Rich said all bicycle riders must follow proper road safety.

Commissioner Dorosin said enforcement efforts are different than raising public awareness. He said the Sheriff can enforce traffic safety issues and the Sheriff's office knows where the more critical spots are.

Commissioner Price asked if there could be a sub-committee of the Orange Unified Transportation Board (OUTBoard), which could meet with residents to continue the conversation and bring information back to the BOCC.

John Roberts said yes.

Commissioner Price asked if a staff person would have to be tasked to this group or could just the sub-committee meet.

Bonnie Hammersley said this is not about staff. She said one option would be a sub-committee that has staff available to provide support but the County leading a task force over which it does not authority would be a challenge.

Bonnie Hammersley said she could take this information to the Chair of the OUTBoard.

**PUBLIC COMMENT:**

Paul Speight said he is the Deputy Chief of the Orange Grove Fire Departments. He said about six weeks ago he and the Fire Chief were responding to an EMS call. On the way, the Chief passed a bicyclist and Paul Speight was following about 500 feet behind. He said as he approached the bicyclist, the cyclist made an abrupt turn, which caused Paul Speight to almost turn over a fire truck. He said bicycles rarely stop at intersections, and many times bicyclists do not move out of the way when they are running trucks out of their station. He said they are asking cyclists to give EMS the right of way and to follow the laws.

Norma White said she lives in Little River Township and is speaking tonight on behalf of Schley Grange 710. She said the members are strong advocates for rural road safety. She said, at the request of Schley Grange, the North Carolina Grange included a bicycle resolution on their legislative agenda. She asked if Orange County could adopt a similar resolution. She read the resolution and provided it to the Clerk to the Board.

Heidi Perry said she rides in Orange County and has done so for 30 years while obeying the laws. She said she would like to assist the fire department in finding cyclists that do not move out of the way for EMS. She is a bicycle advocate appointed to the OUTBoard, is a

founding member of the Carrboro Bicycle Coalition, and a cycling advocate for over 30 years. She is here just representing herself tonight. She said a year ago the Board of County Commissioners tasked the OUTBoard to review this issue and the Board responded with a report outlining how much time it would take to implement their recommendations. She said she is pleased to see this resolution could be easily passed and then put on a shelf. She requested to add the following amendments to the resolution:

f. To have a specific action plan that could address 10 goals to address cycle safety and pedestrian safety.
g. Budget line item for bicycle safety for education.

Heidi Perry said she has rules of the road translated into several languages, which she is happy to share with the Highway Patrol. She said there is a lot of room to work on safety through education.

John Rees said he is an Orange County resident and today he represents the Carolina Tar Heel Bicycle Club, which promotes the use of cycling and recreational cycling. He said funding is important, and he reiterated that the road rules are for bicyclists too. He said the club would like to work with Orange County on education. He said he is a cyclist himself and he and the club follow the rules of the road. He said they are law-abiding residents and they like to frequent local businesses in the County as they ride in Orange County.

Bonnie Hauser is speaking on behalf of Orange County Voice which has been working on bike safety for years. She said Orange County Voice does not see education as the issue but rather a small number of cyclists and motorists that are causing the problems, in addition to roads that are not built for sharing. She said there are no consequences for cyclists that break the rules of the roads. She said Orange County Voice supports the resolution from the Grange. She asked the Board to consider a similar resolution on Orange County's legislative agenda.

Bonnie Hauser said off road cycling options are needed, such as the American Tobacco Trail in Durham, and the Greenway in Wake County. She recommended the convening of a task force to plan off road bikeways in Orange County in partnership with the Towns. She said the task force must include residents from the rural communities.

Bryant Dodson said education does not seem to help a lot. He said he lives out near Maple View Farms, which is a destination place. He said he has been working on this issue for a long time and finds many cyclists do follow the rules. He said the ones that do not follow the rules cause the real problems. He said he has been advocating for bicycle licenses and suggested the County do this instead of the State. He said the only way to penalize cyclists is to give them consequences.

Kim Dodson said there is a huge need on this issue in their community. She said when a vehicular law is broken people call 911 but if a bike law is broken there is no one to call. She said there is no form of identification. She said tickets are given out to bike riders on campus, but in the rural community this protection does not exist. She asked if the BOCC could please help in the Orange Grove community.

Stanley Ray Hoffman lives in Chapel Hill and has been a cyclist for over 50 years. He said he uses the highways and roads. He said he appreciated the discussion but suggested if the topic could be seen from his perspective it would be different. He said motorists are the dangerous ones and laws should be enforced as they apply to both motorists and cyclists. He said he is happy to see a Sheriff's car anytime. He said cyclists are traffic on the road and most obey the law. He said they want law enforcement to enforce the law anywhere and anytime.

Commissioner Price said she wanted to re-visit the idea of a sub-committee and is open to suggestions.

John Roberts said the BOCC could direct the OUTBoard to create a sub-committee without staff support.

Commissioner Rich said it sounds like there is already a group from the OUTBoard that are discussing this topic and asked if Heidi Perry could confirm.

Heidi Perry said when the report was put together in June, a sub-committee of the OUTBoard and residents was formed. She said this is doable again.

Commissioner Rich said this should be a continuing committee to help achieve some of their proposed goals and to create an action plan.

Heidi Perry said it may be helpful to have some data to support generalizations and suggested bringing in Highway Patrol.

Commissioner Rich said the OUTBoard already has a sub-committee and to re-convene it. She said it is important to have some sort of funding mechanism for this issue and suggested that the subcommittee bring back a recommendation.

Commissioner Dorosin said a subcommittee of the OUTBoard would be just members of the OUTBoard and he suggested adding more members of the community.

Commissioner Dorosin referred to the Manager not recommending a task force and said he believes there are things the Board can do, including a more specific resolution. He said the specific items on the abstract should be put in the resolution. He said having some designated bike trails is something the County could do, providing other places for people to ride. He said more funding could be put into the roads, more than just a sign. He said law enforcement could monitor certain trouble areas. He said there could be a more comprehensive approach and to bring the different partners together through a sub-committee or committee.

Commissioner Price said the Board charged the OUTBoard to look at this issue last year, and she seeks to continue the conversation. She said the subcommittee could include community members.

Bonnie Hammersley said when the petition came last year the issue arose that the OUTBoard cannot appoint outside members, but the BOCC can appoint other citizens outside of the group. She said the BOCC could create a charge to help the task force to succeed, staying within the areas where the County has authority.

Commissioner Rich said citizens came to the OUTBoard's previous committee meetings.

Bonnie Hammersley said those citizens were not appointed to the committee, but rather the citizens just attended.

John Roberts said one of the charges for the OUTBoard is to solicit information from the public, and that is acceptable without formal appointment.

Commissioner Pelissier said some boards hold community forums for specific issues and encouraged the OUTBoard to continue this discussion. She said there is a lot of community discussion about enforcement. She said she would urge OUTBoard to look not only at enforcement, with the exception of legislative issues.

John Roberts asked if the BOCC is seeking for the legislature to apply laws to bicyclists.

Commissioner Pelissier said not necessarily. She said she is interested in hearing what the public would suggest the BOCC consider as a legislative issue.

John Roberts said the North Carolina General Statute (NCGS) does include bicycles and they are subject to same laws as motorists, where applicable.

Commissioner Pelissier said the State had a concerted effort regarding pedestrian safety and maybe the same can be done with bicyclists.

Commissioner Pelissier said there are long-term plans for bicycle lanes in the rural areas of the County, but they are far out and are expensive. She said the State has cut funding for pedestrian and bike projects this year, and bike lanes are too costly for the County to consider.

Commissioner Burroughs suggested looking at the Grange resolution, at a minimum. She asked if cyclists can be penalized in the same way as drivers of vehicles.

John Roberts said yes, the statute is very clear that the laws applicable to drivers apply equally to cyclists.

Commissioner Dorosin asked if there is an advantage of a subcommittee over a task force.

Bonnie Hammersley said from her perspective a task force would require appointments from the Board of County Commissioners and a sub committee can have community input and meetings without the formal process.

Commissioner Price said the task force is more formal and the sub-committee could continue what it has been doing. She would like the group to do the work and have community participation.

Commissioner Rich said this resolution is incomplete and asked if there are next steps.

Chair McKee said the item could be sent back to staff and create a task force or sub-committee.

Chair McKee said this item is not ready for prime time and he would prefer deferment. He said Commissioner Pelissier said many of the Board members have served on transportation groups and added that many bike projects do not get funded. He said his main concern is not for individual riders, but rather the groups of riders of 25-50 or more. He said the issue of identifying cyclists is a real problem and he believes the conversation must include the topic of licensing bikes on the road in order to identify individuals.

Bonnie Hammersley said she would suggest that the Board send it back to staff for a recommendation, which staff will bring back after the holiday break. She said she would meet with the OUTBoard Chair and also the Sheriff to ask him to respond to the Board of County Commissioners at a public meeting.

Commissioner Pelissier said a resolution can come back to the Board but this may be an on-going issue. She said all of the advisory boards do a work plan each year and to put these items in the OUTBoard work plan.

Commissioner Price said the community just wanted to be heard on this issue. She said she was required to have a bike license as a child so it is not a foreign idea.

Commissioner Rich suggested talking to the County's Communication Department to see what would be the best way to bring this education forward to County visitors.

Chair McKee said there was an issue with deer hunting years ago and it came down to printing the laws and placing them everywhere in the County. He said making the laws readily available is one tool to address this issue.

Commissioner Rich said the laws could be placed on a bike map of Orange County, on the web or in hard copy.

A motion was made by Commissioner Rich, seconded by Commissioner Pelissier to refer the resolution back to the Manager to be fleshed out, and for the Manager do all she said and the Board will revisit this in January or February 2016.

VOTE: UNANIMOUS

## 8. Reports

### a. Community Giving Fund Update

The Board received an update on the Orange County Community Giving fund, its evolution to date, and its anticipated future developments and provide comments and direction as appropriate.

Bob Marotto, Orange County Animal Services Director, reviewed the following information:

**BACKGROUND:**

In 2013, the Orange County Community Giving Fund was created as a mechanism for residents and others to make donations to the County for specific public purposes. The fund is County-wide and all departments have an equal opportunity to participate in this purpose.

The creation of the fund was partially in response to feedback that there may be hesitations on the part of the public to donate to the County's general fund. Of special concern was that people did not believe that they are able to decide where and how donated money is used. Additionally, the ability to roll funds over from one year to another was challenging and a secondary fetter on purposive giving.

The Community Giving Fund, in contrast, contains a structure that guarantees donations will only be used for the specified purpose for which they are made. It also has an advantage of rolling funds over from year to year for specific projects and programs that may be long-term and unable to be completed in a shorter time frame. All donations to the fund are tax-exempt.

The fund has continued to grow annually, in both scope and size, with several changes being made along the way as the County has become more familiar with its opportunities and how to most effectively fit them to its needs. One of these has been introducing the ability to refresh the menu of giving opportunities on a semi-annual basis as needs change and grow within departments or on the County level. Another has been the introduction of the fund to the County's Combined Giving Campaign, a change that first took place in 2014 and will continue for the upcoming 2015 drive.

Most recently the County has begun to connect larger initiatives to the potential provided by the Community Giving Fund. Illustrations include the Family Success Alliance, My Brother's Keeper, and the Veteran's Memorial. In the latter case, efforts were underway to find a suitable donation mechanism for the memorial; and ultimately, funds were transferred from another source into the Community Giving Fund to jumpstart the project.

Currently, the managing committee for the Community Giving Fund is considering extending outreach about the fund to civic groups active in the County. It is anticipated that this would take place in the form of in-person presentations to a broad range of active civic organizations in Orange County. In addition to its form and content, thought is being given to the timing of such an outreach initiative.

**RECOMMENDATION(S):** The Manager recommended that the BOCC receive the update from staff on the Orange County Community Giving Fund and provide comments and direction as appropriate.

Bob Marotto made the following PowerPoint presentation:

**<u>Community Giving Fund</u>**
**<u>Where We Are, Where We're Going</u>**

**<u>History</u>**

- Started in 2013
- A young endeavor still
- Has grown and continues to grow in potential
  - i.e. Animal Services dog play yard
- Managed by the Triangle Community Foundation, a 501(c)3 organization
  - They're able to handle various types of donations
  - They receive a small percentage for their services

**<u>Stats</u>**

- Since 2013, $71,000 has been raised
- Growing annually
  - 2013 ~ $9,300
  - 2014 ~ $32,600
  - 2015 ~ $30,000 (thus far)
- In 2014, it was incorporated into Combined Giving Campaign
  - County employees gave $7,000 that year

**Scope**

- Creative funding opportunities
  - Stocks, Real Property, etc
- Earmarked funds
- Rolls over annually
- Relieves fear of donating to general fund

**Opportunities**

- County-wide Initiatives
  - Combined Giving Campaign
  - Veteran's Memorial
  - Family Success Alliance
  - My Brother's Keeper
- Presentations Underway with Civic Groups
  - Will talk about opportunities to do more in the County and dedicated giving to public pursuits

Commissioner Burroughs referred to the unallocated donations, and asked if Bob Marotto could expand on these $3000.

Bob Marotto said these are people who have given gifts that were not earmarked for a specific purpose.

Commissioner Burroughs asked if there is a process to determine where these unallocated funds go.

Bob Marotto said the fund is evolving, and people are starting to recognize that there are specific line items. He said the Manager could make the decision about the usage of unallocated funds.

Commissioner Dorosin asked if there are ways that this fund has been publicized to residents.

Bob Marotto said the fund reached out to advisory boards and commissions providing a portfolio of giving options, used the website, and talked about doing a systematic outreach to civic organizations.

Bonnie Hammersley said it has been a fairly passive process to date and talking with civic groups is more about education not fund raising.

**9. County Manager's Report**

Bonnie Hammersley reviewed the items for next week's work session:

**Projected November 10, 2015 Work Session Topics**

- Eligibility Changes for Food and Nutrition Benefit Recipients
- Space Study Update
- Affordable Housing Plan Update
- Annual Water Resources Update

Bonnie Hammersley said the NCACC will be doing a presentation to the BOCC on the state statute for school funding on December 7th. She said any specific questions could be forwarded to her by December 3rd.

**10. <u>County Attorney's Report</u>**

NONE

**11. <u>Appointments</u>**

**a. <u>Hillsborough Board of Adjustment – Appointment</u>**

The Board considered making an appointment to the Hillsborough Board of Adjustment.

A motion was made by Commissioner Price, seconded by Commissioner Pelissier to appoint Jamie Tomosunas to the Hillsborough Board of Adjustment to a partial term (position #1) "ETJ County-Alternate" expiring 06/30/2017.

VOTE: UNANIMOUS

**b. <u>Historic Preservation Commission – Appointments</u>**

The Board considered making appointments to the Historic Preservation Commission.

Commissioner Price said there are two different interpretations of the statute and asked if the applicant must to live in the County and the Town of Hillsborough, or only the County.

John Roberts said he interpreted these statutes to mean that whomever is appointed must be a resident of the County's territorial jurisdiction (anywhere within the County lines), which includes towns. Conversely, a town's Historic Preservation Commission (HPC) cannot include county residents except those from an ETJ area.

These are the applicable statutes:

**§ 160A-400.2. Exercise of powers by counties as well as cities.**

The term "municipality" or "municipal" as used in G.S. 160A-400.1 through 160A-400.14 shall be deemed to include the governing board or legislative board of a county, to the end that counties may exercise the same powers as cities with respect to the establishment of historic districts and designation of landmarks

**§ 160A-400.7. Historic Preservation Commission.**

Before it may designate one or more landmarks or historic districts, a municipality shall establish or designate a historic preservation commission. The municipal governing board shall determine the number of the members of the commission, which shall be at least three, and the length of their terms, which shall be no greater than four years. A majority of the members of such a commission shall have demonstrated special interest, experience, or education in history, architecture, archaeology, or related fields. **<u>All the members shall reside within the territorial jurisdiction of the municipality as established pursuant to G.S. 160A-360</u>**. The commission may appoint advisory bodies and committees as appropriate.

**§ 160A-360. Territorial jurisdiction.**

(a) All of the powers granted by this Article may be exercised by any city within its corporate limits. In addition, any city may exercise these powers within a defined area extending not more than one mile beyond its limits.

**§ 160A-400.8. Powers of the Historic Preservation Commission.**

A preservation commission established pursuant to this Part may, within the **zoning jurisdiction** of the municipality:

A motion was made by Commissioner Price, seconded by Commissioner Dorosin to appoint the following to the HPC:

- Jaime Grant to a first full term (Position #1) At-Large expiring 03/31/2018.
- Thomas Loter to a partial term (Position #2) At-Large expiring 06/30/2017.
- Kolby Herndon to (Position #3) At-Large for expiring 03/30/2018.

VOTE: UNANIMOUS

**c. Human Relations Commission – Appointments**

The Board considered making an appointment to the Human Relations Commission (HRC).

A motion was made by Commissioner Pelissier, seconded by Commissioner Price to appoint the following to the HRC:

- Colin O'Banion to a partial term (Position #2) "Town of Carrboro" representative expiring 06/30/2017.

VOTE: UNANIMOUS

A motion was made by Commissioner Dorosin, seconded by Commissioner Price to appoint Desiree Rockett to position #15-At-Large position- expiring June 30, 2017.

VOTE: UNANIMOUS

**d. Mebane Planning Board – Appointment**

The Board considered making an appointment to the Mebane Planning Board.

A motion was made by Commissioner Price, seconded by Commissioner Burroughs to appoint the following to the Mebane Planning Board:

- Thomas Fenske **for an additional term** (Position #1) "Extraterritorial Jurisdiction" for expiring 06/30/2019.

VOTE: UNANIMOUS

**e. OPC Oversight Board – Appointments**

The Board considered making appointments to the OPC Oversight Board.

A motion was made by Commissioner Price, seconded by Commissioner Pelissier to appoint the following to the OPC Oversight Board:

- Mary Cay Corr to a second full term (Position #1) BOCC Designee expiring 06/30/2018.
- Jesse Brunson to a first full term (Position #2) Consumer or Family Member representative expiring 06/30/2018.

VOTE: UNANIMOUS

**f. Orange County Planning Board – Appointments**

The Board considered making appointments to the Orange County Planning Board.

A motion was made by Commissioner Dorosin, seconded by Commissioner Price to appoint Patricia Roberts to a first full term (position #3) "Cheeks Township" expiring 03/31/2018.

VOTE: UNANIMOUS

**12. Board Comments**

Commissioner Rich said she heard a discussion on WCHL with the Department on Aging. She said it was good conversation about the diversity at the County senior centers.

Commissioner Pelissier attended the Nursing Home Advisory Committee meeting, and she was very impressed with this board and its members' dedication.

Commissioner Dorosin said he had no comments.

Commissioner Burroughs said she had no comments.

Commissioner Price said she visited the Rogers Road Community Center Halloween event and it was nice to see the community center being used by so many groups of people.

Chair McKee attended the press conference at the Lincoln Center about the achievement gap and has been invited to speak to the Southern branch of the Orange County National Association for the Advancement of Colored People (NAACP) on Saturday, November 7th.

**13. Information Items**

- October 20, 2015 BOCC Meeting Follow-up Actions List
- Tax Collector's Report – Numerical Analysis
- Tax Collector's Report – Measure of Enforced Collections
- Tax Assessor's Report – Releases/Refunds under $100
- BOCC Chair Letter Regarding Petitions from October 20, 2015 Regular Meeting

**14. Closed Session**

A motion was made by Commissioner Burroughs, seconded by Commissioner Rich to go into closed session at 9:41 p.m. for the purpose of:

"To discuss the County's position and to instruct the County Manager and County Attorney on the negotiating position regarding the terms of a contract to purchase real property," NCGS § 143-318.11(a)(5).

VOTE: UNANIMOUS

**RECONVENE INTO REGULAR SESSION**

A motion was made by Commissioner Price, seconded by Commissioner Burroughs to reconvene into regular session at 10:20 p.m.

VOTE: UNANIMOUS

**15. <u>Adjournment</u>**

A motion was made by Commissioner Burroughs, seconded by Commissioner Price to adjourn the meeting at 10:20 p.m.

VOTE: UNANIMOUS

Earl McKee, Chair

Donna Baker
Clerk to the Board

**Attachment 2**

**DRAFT** **MINUTES**
**ORANGE COUNTY BOARD OF COMMISSIONERS**
**WORK SESSION**
**November 10, 2015**
**7:00 p.m.**

The Orange County Board of Commissioners met for a work session on Tuesday, November 10, 2015 at 7:00 p.m. at the Southern Human Services Center in Chapel Hill, N.C.

**COUNTY COMMISSIONERS PRESENT**: Chair McKee and Commissioners Mia Burroughs, Mark Dorosin, Barry Jacobs, Bernadette Pelissier, Renee Price and Penny Rich
**COUNTY COMMISSIONERS ABSENT**:
**COUNTY ATTORNEYS PRESENT**: John Roberts
**COUNTY STAFF PRESENT**: County Manager Bonnie Hammersley, Assistant County Manager Travis Myren and Clerk to the Board Donna Baker (All other staff members will be identified appropriately below)

Chair McKee called the meeting to order at 7:02 p.m.

**1. Eligibility Changes for Food and Nutrition Benefit Recipients**

Nancy Coston, Orange County Department of Social Services (DSS) Director, said they are here to give the Board of County Commissioners (BOCC) an update on the changes to the Food Nutrition Benefit Eligibility.

Nancy Coston reviewed the following information:

The Food and Nutrition Services program has included certain work registration requirements. The most restrictive work requirements apply to the Able Bodied Adults Without Dependents (ABAWD). Since 2008 and after the economic downturn, North Carolina has been operating under a federal ABAWD waiver of the work requirements. Because the unemployment rate has improved, some counties, including Orange, will no longer be able to operate under the waiver effective January 1, 2016.

The people who are subject to these work requirements are between 18 and 49 years old, do not live in a households with minors and have not been determined to be disabled. There are also some temporary exceptions such as medical hardship. For those who are subject to the work requirements, these individuals must be employed or in approved employment and training activities for an average of at least 20 hours per week to be eligible to receive benefits for the month. Individuals are allowed to receive benefits for only 3 months during 36 months without meeting the work requirements. Initial data indicate over 1,500 individuals in Orange County who receive FNS benefits are subject to the ABAWD requirement. It appears that about half have some earned income, but the current records do not reflect the participants' hours worked or hours attending qualifying employment activities.

There are many tasks that must be completed by the Department of Social Services (DSS) staff related to these new requirements. The first is to assess the 1,500 clients and to identify those not already meeting these requirements. Other tasks involve developing procedures for tracking all of these activities and training staff on the new NCFAST processes related to the new eligibility requirements. Not only will this require considerable effort between now and January, but the tracking will also be needed each month for all of the impacted clients.

Lindsey Shewmaker, Human Services Manager, said an ABAWD is mentally and physically able to work. She said ABAWDs have to work an average of 20 hours a week, including self-employment, volunteer work, and participation in work programs. She said if there are ABAWDs that do not meet these requirements they can receive 3 months' worth of Food and Nutrition benefits, but then must wait 36 months, unless they are exempted. She said the main reasons for being exempt are having a child in the home, receiving unemployment benefits, and being physically or mentally unfit for employment.

Lindsey Shewmaker said a report from the State listed about 860 Orange County ABAWD clients that currently lack income, each of whom will need to be reviewed locally to see if any exemptions exist. She said a second report is expected from the State in December, which will include the rest of the ABAWDs that do have some income, but no recorded work hours.

Commissioner Dorosin asked if the total number of ABAWDs is 1,500 or 2,300.

Lindsey Shewmaker said 1,500 is the initial estimate from the State, but this number may go up after the second report. She said DSS staff is currently seeking to help clients find ways to keep their benefits.

Nancy Coston said DSS is not required to provide employment and training activities for these participants, but the agency is planning to expand the voluntary program as an avenue for them to meet the requirements. She said many of the activities planned for the expansion at Hillsborough Commons should meet the requirements, and the agency is also looking at expanding work experience at both County agencies and businesses in the community. She said DSS will also work with Durham Technical Community College to identify courses that are appropriate for these participants. She said, additionally, the agency would be working on transportation and other support services needed to help the participants to continue receiving benefits, while seeking additional employment skills.

Nancy Coston said this law goes into effect January 1st but clients would not lose their benefits until April 1st; thus, DSS needs to review their clients that fall in this category during this time frame to try and find them ways not to lose their benefits, and secure proper documentation. She said DSS needs to reach out and touch 1,500 people in 30 days and then have options for those individuals that do not work 20 hours for week. She said the agency cannot use for profit sites for work experience, but they can volunteer at non-profits and they can work at public entities.

Commissioner Dorosin asked if the State has specific criteria to determine the list of 1,500 clients.

Nancy Coston said the first group the State ran are those who are able bodied but showing no earned income. She said this first list has no wages and risk losing these benefits. She said the next group were those who had some wages, but the number of hours being worked is unknown, so they have to find out that information themselves, and there is an estimate that there are 1,500 in Orange County that have this need.

Commissioner Dorosin asked if the number of people receiving food benefits in Orange County is known, and who the State would have taken out of this number already.

Lindsey Shewmaker said about 6,000 people receive benefits, and the State has backed out all the cases where there are children in the home, or there is a documented disability.

Commissioner Dorosin asked if there could be clarification regarding the for-profit programs.

Nancy Coston said she is unclear about this aspect of the program and criteria. She said she is not sure of what the final rule will be when all is said and done.

Commissioner Pelissier asked if individuals have been notified yet.

Lindsey Shewmaker said last week the State sent out notices to the people the State identified as potentially at risk of losing benefits, telling them about the new work requirements.

Commissioner Pelissier asked if there is a way of addressing the monetary costs of taking educational courses.

Nancy Coston said the voluntary training program that is run by DSS could help with tuition costs, as long as it is tied with getting a job. She said there are some processes that DSS is trying to sort through with non-profits and Durham Tech, and may be able to find funding to match federal funding through the school.

Commissioner Pelissier asked if there is a system in place to know which jobs individuals could get through certain training.

Nancy Coston said DSS has some information about jobs in Orange County, but are trying to balance clients' skill level with jobs. She said these clients are going to have to be triaged for possible jobs.

Commissioner Rich referred to the clients who may be working for themselves and asked if a total number of these people are known. She also asked if this information is tracked in any way.

Lindsey Shewmaker said some of the population is self-employed, and certain types of verification would be needed for documentation purposes.

Commissioner Rich said she sees complications with self-employed persons.

Lindsey Shewmaker said this will be a challenge for the Department and the clients.

Nancy Coston said DSS is already working with these clients, as work and earnings must be documented to receive many types of benefits.

Commissioner Jacobs asked if there are any thoughts regarding seasonal workers.

Lindsey Shewmaker said in a 36-month period, there are 3 countable months where one can be without employment. She said one can regain eligibility by working 80 hours in a consecutive 30 day period. She said a seasonal worker would likely regain eligibility during a time of employment and then receives an additional consecutive 3 months to be without work.

Nancy Coston said after the second 3-month period, recipients would then have to work or meet every single requirement.

Lindsey Shewmaker said one's eligibility could only be regained once.

Commissioner Jacobs said he spoke with one of the owners of Sports Endeavors, where hundreds of seasonal workers are needed.

Nancy Coston said having an employment history makes it easier to find jobs. She said this is the population that also does not receive health insurance and food and nutrition is about their only benefit.

Commissioner Price asked if many of these clients are transient, and how they are reached.

Nancy Coston said a mailing will go out, an informational phone line will be set up, and non-profits will be contacted to help spread the word about an information session. She said some clients will be missed, and they may not find out about the change until the benefits run out or they come in for a review.

Commissioner Jacobs asked if the mailings will come in a non-descript envelope, and if so, suggested maybe a stamp could be added to make it known to the recipient that the mailing is important.

Nancy Coston said DSS is considering using some temporary staff to help reach out to clients, and hopefully some of this staff can be from the population they are trying to serve.

Commissioner Dorosin said County communication staff should do outreach, publicize what is going, and the super human efforts that DSS wants to use to mitigate this process. He also suggested any ideas should be shared with the other Commissioners at the state and national levels. He asked if the weekly benefits are a specific amount, and if so, could the County create some supplemental emergency assistance to help these clients.

Lindsey Shewmaker said the benefits are about $180 a month.

Commissioner Dorosin said Orange County is a rich county, and if the list is whittled down to 200 or so people the County should be able to assist or subsidize them. He suggested the possibility of staff coming back to the Board with what it would cost to provide help for 3 to 6 months.

Bonnie Hammersley said she asked Nancy Coston to present this item to make the Board aware of this situation. She said the situation will continue to be monitored, and the Board will remain fully informed of both the positive and the negative.

Commissioner Dorosin said this need could be a line item in the Community Giving fund.

Commissioner Jacobs asked if this relates to the Work First program.

Nancy Coston said those people in the Work First program are not subject to these changes. She said Work First has its own requirements. She said keeping up with the work hours of all clients is a big distraction from doing the more important work of helping clients.

Commissioner Jacobs mentioned that several employers hire Work First participants. He said it would be beneficial to recruit the private sector, so the burden of support does not always fall on the government.

Nancy Coston said there have been some wonderful relationships with the private sector, and she agrees this should continue. She said there have also been some missed opportunities with funds coming into Orange County in these areas. She said it is crucial to pursue every avenue that may help the clients.

Commissioner Jacobs asked if the Orange County Economic Development office has been approached as a partner.

Nancy Coston said this Department has been helpful thus far, but the relationship can deepen further.

Commissioner Price said she is still concerned about this program, and while DSS is doing their best it seems like a band-aid effect. She said the client may have a job and some food but may not have a place to stay or clothes on their back. She said this does not address breaking the cycle.

Nancy Coston said the group of 1,500 clients are going to have very varied demographics, with some facing homelessness and others transportation or employment needs. She said triaging the clients and creating unique plans will be critical.

Chair McKee asked if there is a timeline to move through this evaluation process.

Nancy Coston said this process will take time, and once her staff reviews the initial list many people will be taken off. She said the total number of clients that will need to be assessed is not yet known, but there will be some group meetings with these clients as well as some clients that can complete some self-assessments. She said this whole process will be a huge task, and clients will be asked to help document their current work status.

Chair McKee suggested that the Board of County Commissioners (BOCC) is interested in not letting clients fall through the cracks. He read the financial impact statement on the abstract and urged DSS not to wait until the middle of December to come back, but rather to let the BOCC know the need as soon as possible.

Bonnie Hammersley said the situation would be monitored, and a budget amendment would be presented to the Board if necessary.

**2. <u>Space Study Work Group Report Update</u>**

Jeff Thompson, Director of Asset Management Services, said this topic was last reviewed in April 2015. He is here this evening with an update. He recognized and thanked the members of the Space Study Workgroup, and provided the following update:

***<u>Progress and Current Recommendations</u>***

The following summarize the group's major areas of progress and recommendations to the Board in anticipation of the FY2016-21 CIP process.

***1. Progress of appropriated Capital Projects addressed by the Space Study Work Group***

The Cedar Grove Community Center, Environment and Agricultural Center, Sportsplex Fieldhouse, and Orange County Detention Center projects are moving forward in the design process. The Cedar Grove Community Center remains on schedule to open in the spring of 2016. Both the Environment and Agricultural Center and the Sportsplex Fieldhouse projects are in early stage design as is the Orange County Detention Center. The Board will be presented an update on the Detention Center design, including information regarding a potential attached Law Enforcement Center, during the December 15, 2015 regular meeting.

***2. Progress of minor space planning configuration recommendations***

Several small projects to reconfigure interior space and take advantage of opportunities identified in the Space Study process are currently underway.
The ***County Human Resources*** offices are benefiting from expanded training spaces in adjacent vacant opportunity spaces that formerly housed the County Engineer offices prior to the construction of the West Campus in 2009.

The ***County Attorney*** will soon occupy the vacant opportunity spaces formerly used by Morinaga America Foods in the lower level of the Link Center. This space will allow more useful administrative space for the County Attorney and his staff and will allow the vacated areas on the second floor to provide space consolidated areas for newly formed ***Community Relations Department***, the ***County Risk Manager***, the ***County Manager's*** office staff, and a small conference room.

Similar efficient reconfigurations discussed in the April 9 report are moving forward over the next few months. These involve ***Recreation*** personnel occupying administrative offices in the Whitted second floor in order to provide programmable recreation space within the Central Recreation facility, balancing constrained and opportunity spaces between the ***Health Department*** and ***Housing, Human Rights & Community Development*** within the Whitted Campus, providing for usable administrative space within Gateway to house growth within the ***Tax Administration*** Department, and providing useful crew lounge space within an opportunity space at ***Emergency Services.***

***3. Administrative Policy Development***

Staff is working toward building effective administrative policies within the purview of the County Manager in key areas identified in the April report:

***a. Records Retention and Comprehensive Storage Policy***

A major element of the charge of the Space Study Work Group, this body of work has progressed through a collaborative effort of the records retention and storage subgroup led by Alan Dorman of Asset Management Services. This group has successfully partnered with the State Department of Cultural Resources to frame the practices to efficiently manage and store the County's paper and electronic records as well as schedule the proper disposal of unnecessary documents according to applicable laws. A final policy recommendation for the Manager's approval is expected in the spring of 2016.

***b. 3rd Party Tenancy Policy***

The Board may recall that many of the County's opportunity spaces not presently needed by County operations are currently leased by 3rd party tenants. This practice is efficient in that it allows the spaces to be available for County operations when needed; but also allows the spaces to be utilized for other important uses as well to off-set utility costs when not needed by the County. As stated in the April report, several "opportunity" spaces could be marketed to County partners in a mutually beneficial arrangement under an effective and equitable policy. The policy does not apply to the spaces covered by previous action by the Board (Soltys Adult Day Health Center, Rogers Road Community Center, Dickson House, etc.) while those agreements are active. A final policy recommendation will be presented to the Manager in the fall of 2015.

***c. Telework Policy***

Brenda Bartholomew, the County Human Resources Director, and Brennan Bouma, the County Sustainability Coordinator, are collaborating on drafting an administrative telework policy and the accompanying employee agreement for implementation in the spring of 2016. When finalized, the policy will be issued to the County Manager to lay out expectations and rules governing this optional benefit to County employees. Based on the eventual level of enrollment, this policy may help relieve space constraints and lower facility costs by leveraging technology to connect employees in remote locations.

## *4. FY2016-21 CIP Discussion Topics*

***a. Facility Accessibility Inspections and Recommendations***

Recent Capital Investment Plans include funds for continuous accessibility improvements such as automated doors, handrails, signage, and ramps. A recent Board petition for more subtle and less obvious accessibility improvements based upon a thorough accessibility inspection of County facilities has led to the development of the Facilities Accessibility sub group (within the larger Space Study work group), marshaled by Brennan Bouma in Asset Management Services and James Davis in Housing, Human Rights, and Community Development. Attachment B, "Accessibility Initiatives Update", highlights the progress of this effort to date.

A request for funding for additional accessibility initiatives may be presented during the FY2016-21 process.

***b. Southern Campus Recommendations – Department on Aging***

In June 2014, the Chapel Hill Town Council awarded a Special Use Permit governing the entire 33.5 acre Southern Campus site for a 25 year period according to a master plan approved by the Board of Orange County Commissioners in 2013. On June 2, 2015, the Board heard a presentation given by staff and Clarion Associates with regard to potential development initiatives within the Southern Campus. The full presentation is located at http://www.orangecountync.gov/Southern_Campus_Final_Report.pdf

***Department on Aging Needs*.** The aging facilities (Seymour Center and Central Orange Senior Center) continue to experience rapid growth and are constrained by the physical space limitations. The work group recommends expanding Aging facility programming and administrative spaces in the form of interior upfit construction in both the Seymour and Central Orange Facilities in the near term. The work group also recommends allocating monies to assist in the Master Aging Plan process with respect to identifying and planning

for longer term space needs. Representatives from the Department on Aging will be present to speak to these needs and answer questions.

***Southern Human Services Center Expansion.*** The Board may recall that the FY2015-19 CIP contemplates a significant expansion that may house a southern Dental Clinic, expanded medical and social services facilities, site/parking improvements, and building system improvements. The work group has not reached consensus on the precise expansion needs, especially since the Interfaith Council Community House has now opened with potential dental service capacity. The work group has also identified the Southern Campus as a potential site for necessary business continuity infrastructure (redundant Information Technologies data center and 911 emergency communications center) that should be considered within a contemplated Southern Human Services Center expansion capital project.

Commissioner Dorosin asked if the master plan for the Southern Human Services Center campus included renovations to the Seymour Center.

Jeff Thompson said it does, but it is not currently plotted in the Capital Investment Plan (CIP).

Commissioner Dorosin clarified that the long-term plan does include the senior center.

Jeff Thompson said yes.

Chair McKee said he recalled the possibility of adding space to the Seymour Center without adding a second floor.

Jeff Thompson said this possibility was discussed at the June 2nd meeting, and the details are outlined in the packet this evening.

Commissioner Jacobs asked if the seniors pay to use the fitness center at the Seymour Center.

Janice Tyler said yes, and there are scholarships available.

Jeff Thompson said there is not a staff consensus regarding the Southern Human Services Center expansion. He said the nearby InterFaith Council (IFC) community house has dental facilities which may serve as an alternative to housing a dental clinic at the Southern Campus.

Commissioner Rich said she is not comfortable sending women and children to the IFC shelter for dental visits.

Bonnie Hammersley said she met with IFC and currently the dental clinic can only serve the current clients at IFC. She added that there is interest from IFC and the Town of Chapel Hill, because of the minimal use of that portion of the facility. She said the Board would remain updated regarding this possibility.

Jeff Thompson said all of these ideas will be brought back to the BOCC with updates and further recommendations.

***c. <u>Location and breadth of job and skills training</u>***

The work group recommends the Board continue the re-alignment of County job and skills training resources to maximize their service delivery to County residents. The Department of Social Services is deploying more centralized services within the Hillsborough Commons location and substantially re-purposing the somewhat parking “stressed” Skills Development Center in Chapel Hill. The County has recently extended its long-term lease arrangement to control the former Dollar Tree space adjacent to the current leased property in order to implement this strategy. Should this strategy continue successfully, additional unoccupied space may be purchased within the existing Hillsborough Commons facility.

Additionally, the conversation continues between Orange County and Chapel Hill with regard to working together on a potentially mutually beneficial solution for the "stressed" properties of 501/503 Franklin and the Former Town Hall, currently occupied by the Interfaith Council Men's Shelter.

This strategy must also consider providing additional job and skills training space as part of the long-term Southern Campus expansion to provide a presence for these services supporting southern Orange County.

Jeff Thompson said there is an option to buy the Hillsborough Commons as well as the rest of that facility. He said the possibility of pursuing the Chapel Hill Old Town Hall complex is being considered as well.

Commissioner Jacobs asked if the option to purchase Hillsborough Commons remains the same, or if it is a renegotiated option.

Jeff Thompson said it is a renegotiated option that includes a lease expansion, as well as the option to purchase. He said purchase prices are currently being negotiated.

Commissioner Jacobs said if the entire Hillsborough Commons is purchased, could portions of it be rented out to the private sector.

Jeff Thompson said yes.

***d. <u>Emergency Services hardened location</u>***

510 Meadowlands facility is not a "hardened" facility and is susceptible to inclement weather and wind damage. The work group discussed reconfiguring the lower level of the West Campus Office Building in Hillsborough to house the primary 911 communications center in the long term. The West Campus Office Building was originally designed with for a potential emergency operations center. It features a below grade facility with the walk out covered structured parking deck, twin backup, natural gas powered generators, and equivalent operating space as the 510 Meadowlands facility. Should this permanent solution ever be contemplated, the current public meeting rooms and Child Support Enforcement would need to be appropriately relocated.

***<u>Space Study Work Group Organization Going Forward</u>***

This update, along with the April 2015 report and its underlying space inventory and analysis, establish the base conditions for future study while staying consistent with the original charge. Their subgroups will continue to meet.

The space study work group "sub groups" (Aging, Emergency Services, Justice Facilities, Library, etc.) will be aligned appropriately and integrated within the emerging Functional Leadership Teams for the purpose of space needs topics. These teams will be supported and facilitated by AMS staff in their space discussions and deliberations.

In the fall of each year, the Space Study Work Group will facilitate space-related discussions with the Functional Leadership Teams in order to collect their input for the CIP process and present the set of discussion topics and themes to the Manager and Board.

Chair McKee said the workgroup felt that this would be an on-going discussion, and the entire group would meet a few times a year in an on-going manner.

Commissioner Rich asked if there was an update regarding the Rosemary Old Town Hall/IFC Kitchen.

Bonnie Hammersley said this was discussed with the other Town Managers, and one of the biggest obstacles is the uncertainty of the date for the removal of the IFC kitchen. She said it was decided that the group of interested stakeholders would be reconvened, but there is no timeline at this point. She stressed the commitment to long range planning, while small details fall into place.

Commissioner Rich said it will be important to evaluate the amount of renovations that will be needed in this building and the costs related to said renovations.

Commissioner Jacobs said he recalled a structural analysis was completed for this building.

Jeff Thompson said there is a structural analysis, but any existing costs estimates are soft given that the specific future use of the building is unknown.

Commissioner Jacobs asked if it is the supposition that all parties would be financial contributors or that the County would bear the cost.

Bonnie Hammersley said that has not been discussed yet since the new location of IFC kitchen at West Main Street in Carrboro needs to be finalized.

Commissioner Jacobs said all of the other partners are not contributing to the Visitor's Bureau (VB) now, and if the VB were moved there, it would benefit all to contribute.

Commissioner Rich said the Town of Chapel Hill does contribute a partial amount, but the Towns of Hillsborough and Carrboro do not contribute.

Commissioner Jacobs asked if there are plans for the Link Government Services Center Annex.

Jeff Thompson said the Board of Elections is now using the full site, and it is the best location for them.

Commissioner Rich asked if the small workgroups will be meeting quarterly or as needed.

Jeff Thompson said the subgroups would meet as needed.

Chair McKee said this project is ongoing, and the smaller groups will work more often than the bigger group.

Commissioner Dorosin asked if there is a sense that Orange County is growing and will need more space. He asked if there is any space that will no longer be needed, like the old jail for example.

Jeff Thompson said in the short to mid-term there is enough space. He said there are some mismatches in areas of need versus space available. He said in the long-term the spacing needs can be managed. He said facilities that are being vacated could be repurposed or sold, depending on the space.

Bonnie Hammersley said in reference to the schedule for the committee, she will rely on this committee in regards to CIP budgeting. She said all facilities will be evaluated in an ongoing manner, as pertains to their efficiency and effectiveness, with all reports being brought to the BOCC for decisions.

Commissioner Dorosin said he understood that, but asked if there are actual expectations of the growth of county government in the next 20 years.

Bonnie Hammersley said the hope is that more space is not needed, but rather to use efficiently the space that currently exists.

Commissioner Price said this committee wanted to make sure all the facilities are ADA compliant, and the trends in teleworking are being studied.

Commissioner Dorosin said he would like to get information about the predications for the County's population, so as to know what is expected in growth data.

Chair McKee said that was part of their discussion, but not a focal point. He said the subgroups on teleworking and records retention were focusing on efficiencies in our facilities.

He said Commissioner Dorosin's request would be a focal point with the Manager and staff going forward.

Bonnie Hammersley said she would bring back this information.

Commissioner Jacobs thanked the group for finding ways to address the accessibility issues. He said he would like to see what staff is designing for the agricultural facility.

Jeff Thompson said the committee selected the architect, and they are on the front end of that project.

Commissioner Jacobs said Hillsborough is coming on line with 1000 housing units, and Collins Ridge is pushing 1150 more, yet a school site is not being discussed. He said this housing increase will have a huge impact on the central library, and asked if there is a plan to address the demand. He said Hillsborough Alliance wants to move out of the museum, and perhaps Hillsborough Commons may be an option, or locating functions in the Colonial Inn once it is renovated. He asked if the committee would have a discussion about the options to address the growth in the Town of Hillsborough that will affect County services.

**3. <u>Affordable Housing Plan Update and Affordable Housing Fund Criteria - Additional Discussion from October 6, 2015 Meeting</u>**

The following items were noted at the Commissioners' places:

- Blue folder: contained: the Orange County Home Consortium Program Year 2015-2020 Five Year Consolidated Plan and FY 2015 Annual Action Plan; a revised timeline for the Orange County Affordable Housing Plan Update; and site maps for possible Orange County Owned parcels for affordable housing
- PowerPoint Presentation
- Site maps (same as above) with text narrative
- Mobile Home and Mobile Home Parks Fact sheet
- 2014 Mobile Home Park Locations Map
- Potential Affordable Housing Development Area Map

Audrey Spencer-Horsley, Housing, Human Rights, and Community Development Director, reviewed the contents of the blue folder with the Board, and she mentioned that there was a revised schedule/timeline included for the Orange County Affordable Housing Plan. She said she is here tonight to talk briefly about some of the work that has been done on the Orange County Affordable Housing Plan. She said the common data collection across the nation is most often used, and anything beyond that is community driven.

Audrey Spencer-Horsley said Orange County and the Towns have approved the consolidated plan, and this is required by HUD for the HOME funding they receive. She said the County acts as the lead agency within Orange County. She said HOME funding may sustain some cuts, but they will not be draconian in nature.

Audrey Spencer-Horsley said in the consolidated plan there are two main pieces: a needs assessment, and a housing market analysis. She said this plan has been done since 1995 and will provide a foundation for them. She said this plan is included in the blue folder as well.

Audrey Spencer-Horsley said the needs assessment looks at the cost burden. She said the number for affordable rental housing needs is 40-1. She said there is over 20% that are 50 % cost burden. She said at their last meeting she mentioned the great need for affordable rentals.

Audrey Spencer-Horsley said she had been working on preparing a five-year plan for the housing choice voucher program. She said there are 623 units that the County is

authorized to lease to eligible clients. She said another required piece of the continuum of care is the consolidated plan.

Audrey Spencer-Horsley said finally staff would bring back an analysis of impediment that looks at fair housing stock, barriers to fair housing, and the location and availability of land to develop housing. She said that document would come to the Board in December.

Audrey Spencer-Horsley said the second phase is the development of strategies, working with affordable housing partners and what they have accomplished with past bonds, and the challenges they are facing with County programs. She said the third phase will be to make recommendations that will have the most impact on affordable housing in the County.

Bonnie Hammersley said she had been working with Audrey Spencer-Horsley for a plan on affordable housing, and the timeline indicates this plan would be complete in February 2016. She has been working with the Town Managers to make this a more coordinated effort, along with Housing Directors and Economic Development Directors.

Audrey Spencer-Horsley said various internal departments have been working together. She said the inventory of mobile home parks, tiny homes, and the like, is being gathered.

Craig Benedict, Orange County Planning Director, said Audrey Spencer-Horsley developed internal teams to get background information.

Craig Benedict made the following PowerPoint presentation:

**Affordable Housing Plan Update**
**Board of County Commissioners**
**Work Session**
**November 10, 2015**

**Affordable Housing Plan Update**

- Overview – Consolidated Housing Plan
- Timeline
- Existing Conditions
    - Mobile Home Park Inventory
    - Small Housing (i.e. Tiny Houses and Cottage Homes)
    - Orange County Owned Properties
- Moving Forward and Next Steps
- Strategies
- Questions

**Overview Consolidated Housing Plan**

**Timeline: See November 10 Abstract-Attachment 3**

**Existing Conditions: Mobile Home Park Inventory**

**Affordable Housing Plan Update**
**Mobile Home Park Inventory**

- Background Research
    - Mobile Home Data
    - Socio-Economic Data
    - Land Use Maps
    - Water and Sewer Conditions
    - Public Transit
    - Public Services and Employment

**2014 Mobile Home Park Locations (map)**
**Mobile Home Park Inventory**

- Mobile homes and mobile home parks are currently permitted in Orange County.
    - Total Number of Mobile Homes = **4,256**
    - Total Number of Mobile Home Parks = **100**
        - Total Number of Spaces Located in Mobile Home Parks = **2,297**
        - Total Number of Occupied Spaces Located in Mobile Home Parks = **1,461**

  Based on information from the Orange County Tax Office there are approximately **836** unoccupied spaces located in mobile home parks.
- Mobile Home Parks – Operating Wastewater System
  83% on site septic 14% Public System 3% State Permitted
- Mobile Home Parks – Operating Water System
  49% community well 34% Public System 17% State Permitted
- Only **14%** of existing mobile homes are operating on a public water and public sewer system.

Commissioner Jacobs asked if the number housing units within Orange County is known.
Craig Benedict said approximately 53,000 units.
Commissioner Jacobs asked if the number of units that are owner occupied is known.
Audrey Spencer-Horsley said this information can be gathered.

**Potential Affordable Housing Development Area (map)**

**Median Household Income by Block Groups American Community Survey 2009-13 (map)**

**Orange County Services/Employment (map)**

**Existing Conditions**
**Small Housing**

Affordable Housing Plan Update-map
Affordable Housing Plan Update-map

**Small Housing**

- Tiny Houses
    - A mobile, residential structure attached to a chassis with wheels that includes living, kitchen, and bath space and averages 75 to 200 square feet in size.
    - Tiny houses attached to a chassis **are not** identified by the North Carolina State Residential Code and the Orange County Unified Development Ordinance (UDO).
- Cottage Homes
    - A residential structure that can be ‘stick’ built or modular construction which is placed on a permanent foundation and averages 300 to 800 square feet in size.
    - Cottage homes can be permitted as a single family dwelling unit or efficiency apartment (accessory dwelling unit) if constructed to standards of the North Carolina State Residential Code and UDO.

Chair McKee asked if the County would be able to change the definition of a tiny house.

Craig Benedict said the building code could not be changed, but the County could say there are mobile home and recreational vehicle parks.

Chair McKee said the definition could be written around what the County wanted it to be.

Craig Benedict said yes.

Commissioner Dorosin asked if he owned property, could he place 10 tiny homes on his land.

Craig Benedict said he could not, as tiny homes are not built to the North Carolina single family housing code.

Commissioner Dorosin asked if he could build 10 cottage homes on his property.

Craig Benedict said multiple cottage homes could not go on one lot, but there are changes being considered to these codes.

Commissioner Rich asked if the cottage homes or developments that are currently being built required State approval.

Craig Benedict said if the micro homes meet building code, they can be built. He said if zoning changes are needed that is done by the County.

Commissioner Rich asked if the County is its own enemy in regards to this issue.

Craig Benedict said yes. He said as new housing ideas come forth, codes must be amended to catch up.

Chair McKee asked if there was cooperation from the Towns regarding the extension of sewer and water, could the density of homes could be increased.

Craig Benedict said yes.

Commissioner Rich asked if the Greene Tract is being considered for development.

Audrey Spencer-Horsley said that would be coming next in the presentation.

**Existing Conditions**
**Orange County Owned Properties**

**HAND OUT**
**Potential Affordable Housing Sites hand out**

Jeff Thompson referred to the handout with a white cover. He said the criteria on the front page of the handout yielded sites for affordable housing. He said this does not mean these can be developed, but are rather the first tier of a filter that will still need land use regulations applied. He said this handout is a series of small lots which total about 220 acres, noting the Greene Tract is on page 14. He reviewed these potential lot sites.

Commissioner Rich asked if there is a process for when, how, and why the County acquires parcels of land, such as those on this list.

Jeff Thompson said he does not have that information, but noted all these parcels have access to water and sewer along with fairly reasonable topography. He said the infill lots could be considered for single families. He said, as it stands, the Greene Tract has an 18-acre restriction on housing. He said this is an agreement between the County and the Towns of Carrboro and Chapel Hill.

Commissioner Jacobs asked if the entire Greene Tract is accessible for affordable housing.

Craig Benedict said only 18 of the 104 acres are scheduled for affordable housing. He said there have been some discussions, as part of small area plans, about a possible expansion of that amount. He said the Rogers Road area is a subset of it, and the planning processes to continue in that area will include looking at the Greene Tract. He said this is shown on map 14.

Commissioner Jacobs asked if this is the same area where a potential school site has been considered.

Craig Benedict said both a school and park site have been considered here. He said the area south of the 18 acres could be a school or park area, but would require an agreement and an amendment to a 2001 resolution. He said as sewer is being planned for the Rogers Road area, the potential of the Greene Tract is being kept in mind.

Commissioner Jacobs said a commitment was made to make an open space on the Greene Tract, and he wished this would be put down in writing. He said the reason it is not permanently designed that way is because the Triangle Land Conservancy did not accept an easement to be responsible for it. He said this topic keeps coming up, but there was a commitment in 2001 to keep it open space, and he is petitioning to resolve this.

Bonnie Hammersley said this map does not imply that affordable housing will be placed here, but rather gives an overview of County owned land that is available for possible consideration. She said staff will proceed with Commissioner Jacob's request.

Commissioner Jacobs said there is parkland all over the County that has not been included in this presentation. He said there could be a mobile home park on the acreage on Schley Road, but it is not included, as it is a park. He said he is confused why this Greene Tract acreage is included when it is designated to be a park as well.

Bonnie Hammersley said Commissioner Jacobs is correct, and that staff did not include any land from the Parks master plan. She added that the aforementioned Greene Tract land was not in the Parks master plan.

Commissioner Jacobs said it should be.

Commissioner Dorosin said this is an exciting set of sites with some small parcels small and some large. He would urge them to push whatever the next steps are. He said it is critical to be able to find other ways to subsidize affordable housing, and one way is with the land. He said these are scattered sites which allow for decentralized affordability. He said not all the sites have access to public transportation, but all have water and sewer. He suggested pursuing these parcels, and ones that may be large enough for large developments, then fix the zoning issues and maximize the sites.

Commissioner Dorosin referred to the 9 criteria on first page of the handout, and asked if they should be prioritized in some fashion. He said to prioritize the list and build some houses, so that opportunities do not pass by.

Commissioner Price asked if staff is considering any of these sites for mobile home parks.

Audrey Spencer-Horsley said specific uses have not yet been considered, but it is an option.

Craig Benedict said in existing mobile parks there are about 800 unused lots, and the reason for this needs to be determined so that they can possibly be filled.

Craig Benedict said some in Efland are thinking about updating their parks now that they are on water and sewer, which could possibly lead to greater density.

Chair McKee asked if there was a process for determining the 800 unused mobile home lots.

Ashley Moncado, Special Projects Planner, said the tax office puts out this information, and it is gathered by a voluntary survey to the park owners. She said the accuracy is therefore unsure, and the County has not put boots on the ground yet.

Chair McKee suggested that staff do so.

Audrey Spencer-Horsley said one of the recommendations is to have their housing inspectors go out in the field. She said there was a mobile home inventory done in 2009, and an update of this information is necessary.

Commissioner Dorosin said it is important to speak with the residents of the mobile home parks, not just the owners. He said many residents live in unsafe conditions and desire to get out of these parks, if possible.

Commissioner Burroughs said Justice United is doing some of that already, and there is an opportunity for collaboration.

Commissioner Burroughs said if the County is making investments, it should be kept in mind that stick built homes are safer, especially for emergency situations.

Commissioner Price said people should be encouraged to live in stick built homes, but many prefer a manufactured home.

Commissioner Pelissier referenced the pieces of property that were excluded due to lack of water and sewer and asked if some of these properties could still be used for things like tiny homes. She suggested that these parcels of land should not automatically be excluded.

Commissioner Jacobs said he would like to know how the tax office assesses mobile homes, as they are often considered to decline in value. He said all options should be considered before deciding which direction to go in.

Commissioner Jacobs said he appreciated the idea of a neutral third party reaching out to renters and owners of mobile homes. He said the mobile home renters and owners may perceive such a person as a threat and possible resistance should be anticipated. He said it might be relevant to look at what other counties are doing, such as Wake County.

Commissioner Dorosin said he was not suggesting for Orange County to buy or own units.

Chair McKee said if the County considers purchasing land in the future, the underused mobile home parks should be identified, as they may be possibilities for other housing options.

Bonnie Hammersley said the third party consultant could keep land-banking options in mind while assessing the mobile home parks.

Chair McKee said this is a wise option.

Commissioner Rich referred to the property at 1801 Ephesus Church Road in Chapel Hill and asked if the Town of Chapel Hill has been approached about a possible partnership on this property.

Jeff Thompson said he has not visited this site, but there are discussions taking place with the Town of Chapel Hill about this site as well as other sites. He said Chapel Hill is completing the same exercise as the County in identifying property for their affordable housing inventory.

Commissioner Jacobs said Orange Water and Sewer Association (OWASA) also has parcels they do not know what to do with, and suggested that staff contact them to see if there are any parcels that could be conveyed for affordable housing purposes.

Bonnie Hammersley said this was a coordinated effort tonight, and she apologized that she did not get these documents to the BOCC earlier. She said this error will not happen again.

Bonnie Hammersley requested that Item #5 be moved up prior to Item #4, since Chapel Hill Mayor Elect Pam Hemminger was in attendance and may wish to speak on the item.

Chair McKee agreed.

**5. <u>Upper Neuse River Basin Association Update</u>**

David Stancil, Department of Environment, Agriculture, Parks and Recreation (DEAPR) Director, said there is an attempt to have a “water issues” conversation each year.

Tom Davis, Water Resources Coordinator, introduced Pam Hemminger who is the Upper Neuse River Basin Association (UNRBA) Chair, and Mayor Elect of the Town of Chapel Hill.

Tom Davis said UNRBA is made up of many towns and counties, and Orange County has the most land in the watershed. He reviewed the following information:

**BACKGROUND:**

The Upper Neuse River Basin Association (UNRBA), of which Orange County is a member, is working on a multi-year effort (titled "The Path Forward") to revise Stage II of the Falls Lake Nutrient Management Strategy (Falls Lake Rules). As currently written, Stage II of the Falls Lake Rules requires local governments, the North Carolina Department of Transportation (NCDOT), the agricultural community, and other regulated parties located in the Falls Lake watershed (Attachment A) to reduce nitrogen and phosphorus nutrient loading to Falls Lake by 40% and 77%, respectively. While the members of the UNRBA agree that protecting Falls Lake as the City of Raleigh's water supply is paramount, the members also agree that there are serious technical and financial impediments to meeting these nutrient reduction goals.

Additional background information concerning the Falls Lake Rules, the underlying Consensus Principles, estimated costs to comply with the Falls Lake Rules, and related information are provided in Attachment B, excerpts from the agenda abstract from the October 14, 2014 Board of County Commissioners work session.

Tom Davis said the UNRBA continues to make progress on several important projects, including:

1. Lake and Watershed Water Quality Monitoring
2. BMP Nutrient Credit Development
3. Development of Nutrient Credit Calculation Tool
4. Falls Lake Rules Review

Tom Davis then reviewed each of these projects:

<u>1. Lake and Watershed Water Quality Monitoring</u>

CardnoEntrix, the consultant working for the UNRBA, completed the first 12 months of water quality sampling in July 2015. The Falls Lake Rules stipulate that in order for outside data to be evaluated during the re-examination of Stage II of the Falls Lake Rules, a minimum of three years of sampling data must be collected for the data to be considered by the Environmental Management Commission (EMC). The UNRBA's water quality sampling program is producing information for the following purposes:

- Determination of sources of nutrients in the watershed and the loading of nutrients from individual jurisdictions to Falls Lake;
- Falls Lake response modeling;
- Development of data for consideration of additional regulatory options; and
- Linkage of water quality conditions in Falls Lake to the designated uses of the Lake.

Attachment A identifies the locations of surface water sampling stations for both the jurisdictional and lake tributary nutrient loading determination projects. All of the data collected is available for review at the web site set up for this purpose: http://unrba-wqp.cardno.com/

Attachment C is an example of the results obtained from water quality samples collected in five streams that feed into the northern end of Falls Lake. Fairly significant variations in these nutrient concentrations are seen among the five streams, as well as over the course of the time interval shown for two of the streams listed. Attachment D illustrates variations in the volume of stream flow in three streams in the upper portion of the Falls Lake watershed. The combination of nutrient concentration and rate of streamflow in each individual stream determines the

amount (loading) of nutrients entering Falls Lake, so a stream that contains a low concentration of nutrients (such as Eno River) could actually contribute more nutrient loading if its streamflow was significantly larger than a second stream with a higher concentration of nutrients (such as Ellerbe Creek).

CardnoEntrix is also collecting data for the following Special Studies as part of the Falls Rules re-examination process:

- Falls Lake Constriction Point Monitoring
- High Flow Monitoring
- Storm Event Sampling
- Sediment Sample Analysis
- Light Penetration Analysis
- Volatile Suspended Sediment Determination
- Survey of Recreational Use of Falls Lake
- Model Performance Evaluation
- Evaluation of Regulatory Options to Falls Lake Rules

Project Outcomes

- Determine sources of nutrients.
- Quantify nutrient loading entering the lake
- Examine nutrient related processes in the lake.
- New data will be used in lake and water-shed re-modeling
- Goal – more appropriate, achievable Stage II nutrient reduction goals

Commissioner Dorosin asked if there is a specific party responsible for determining the rules.

Tom Davis said the legislature passed the enabling legislation, and the rules were enacted in 2011. He said the Division of Water Resources (DWR) is the body that wrote the rules.

Commissioner Dorosin asked if the intent is to gather the data and provide it to the DWR so that the rules can be revised.

Tom Davis said yes.

2. <u>BMP Nutrient Credit Development</u>

CardnoEntrix is continuing to work on a project to develop nutrient reduction Best Management Practice (BMP) credits. The project will be beneficial to UNRBA member governments (including Orange County) by increasing the number of structural devices and other stormwater practices with known nutrient reduction values. These BMPs will then be available for affected parties to use to meet the required nutrient reduction goals under Stages I and II of the Falls Lake Rules. This is sometime referred to as increasing the number of nutrient reduction measures available in the “BMP tool box”. Subject matter experts are developing nutrient credit values and practice standards for three “batches” of BMPs:

| | |
|---|---|
| BMP Batch 1: | Infiltration Devices |
| | Filter Strips |
| | Soil Amendment |
| BMP Batch 2: | Bioretention Devices |
| | Land Conservation |
| | Pervious Area Nutrient Management |

Batch 3: Livestock Exclusion
Riparian Buffers
Elimination of Illicit Discharges

After CardnoEntrix develops draft nutrient credits and practice standards for each of these BMPs, the NC Division of Water Resources (DWR) will evaluate this information and determine what nutrient reduction credit is appropriate for each BMP. Once this process is completed, affected parties, including local governments, will be able to utilize these BMPs to meet required nutrient reduction targets.

Project Outcomes

- Develop nutrient reduction credits for BMPs
- Increase # of BMPs available to use in achieving required nutrient reductions

3. Development of Nutrient Credit Calculation Tool

Also ongoing is the development of a spreadsheet-based tool for local governments to calculate nutrient reduction credits for specific on-site nutrient reduction measures, as well as for more regional programmatic practices such as street sweeping or fertilizer management. This tool will allow municipalities in the watershed to evaluate the impact of various nutrient reduction devices and practices at different locations in the watershed, allowing local governments to determine the most cost-effective means of meeting required nutrient reductions.

Project Outcome

- Ability to evaluate potential BMPs at different locations – maximize efficiency, cost effectiveness

4. Falls Lake Rules Review

The Regulatory Reform Act of 2013 (HB74) mandated that all State rules expire within ten years of their effective dates, unless readopted. Currently, DWR is concluding an informal comment period for the Falls Lake Rules, which will be followed in 2016 by a public comment period. UNRBA is working to develop comments on the Falls Lake Rules that all UNRBA members can agree on. Several UNRBA local governments, including Orange County, have already submitted informal comments concerning these rules.
A tentative schedule for ongoing UNRBA tasks is included as Attachment E. As can be seen from this schedule, the UNRBA anticipates continuing the studies discussed herein for the next several years. Stage II of the Falls Rules is the period extending from 2021 to 2036, with the overall goal of meeting nutrient related water quality standards throughout Falls Lake by 2041. This schedule may change as a result of the Rules Review process that is underway.

Project Outcome

- Continuing dialogue with DWR regarding Rules

Tom Davis provided some water quality monitory data (graph).
Tom Davis reviewed the upcoming UNRBA Schedule.

Pam Hemminger said the UNRBA has worked with the Legislature, in an effort to get the Legislature to leave them alone. She said the ultimate goal is to make the lake cleaner. She said Orange County does not contribute a lot to the nutrient loading. She said the monitoring group is fascinating. She said the North Carolina Department of Environment and

Natural Resources (DENR) have gone through some cutbacks, and this monitoring is vital for them to find out what the end result should be. She said the UNRBA has been at the table, and working with the various groups has been beneficial. She said the State has taken notice, and is using this as an example statewide. She said UNRBA has also been in the education business with developers and staff about how to implement these rules successfully.

Chair McKee said he has heard many complimentary comments from other counties about Pam Hemminger's leadership as Chair of UNRBA. He said the fear from the agricultural community is that the burden of these reductions would come at the top of the lake, but that fear has been toned down.

Pam Hemminger said Raleigh is asking for a bigger water allocation out of Falls Lake, and the UNRBA has researched extensively the implications this would have on all of their monitoring. She said Raleigh will receive an answer to this question in June 2016.

Chair McKee said the need for an additional water source in Raleigh is driven by the population growth.

Commissioner Jacobs asked if the group has had a discussion about Raleigh and Durham protecting land in the upper Eno using the same model for Falls Lake.

Pam Hemminger said Raleigh participates with the Upper Neuse River Basin Initiative and has contributed to some studies. She said Durham has reallocated some resources including some monitoring stations.

Commissioner Jacobs asked if there is a plan going forward to purchase conservation easements in agricultural areas or to help protect natural areas in the upper part of the water shed close to the municipalities.

Tom Davis said with the potential BMPs, land conservation is included. He said it will be a great help if DWR approves a nutrient reduction credit for land conservation.

Commissioner Jacobs said that would bring funds to bear.

Pam Hemminger said they would get a better benefit by bringing funds to bear.

Commissioner Jacobs noted a spelling mistake on page 10.

Pam Hemminger said she had been the Chair of the UNRBA for six years, and it is important that someone other than Raleigh or Durham be in a leadership position. She is willing to train a new commissioner for a year or so, if needed. She is concerned about Orange County's interest in the UNRBA as the County has so much more agricultural issues. She will respect any decision the Board makes and would be happy to continue serving, but it is a large time commitment. She said it has been a wonderful experience, but a potential new representative would need to be brought up to speed.

John Roberts said the UNRBA bylaws do not require anyone to roll off the Board over a period of time, and there is no conflict of interest. He said the decision is up to the BOCC, noting the BOCC appoints a Director and two alternate directors.

Commissioner Jacobs asked the term limits of the Chair's office.

Pam Hemminger said her officer term is done every January, and her term on the Board is for three years.

Chair McKee said Pam Hemminger's offer to train a new appointee is a helpful one.

Commissioner Rich asked if this appointment will come up in the near future.

Chair McKee said the appointment would come up in December since Pam Hemminger's term ends at the end of November.

**4. <u>Orange Well Net (OWN) Update</u>**

Tom Davis made the following PowerPoint presentation, and reviewed the background information below:

**<u>Orange Well Net</u>**

**OWN Well Locations and Details (map and graphs)**

**OWN Updates**

- Brumley Forest Preserve bedrock well
- OWN data used to estimate groundwater recharge:
  - Water Table Fluctuation Method
  - USGS Groundwater Toolbox also used
- Public outreach:
  - All OWN groundwater level data online
  - Basic information about water in Orange County - in prep
  - Means of maximizing well yield - in prep
  - OWN data and groundwater in Orange County – in prep

**BACKGROUND:**

DEAPR's groundwater observation well network, Orange Well Net (OWN), uses a combination of bedrock and regolith wells spread across the main types of bedrock geology present in Orange County. Regolith wells measure groundwater levels in the unconsolidated material present above bedrock to monitor natural stresses on the quantity of groundwater available in storage caused by variations in climatic conditions. Bedrock wells monitor changes in groundwater levels in the bedrock across the County.

Groundwater level data collection is underway at seven bedrock wells and five regolith wells. In early 2015, a bedrock well on Triangle Land Conservancy property was added to the network. Attachment A is a listing of well construction details for the current OWN observation wells. Attachment B is a map showing the locations of the wells that are currently in use along with the underlying geology.

All data collected by OWN is available to the public on the NC Division of Water Resources (DWR) web site provided below. The web site includes maps of well locations, geologic information, and statistical curves that provide monthly minimum, mean, and maximum groundwater level information for each well in the network. This information can be used to compare recent groundwater levels with historical values.
http://www.ncwater.org/Data_and_Modeling/Ground_Water_Databases

Staff plans to begin an outreach campaign on groundwater information for County residents in late 2015-early 2016. Informational outreach materials are being designed that will help residents learn a variety of useful information, from basic hydrologic concepts to measures for planning the installation of supply wells which may help increase the yield of water from these wells (please see Attachments C and D). These documents will be used in combination with data gathered from the OWN network to inform residents of common facts about hydrogeology, especially with regard to groundwater occurrence and usage.

**6. Eno River Hydrilla Management Pilot Study Update**

Tom Davis reviewed the following information:

**BACKGROUND:**

Hydrilla (*Hydrilla verticillata*) is an invasive aquatic plant native to Asia that was first noted in the United States in the 1960s (Attachment A). Since then, hydrilla has spread rapidly in the U.S., reaching nuisance levels in many locations. Hydrilla has been called "the perfect aquatic plant" because it spreads rapidly, is able to reproduce in four different ways, grows in extremely low light, and is able to crowd out native aquatic vegetation.

For many years hydrilla has been present in portions of the Eno watershed, including Lake Orange, Corporation Lake, and the West Fork of the Eno Reservoir. More recently, Eno River State Park staff noted that hydrilla is their “number one resource management problem in the Eno”. Hydrilla causes negative water quality impacts, can be harmful to the river ecosystem, and adversely impacts the recreational experiences of people visiting the State Park and elsewhere. Hydrilla can be spread from one water body to another via watercraft or waterfowl. The plant can also be spread by people discarding aquarium materials into waterways.

In 2011 the Eno River Hydrilla Management Task Force, comprised of local governments and state agencies, including the Aquatic Weed Program of the NC Division of Water Resources, began planning to address the hydrilla infestation in the Eno River. The Task Force agreed to conduct a two-year pilot study to examine the effectiveness of using a US Environmental Protection Agency-approved herbicide to manage hydrilla in a portion of the river. In April 2015 the Task Force hosted a public information open house in Hillsborough concerning the pilot study (Attachment B). Details were provided on the problem, the results of an Environmental Assessment for the proposed project, and the selection of a contractor to apply and monitor the herbicide in the Eno. Additional public outreach efforts were conducted throughout the watershed (Attachment C).

Pilot study herbicide treatments in the Eno River began in late May 2015. Low stream flows over the summer aided in maintaining a consistent concentration of fluridone, the active ingredient in the herbicide, throughout the treatment zone, from Lawrence Road east of Hillsborough downstream to Roxboro Road in Durham. Monitoring of the concentration of fluridone in various locations along the river occurred throughout the duration of the study. Monitoring of native vegetation, snails, crayfish and fish above and within the treatment zone was also conducted before and during the hydrilla treatment. Bleaching of hydrilla was observed after just one week of herbicide treatments. Within four weeks, there was notable reduction in the density of hydrilla in the treatment zone. Further herbicide treatment resulted in dramatic differences in hydrilla density between the treatment area and the untreated area upstream. Nearly-complete removal of visible hydrilla vegetation was reported at locations within the area of treatment.

The Eno Hydrilla Management Task Force will continue to evaluate data from surveys of the Eno River ecosystem both within and above the treatment zone. Native vegetation is responding positively. It is anticipated that the results of the first year of the pilot study will be overwhelmingly positive, and that the Task Force will proceed with the second year of treatment. Over the winter months, the Task Force will consider using a lower concentration of fluridone, starting the injection process earlier in the growing season, and adding a second injection location in order to further minimize the apparent impact to native plants. Following completion of the full two-year pilot study, the Task Force will begin to discuss long-term objectives for the management of hydrilla throughout the Eno River watershed.

Lastly, the County recently completed a contract with the NC Division of Water Resources for the addition of sterile grass carp to Lake Orange, which is infested with hydrilla. Grass carp are routinely used to help control hydrilla in lakes and reservoirs.

Chair McKee said all information should be put out to the public as soon as it comes in.

Commissioner Jacobs said the expected effect of the fluridone on the natural environment was not specifically known.

Tom Davis said toxicologists were consulted before the treatment started. He said the treatment zone was picked because it was below the water system in Hillsborough.

Bonnie Hammersley said this is the last work session of 2015. She said she, Travis Myren, and Chief Financial Officer Gary Donaldson started working on the 2016-2017 budget

workshops today, with the goal of making them more informative, to better meet the needs of the BOCC.

A motion was made by Commissioner Price, seconded by Commissioner Burroughs to adjourn the meeting at 10:04 p.m.

Earl McKee, Chair

Donna Baker,
Clerk to the Board

**ORANGE COUNTY**
**BOARD OF COMMISSIONERS**
**ACTION AGENDA ITEM ABSTRACT**
**Meeting Date:** December 7, 2015

**Action Agenda Item No.** 6-b

**SUBJECT:** Motor Vehicle Property Tax Releases/Refunds

**DEPARTMENT:** Tax Administration

**PUBLIC HEARING: (Y/N)** No

**ATTACHMENT(S):**
Resolution
Releases/Refunds Data Spreadsheet
Reason for Adjustment Summary

**INFORMATION CONTACT:**
Dwane Brinson, Tax Administrator,
(919) 245-2726

**PURPOSE:** To consider adoption of a resolution to release motor vehicle property tax values for eight (8) taxpayers with a total of eight (8) bills that will result in a reduction of revenue.

**BACKGROUND:** North Carolina General Statute (NCGS) 105-381(a)(1) allows a taxpayer to assert a valid defense to the enforcement of the collection of a tax assessed upon his/her property under three sets of circumstances:

(a) "a tax imposed through clerical error", for example when there is an actual error in mathematical calculation;
(b) "an illegal tax", such as when the vehicle should have been billed in another county, an incorrect name was used, or an incorrect rate code (the wrong combination of applicable county, municipal, fire district, etc. tax rates) was used;
(c) "a tax levied for an illegal purpose", which would involve charging a tax which was later deemed to be impermissible under state law.

NCGS 105-381(b), "Action of Governing Body" provides that "Upon receiving a taxpayer's written statement of defense and request for release or refund, the governing body of the taxing unit shall within 90 days after receipt of such a request determine whether the taxpayer has a valid defense to the tax imposed or any part thereof and shall either release or refund that portion of the amount that is determined to be in excess of the correct liability or notify the taxpayer in writing that no release or refund will be made".

For classified motor vehicles, NCGS 105-330.2(b) allows for a full or partial refund when a tax has been paid and a pending appeal for valuation reduction due to excessive mileage, vehicle damage, etc. is decided in the owner's favor.

**FINANCIAL IMPACT:** Approval of these release/refund requests will result in a net reduction of $1,896.91 to Orange County, the towns, and school and fire districts. Financial impact year to date for FY 2015-2016 is $30,484.86.

**SOCIAL JUSTICE IMPACT:** There is no Orange County Social Justice Goal impact associated with this item.

**RECOMMENDATION(S):** The Manager recommends that the Board:

- Accept the report reflecting the motor vehicle property tax releases/refunds requested in accordance with the NCGS; and
- Approve the attached release/refund resolution.

**NORTH CAROLINA** RES-2015-061

**ORANGE COUNTY**

**REFUND/RELEASE RESOLUTION (Approval)**

**Whereas,** North Carolina General Statutes 105-381 and/or 330.2(b) allows for the refund and/or release of taxes when the Board of County Commissioners determines that a taxpayer applying for the release/refund has a valid defense to the tax imposed; and

**Whereas,** the properties listed in each of the attached "Request for Property Tax Refund/Release" has been taxed and the tax has not been collected: and

**Whereas,** as to each of the properties listed in the Request for Property Tax Refund/Release, the taxpayer has timely applied in writing for a refund or release of the tax imposed and has presented a valid defense to the tax imposed as indicated on the Request for Property Tax Refund/Release.

**NOW, THEREFORE, IT IS RESOLVED BY THE BOARD OF COUNTY COMMISSIONERS OF ORANGE COUNTY THAT** the recommended property tax refund(s) and release(s) are approved.

Upon motion duly made and seconded, the foregoing resolution was passed by the following votes:

Ayes: Commissioners _____

_____

Noes: _____

I, Donna Baker, Clerk to the Board of Commissioners for the County of Orange, North Carolina, DO HEREBY CERTIFY that the foregoing has been carefully copied from the recorded minutes of the Board of Commissioners for said County at a regular meeting of said Board held on _____, said record having been made in the Minute Book of the minutes of said Board, and is a true copy of so much of said proceedings of said Board as relates in any way to the passage of the resolution described in said proceedings.

WITNESS my hand and the corporate seal of said County, this _____day of _____, 2015.

_____
Clerk to the Board of Commissioners

Clerical error G.S. 105-381(a)(1)(a)
Illegal tax G.S. 105-381(a)(1)(b)
Appraisal appeal G.S. 105-330.2(b)

# BOCC REPORT - REGISTERED MOTOR VEHICLES
# DECEMBER 7, 2015

| NAME | ABSTRACT NUMBER | BILLING YEAR | ORIGINAL VALUE | ADJUSTED VALUE | FINANCIAL IMPACT | REASON FOR ADJUSTMENT |
|---|---|---|---|---|---|---|
| Arnold, Erin | 23224336 | 2014 | 12,998 | 12,998 | (124.13) | Situs error (illegal tax) |
| Daye, Thomas Harold | 28371813 | 2015 | 27,600 | 500 | (248.95) | Acquired antique plate (appraisal appeal) |
| Foushee, William | 28571542 | 2015 | 23,900 | 500 | (364.57) | Acquired antique plate (appraisal appeal) |
| Morinaga America Foods, Inc. | 27378285 | 2015 | 15,130 | 15,130 | (140.12) | Situs error (illegal tax) |
| Ragan, Alvin Nelson | 28920700 | 2015 | 29,397 | 29,397 | (241.04) | Situs error (illegal tax) |
| Spell, Oscar | 22900551 | 2015 | 21,278 | 500 | (194.90) | Acquired antique plate (appraisal appeal) |
| Spivey, Angela Kay | 28398220 | 2015 | 23,387 | - | (421.92) | County changed to Chatham (illegal tax) |
| Widman, Daniel Seiffert | 26905703 | 2014 | 18,800 | 18,800 | (161.28) | Situs error (illegal tax) |
| | | | | Total | (1,896.91) | |

**Military Leave and Earning Statement**: Is a copy of a serviceman's payroll stub covering a particular pay period. This does list his home of record, which is his permanent state of residence where he would pay any state income taxes.

# Vehicle Titles

**Salvaged and Salvage Rebuilt**: Any repairs that exceed 75% of the vehicle's market value using NADA, Kelly Blue Book and various other publications.
When the insurance company has totaled the vehicle, and the customer has received the claim check, four things can happen:

- Insurance company can keep the vehicle.
- Customer can keep the vehicle. The customer is instructed to contact the local DMV inspector to have an initial inspection done, for vehicles 2001 to 2006 (these dates change yearly, example in 2007 the models will be 2002-2007).
- Affidavit of Rebuilder- The inspector lists each part that needs to be repaired.
- Final inspection- if all work is cleared and approved by the inspector then the rebuilt status is then removed (salvaged status remains).

**Note: Finance companies will not finance a salvaged vehicle.**

**Total Loss**: Repairs were more than the market value of the vehicle and the insurance company is unwilling to pay for the repairs.

**Total Loss/Rebuilt**: Whatever the repairs were to make the vehicle road worthy after a Total Loss status has been given. Vehicle must be 5 years old or older. Vehicle status then remains as salvaged or rebuilt.

**Certificate of Reconstruction**: When work has been done on (vehicles 2001-2006 in year 2006) this is issued when the inspector didn't see the original damaged and the vehicle has been repaired.

**Certificate of Destruction**: NC DMV will not register this type of vehicle. It is not fit for North Carolina roads.

**Custom Built**: When the customer has built this vehicle himself or herself. Ex. parts taken from various vehicles to build one vehicle. Three titles are required from the DMV in this case. 1) Frame 2) Transmission 3) Engine.
Then an indemnity bond must be issued. An indemnity bond must also be issued when the vehicle does not have a title at all.

**ORANGE COUNTY**
**BOARD OF COMMISSIONERS**
**ACTION AGENDA ITEM ABSTRACT**
**Meeting Date:** December 7, 2015

**Action Agenda Item No.** 6-c

**SUBJECT:** Property Tax Releases/Refunds

**DEPARTMENT:** Tax Administration

**PUBLIC HEARING: (Y/N)** No

**ATTACHMENT(S):**
Resolution
Releases/Refunds Data Spreadsheet

**INFORMATION CONTACT:**
Dwane Brinson, Tax Administrator,
(919) 245-2726

**PURPOSE:** To consider adoption of a resolution to release property tax values for eleven (11) taxpayers with a total of eleven (11) bills that will result in a reduction of revenue.

**BACKGROUND:** The Tax Administration Office has received nine taxpayer requests for release or refund of property taxes. North Carolina General Statute 105-381(b), "Action of Governing Body" provides that "upon receiving a taxpayer's written statement of defense and request for release or refund, the governing body of the Taxing Unit shall within 90 days after receipt of such a request determine whether the taxpayer has a valid defense to the tax imposed or any part thereof and shall either release or refund that portion of the amount that is determined to be in excess of the correct liability or notify the taxpayer in writing that no release or refund will be made". North Carolina law allows the Board to approve property tax refunds for the current and four previous fiscal years.

**FINANCIAL IMPACT:** Approval of this change will result in a net reduction in revenue of $28,580.12 to the County, municipalities, and special districts. The Tax Assessor recognized that refunds could impact the budget and accounted for these in the annual budget projections.

**SOCIAL JUSTICE IMPACT:** There is no Orange County Social Justice Goal impact associated with this item.

**RECOMMENDATION(S):** The Manager recommends the Board approve the attached resolution approving these property tax release/refund requests in accordance with North Carolina General Statute 105-381.

**NORTH CAROLINA** RES-2015-062

**ORANGE COUNTY**

**REFUND/RELEASE RESOLUTION (Approval)**

**Whereas,** North Carolina General Statutes 105-381 and/or 330.2(b) allows for the refund and/or release of taxes when the Board of County Commissioners determines that a taxpayer applying for the release/refund has a valid defense to the tax imposed; and

**Whereas,** the properties listed in each of the attached "Request for Property Tax Refund/Release" has been taxed and the tax has not been collected: and

**Whereas,** as to each of the properties listed in the Request for Property Tax Refund/Release, the taxpayer has timely applied in writing for a refund or release of the tax imposed and has presented a valid defense to the tax imposed as indicated on the Request for Property Tax Refund/Release.

**NOW, THEREFORE, IT IS RESOLVED BY THE BOARD OF COUNTY COMMISSIONERS OF ORANGE COUNTY THAT** the recommended property tax refund(s) and release(s) are approved.

Upon motion duly made and seconded, the foregoing resolution was passed by the following votes:

Ayes: Commissioners _____

_____

Noes: _____

I, Donna Baker, Clerk to the Board of Commissioners for the County of Orange, North Carolina, DO HEREBY CERTIFY that the foregoing has been carefully copied from the recorded minutes of the Board of Commissioners for said County at a regular meeting of said Board held on _____, said record having been made in the Minute Book of the minutes of said Board, and is a true copy of so much of said proceedings of said Board as relates in any way to the passage of the resolution described in said proceedings.

WITNESS my hand and the corporate seal of said County, this _____day of _____, 2015.

_____
Clerk to the Board of Commissioners

Clerical error G.S. 105-381(a)(1)(a)
Illegal tax G.S. 105-381(a)(1)(b)
Appraisal appeal G.S. 105-330.2(b)

# BOCC REPORT - REAL/PERSONAL
# DECEMBER 7, 2015

| NAME | ABSTRACT NUMBER | BILLING YEAR | ORIGINAL VALUE | ADJUSTED VALUE | FINANCIAL IMPACT | REASON FOR ADJUSTMENT |
|---|---|---|---|---|---|---|
| Bennett, G. Vann | 987771 | 2015 | 157,017 | 70,700 | (809.66) | Incorrect value (clerical error) |
| Clack, Bette Lee Walker | 1057975 | 2015 | 38,900 | - | (393.06) | Double billed (illegal tax) |
| Clifton, Kathy Kirkland | 1055119 | 2015 | 90,300 | 7,920 | (789.12) | Incorrect value (clerical error) |
| Criscito, Patricia K. | 1055461 | 2015 | 482,300 | 82,247 | (3,697.33) | Incorrect value (clerical error) |
| Dennehy, D. Michael | 220859 | 2015 | 924,458 | - | (10,967.77) | Incorrect value (clerical error) |
| Dennehy, Michael | 255094 | 2015 | 172,614 | - | (2,047.89) | Incorrect value (clerical error) |
| Green Beagle Lodge, LLC | 1055942 | 2015 | 69,049 | 4,377 | (695.38) | Listed In error (illegal tax) |
| Kirkland, Keith D. | 1055118 | 2015 | 820,800 | 95,511 | (6,947.54) | Incorrect value (clerical error) |
| Lynch, Karen Kirkland | 1055121 | 2015 | 107,600 | 22,907 | (811.27) | Incorrect value (clerical error) |
| Sharpe, Kay Kirkland | 1055120 | 2015 | 93,900 | 9,764 | (805.94) | Incorrect value (clerical error) |
| Stopford, Carolyn D. | 216641 | 2015 | 68,857 | 4,884 | (615.16) | Incorrect value (clerical error) |
| | | | | Total | (28,580.12) | |

**ORANGE COUNTY**
**BOARD OF COMMISSIONERS**
**ACTION AGENDA ITEM ABSTRACT**
**Meeting Date:** December 7, 2015

**Action Agenda Item No.** 6-d

**SUBJECT:** Applications for Property Tax Exemption/Exclusion

**DEPARTMENT:** Tax Administration

**PUBLIC HEARING: (Y/N)** No

**ATTACHMENT(S):**
Exempt Status Resolution
Spreadsheet
Requests for Exemption/Exclusion

**INFORMATION CONTACT:**
Dwane Brinson, Tax Administrator,
(919) 245-2726

**PURPOSE:** To consider ten (10) untimely applications for exemption/exclusion from ad valorem taxation for ten (10) bills for the 2015 tax year.

**BACKGROUND:** North Carolina General Statutes (NCGS) typically require applications for exemption to be filed during the listing period, which is usually during the month of January. Applications for Elderly/Disabled Exclusion, Circuit Breaker Tax Deferment and Disabled Veteran Exclusion should be filed by June 1st of the tax year for which the benefit is requested. NCGS 105-282.1(a1) does allow some discretion. Upon a showing of good cause by the applicant for failure to make a timely application, an application for exemption or exclusion filed after the close of the listing period may be approved by the Department of Revenue, the Board of Equalization and Review, the Board of County Commissioners, or the governing body of a municipality, as appropriate. An untimely application for exemption or exclusion approved under this provision applies only to property taxes levied by the county or municipality in the calendar year in which the untimely application is filed.

Including these ten (10) applications, the Board will have considered a total of forty (40) untimely applications for exemption of 2015 taxes since the 2015 Board of Equalization and Review adjourned on May 28th. Taxpayers may submit an untimely application for exemption of 2015 taxes to the Board of Commissioners through December 31, 2015.

Nine of the applicants are applying for homestead exclusion based on NCGS 105-277.1, which allows exclusion of the greater of twenty-five thousand dollars ($25,000) or fifty percent (50%) of the appraised value of the residence.

One of the applicants is applying for exclusion based on NCGS 105-277.1C, which allows for an exclusion of $45,000 for an honorably discharged Disabled American Veteran.

Based on the information supplied in the applications and based on the above-referenced General Statutes, the applications may be approved by the Board of County Commissioners. NCGS 105-282.1(a1) permits approval of such applications if good cause is demonstrated by the taxpayer.

**FINANCIAL IMPACT:** The reduction in the County's tax base associated with approval of the exemption application will result in a reduction of FY 2015/2016 taxes due to the County, municipalities, and special districts in the amount of $7,168.89.

**SOCIAL JUSTICE IMPACT:** There is no Orange County Social Justice Goal impact associated with this item.

**RECOMMENDATION(S):** The Manager recommends the Board approve the attached resolution for the above-listed applications for FY 2015/2016 exemption.

**NORTH CAROLINA** RES-2015-063

**ORANGE COUNTY**

**EXEMPTION/EXCLUSION RESOLUTION**

**Whereas**, North Carolina General Statutes 105-282.1 empowers the Board of County Commissioners to approve applications for exemption after the close of the listing period, and

**Whereas**, good cause has been shown as evidenced by the information packet provided, and

**Whereas**, the Tax Administrator has determined that the applicants could have been approved for 2014 had applications been timely.

**NOW, THEREFORE, IT IS RESOLVED BY THE BOARD OF COUNTY COMMISSIONERS OF ORANGE COUNTY THAT** the properties applying for exemption for 2014 are so approved as exempt.

Upon motion duly made and seconded, the foregoing resolution was passed by the following votes:

Ayes: Commissioners _____

_____

Noes: _____

I, Donna Baker, Clerk to the Board of Commissioners for the County of Orange, North Carolina, DO HEREBY CERTIFY that the foregoing has been carefully copied from the recorded minutes of the Board of Commissioners for said County at a regular meeting of said Board held on _____ said record having been made in the Minute Book of the minutes of said Board, and is a true copy of so much of said proceedings of said Board as relates in any way to the passage of the resolution described in said proceedings.

WITNESS my hand and the corporate seal of said County, this _____day of _____, 2015.

_____
Clerk to the Board of Commissioners

Late exemption/exclusion application - GS 105-282.1(a1)

# BOCC REPORT - REAL/PERSONAL
# DECEMBER 7, 2015

| NAME | ABSTRACT NUMBER | BILL YEAR | ORIGINAL VALUE | TAXABLE VALUE | FINANCIAL IMPACT | REASON FOR ADJUSTMENT |
|---|---|---|---|---|---|---|
| Alexander, Timothy D. | 208986 | 2015 | 214,414 | 116,810 | (938.56) | Late application for exemption G.S. 105-277.1 (Homestead Exemption) |
| Galloway, Linda | 175551 | 2015 | 108,767 | 54,383 | (522.95) | Late application for exemption G.S. 105-277.1 (Homestead Exemption) |
| McBride, Beverly | 251612 | 2015 | 93,358 | 46,679 | (448.87) | Late application for exemption G.S. 105-277.1 (Homestead Exemption) |
| McBroom, Nola | 219115 | 2015 | 130,025 | 67,162 | (604.49) | Late application for exemption G.S. 105-277.1 (Homestead Exemption) |
| Riley, John W. | 90202 | 2015 | 18,018 | 1,000 | (163.65) | Late application for exemption G.S. 105-277.1 (Homestead Exemption) |
| Sigmon, Laura Wagner | 254513 | 2015 | 92,459 | 83,213 | (144.05) | Late application for exemption G.S. 105-277.1 (Homestead Exemption) |
| Strayhorn, Michael W. | 230930 | 2015 | 306,007 | 153,003 | (2,383.80) | Late application for exemption G.S. 105-277.1 (Homestead Exemption) |
| Wade, William Thomas | 315672 | 2015 | 67,955 | 22,955 | (701.10) | Late application for exemption G.S. 105-277.1C (Veteran's Exemption) |
| Walker, Harold W. | 253967 | 2015 | 200,927 | 139,204 | (566.99) | Late application for exemption G.S. 105-277.1 (Homestead Exemption) |
| Worley, Vernon Rickey | 178344 | 2015 | 191,160 | 118,944 | (694.43) | Late application for exemption G.S. 105-277.1 (Homestead Exemption) |
| | | | | Total | (7,168.89) | |

Orange County
Tax Administration
NOV 11 2015
Taxpayer Exhibit_____

Request for Tax Relief
Late Application Filing

Date: Nov. 5, 2015

To Whom It May Concern:

I, (PRINT NAME) Timothy D. ALEXANDER, wish to be considered for Property Tax Relief Exemption or Exclusion for the year 2015 on Parcel Identification Number (PIN) # 9868237632.

In accordance with North Carolina General Statute 105-282.1(a1), I submit the reason(s) set forth below for consideration as demonstration of "good cause" for failure to make a timely application. An untimely application approved under G.S. 105-282.1(a1) applies only to property taxes levied by the county or municipality in the calendar year in which the untimely application is filed.

____ I was not aware that this exemption was available to me.
____ I just found out about the Property Tax Relief Program.
X Other (please explain)

I had asked for forms with last property tax billing of 2014 but was never sent the forms. On getting New 2015 billing I again requested forms but this time by phone.

Thank you,

(Signature)

How did you learn of this exemption?

On the back of my property tax bill.

Orange County
Tax Administration
OCT 15 2015
Taxpayer Exhibit _____

# Request for Tax Relief
## Late Application Filing

Date: 9-15-15

To Whom It May Concern:

I, (PRINT NAME) Linda Galloway, wish to be considered for Property Tax Relief Exemption or Exclusion for the year 2015 on Parcel Identification Number (PIN) # 9863004568.

In accordance with North Carolina General Statute 105-282.1(a1), I submit the reason(s) set forth below for consideration as demonstration of "good cause" for failure to make a timely application. An untimely application approved under G.S. 105-282.1(a1) applies only to property taxes levied by the county or municipality in the calendar year in which the untimely application is filed.

____ I was not aware that this exemption was available to me.
____ I just found out about the Property Tax Relief Program.
✓ Other (please explain)

Years & Years ago checked into this. Made to much money
Was talking with an old friend who said to go apply
because they will help now that husband can't find work.
We paid last year and was hard to do. This year
is going to be almost impossible
Husband is continually trying
to find work.

Thank you,

(Signature) Linda L. Galloway

How did you learn of this exemption?

Friend -

Thank you very much for considering
my application. I did not know it
was late. Young Lady who gave me
app said I wasn't late but to
hurry to get it filed.

# Request for Tax Relief
# Late Application Filing

FILED
SEP 22 2015
ORANGE CO TAX OFFICE

Date: 9-16-15

To Whom It May Concern:

I, (PRINT NAME) Beverly McBride, wish to be considered for Property Tax Relief Exemption or Exclusion for the year 2015 on Parcel Identification Number (PIN) # 9874752523.

In accordance with North Carolina General Statute 105-282.1(a1), I submit the reason(s) set forth below for consideration as demonstration of "good cause" for failure to make a timely application. An untimely application approved under G.S. 105-282.1(a1) applies only to property taxes levied by the county or municipality in the calendar year in which the untimely application is filed.

✓ I was not aware that this exemption was available to me.
✓ I just found out about the Property Tax Relief Program.
____ Other (please explain)

Thank you,

Beverly McBride
(Signature)

How did you learn of this exemption?

From a friend

FILED
NOV 12 2015
ORANGE CO TAX OFFICE

# Request for Tax Relief
## Late Application Filing

Date: November 5, 2015

To Whom It May Concern:

I, (PRINT NAME) Nola K McBroom, wish to be considered for Property Tax Relief Exemption or Exclusion for the year 2015 on Parcel Identification Number (PIN) # 9867968237.

In accordance with North Carolina General Statute 105-282.1(a1), I submit the reason(s) set forth below for consideration as demonstration of "good cause" for failure to make a timely application. An untimely application approved under G.S. 105-282.1(a1) applies only to property taxes levied by the county or municipality in the calendar year in which the untimely application is filed.

____ I was not aware that this exemption was available to me.
✓ I just found out about the Property Tax Relief Program.
____ Other (please explain)

Thank you,

Nola K McBroom
(Signature)

How did you learn of this exemption?

From family

FILED
AUG 31 2015
ORANGE CO TAX OFFICE

# Request for Tax Relief
## Late Application Filing

Date: 8/31/2015

To Whom It May Concern:

I, (PRINT NAME) John W. Riley, wish to be considered for Property Tax Relief Exemption or Exclusion for the year 2015 on Parcel Identification Number (PIN) # 9865750435.

In accordance with North Carolina General Statute 105-282.1(a1), I submit the reason(s) set forth below for consideration as demonstration of "good cause" for failure to make a timely application. An untimely application approved under G.S. 105-282.1(a1) applies only to property taxes levied by the county or municipality in the calendar year in which the untimely application is filed.

____ I was not aware that this exemption was available to me.
✓ I just found out about the Property Tax Relief Program.
____ Other (please explain)

Thank you,

John W. Riley
(Signature)

How did you learn of this exemption?

FILED
JUN 16 2015
ORANGE COUNTY
TAX ADMINISTRATION

FILED
JUN 16 2015
ORANGE COUNTY
TAX ADMINISTRATION

# Request for Tax Relief
# Late Application Filing

Date: 6.16.15

To Whom It May Concern:

I, (PRINT NAME) Laura Wagner, wish to be considered for Property Tax Relief Exemption or Exclusion for the year 2015 on Parcel Identification Number (PIN) # 9864543851.

In accordance with North Carolina General Statute 105-282.1(a1), I submit the reason(s) set forth below for consideration as demonstration of "good cause" for failure to make a timely application. An untimely application approved under G.S. 105-282.1(a1) applies only to property taxes levied by the county or municipality in the calendar year in which the untimely application is filed.

____ I was not aware that this exemption was available to me.
____ I just found out about the Property Tax Relief Program.
✓ Other (please explain)

Was not aware that I had to reapply

Thank you,

Laura T Wagner
(Signature)

How did you learn of this exemption?

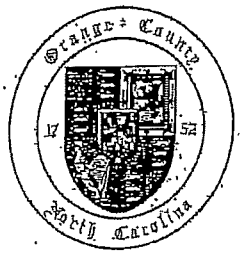


FILED
OCT 20 2015
ORANGE CO TAX OFFICE

# Request for Tax Relief
## Late Application Filing

Date: 10-14-15

To Whom It May Concern:

I, (PRINT NAME) MICHAEL W. STRAYHORN, wish to be considered for Property Tax Relief Exemption or Exclusion for the year 2015 on Parcel Identification Number (PIN) # 9874172955.

In accordance with North Carolina General Statute 105-282.1(a1), I submit the reason(s) set forth below for consideration as demonstration of "good cause" for failure to make a timely application. An untimely application approved under G.S. 105-282.1(a1) applies only to property taxes levied by the county or municipality in the calendar year in which the untimely application is filed.

____ I was not aware that this exemption was available to me.
✓ I just found out about the Property Tax Relief Program.
____ Other (please explain)

_____

_____

Thank you,

Michael W. Strayhorn
(Signature)

How did you learn of this exemption?

_____

FILED
OCT 20 2015
ORANGE CO TAX OFFICE

# Request for Tax Relief
## Late Application Filing

Date: 10-16-2015

To Whom It May Concern:

I, (PRINT NAME) William Thomas Wade, wish to be considered for Property Tax Relief Exemption or Exclusion for the year 2015 on Parcel Identification Number (PIN) # 9865526202.

In accordance with North Carolina General Statute 105-282.1(a1), I submit the reason(s) set forth below for consideration as demonstration of "good cause" for failure to make a timely application. An untimely application approved under G.S. 105-282.1(a1) applies only to property taxes levied by the county or municipality in the calendar year in which the untimely application is filed.

___ I was not aware that this exemption was available to me.
✓ I just found out about the Property Tax Relief Program.
___ Other (please explain)

Thank you,

William Thomas Wade
(Signature)

How did you learn of this exemption?

FILED
OCT 20 2015
ORANGE CO TAX OFFICE

# Request for Tax Relief
## Late Application Filing

Date: 10-15-15

To Whom It May Concern:

I, (PRINT NAME) Harold W Walker, wish to be considered for Property Tax Relief Exemption or Exclusion for the year 2015. on Parcel Identification Number (PIN) # 989775190.

In accordance with North Carolina General Statute 105-282.1(a1), I submit the reason(s) set forth below for consideration as demonstration of "good cause" for failure to make a timely application. An untimely application approved under G.S. 105-282.1(a1) applies only to property taxes levied by the county or municipality in the calendar year in which the untimely application is filed.

____ I was not aware that this exemption was available to me.
✓ I just found out about the Property Tax Relief Program.
____ Other (please explain)

_____

_____

Thank you,

Harold W Walker
(Signature)

How did you learn of this exemption?

_____

FILED
OCT 14 2015
ORANGE CO TAX OFFICE

# Request for Tax Relief
## Late Application Filing

Date: 10-13-15

To Whom It May Concern:

I, (PRINT NAME) Vernon Ricky Worley, wish to be considered for Property Tax Relief Exemption or Exclusion for the year 2015 on Parcel Identification Number (PIN) # 9749177125.

In accordance with North Carolina General Statute 105-282.1(a1), I submit the reason(s) set forth below for consideration as demonstration of "good cause" for failure to make a timely application. An untimely application approved under G.S. 105-282.1(a1) applies only to property taxes levied by the county or municipality in the calendar year in which the untimely application is filed.

____ I was not aware that this exemption was available to me.
X I just found out about the Property Tax Relief Program.
____ Other (please explain)

Thank you,

Vernon Ricky Worley
(Signature)

How did you learn of this exemption?

A family friend.

**ORANGE COUNTY**
**BOARD OF COMMISSIONERS**

**ACTION AGENDA ITEM ABSTRACT**
**Meeting Date:** December 7, 2015

**Action Agenda Item No.** 6-e

**SUBJECT:** Amendment to the Orange County Code of Ordinances Regarding Agricultural Preservation Board

**DEPARTMENT:** County Attorney **PUBLIC HEARING: (Y/N)** No

**ATTACHMENT(S):**
1) DRAFT-Chapter 48 Section
2) Adopting Resolution

**INFORMATION CONTACT:**
John Roberts, County Attorney, 245-2318

**PURPOSE:** To consider amending the Orange County Code of Ordinances related to the Agricultural Preservation Board.

**BACKGROUND:** Orange County, through Chapter 48 of the Code of Ordinances, regulates and maintains agricultural preservation activities in Orange County. This amendment adds one at-large member to the Agricultural Preservation Board and specifies that the Agricultural Preservation Board is subject to the Orange County Board of Commissioners Advisory Board policy and associated board-specific policy document.

**FINANCIAL IMPACT:** There is no financial impact to the County associated with the amendment of the Code of Ordinances.

**SOCIAL JUSTICE IMPACT:** There is no Orange County Social Justice Goal impact associated with this item.

**RECOMMENDATION(S):** The Manager recommends that the Board:
1) Adopt and authorize the Chair to sign the Resolution Amending Chapter 48 of the Code of Ordinances of Orange County; and
2) Authorize staff to make any typographical or other non-substantive corrections as may be needed prior to and during the process of submission of the amended ordinance to Municode.

# Proposed VFPP Ordinance Revision Language for Sec. 48-7 and 48-9:

- **Sec. 48-5. - Agricultural preservation board.**

(a)

*Creation.* An Orange County Agricultural Preservation Board, consisting of seven initial members appointed by the Board of County Commissioners, is hereby established. The Agricultural Preservation Board shall consist of up to ~~seven~~ eight at-large members plus one member from each Agricultural District Region created and existing under this Ordinance, with members selected from Certified Qualifying Farms within Voluntary and Enhanced Voluntary Agricultural Districts, appointed by the Board of County Commissioners. Additional appointments may be made to satisfy the requirements of subsection 48-5(b)(1)(b) of this Ordinance. In addition to the requirements of this Ordinance and applicable North Carolina General Statutes the Board is and shall remain subject to the requirements of the Orange County Board of Commissioners Advisory Board Policy and the Agricultural Preservation Board Policies and Procedures. In the event of a conflict between the terms of this Ordinance and said policies the terms of said policies shall control.

(Ord. of 03-24-1992, Art. V, eff. 04-01-1992; Amend. of 04-17-2000, eff. 04-17-2000; Amend. of 06-23-2005, eff. 06-23-2005; Amend. of 04-20-2010, eff. 04-20-2010)

RES-2015-064 Attachment 2

**RESOLUTION OF AMENDMENT**

**A RESOLUTION AMENDING CHAPTER 48, VOLUNTARY FARMLAND PROTECTION PROGRAM, OF THE ORANGE COUNTY CODE OF ORDINANCES**

Be it Resolved by the Board of Commissioners of Orange County, North Carolina:

WHEREAS, Orange County, through ordinance, has provided for a program to encourage the protection of farmland in Orange County; and

WHEREAS, the Orange County Board of Commissioners believes it to be in the best interest of Orange County residents to amend the Code of Ordinances regarding the Voluntary Farmland Protection Program to add an at-large board position and to clarify associated requirements of the Agricultural Preservation Board.

NOW THEREFORE, the Orange County Board of Commissioners hereby amends Chapter 48, Section 48-5(a) as reflected in the attachment.

This Amendment shall become effective upon adoption.

Adopted by the Orange County Board of Commissioners this 7th day of December, 2015.

By: Attest:

_____ _____

Chair
Orange County Board of Commissioners

Donna Baker, Clerk to the Board

[SEAL]

**ORANGE COUNTY**
**BOARD OF COMMISSIONERS**
**ACTION AGENDA ITEM ABSTRACT**
**Meeting Date:** December 7, 2015

**Action Agenda Item No.** 6-f

**SUBJECT:** Amendment to the Orange County Code of Ordinances Regarding Massage Regulation

**DEPARTMENT:** County Attorney
Tax Administration

**PUBLIC HEARING: (Y/N)** No

**ATTACHMENT(S):**
1) DRAFT-Chapter 8 Article II Sections
2) Adopting Resolution

**INFORMATION CONTACT:**
John Roberts, County Attorney, 245-2318
Dwane Brinson, Tax Administrator, 245-2726

**PURPOSE:** To consider amending the Orange County Code of Ordinances related to the regulation of massage practitioners and businesses.

**BACKGROUND:** Orange County, through Chapter 8, Article II of the Code of Ordinances, regulates the provision of massage services in Orange County. Throughout the ordinance references are made to privilege license fees and taxes as being those fees required to be paid prior to providing massage services in Orange County. This language was adopted many years ago and was satisfactory at the time of its adoption even though the fees are regulatory license fees rather than privilege license fees.

In 2015 the North Carolina General Assembly repealed the authority of counties to levy privilege license fees. This creates a need for clarification in the ordinance to specify that these license fees are lawful and are regulatory in nature and are not true privilege fees.

In addition to the clarification the proposed amendment removes the requirement that the Sheriff conduct a Division of Criminal Investigation ("DCI") criminal background check on applicants. This is necessary due to new DCI restrictions on the Sheriff's use of the service.

Finally, in anticipation of a Unified Development Ordinance amendment regulating the siting and location of sexually oriented businesses in Orange County, the proposed amendment adds applicants and potential employees of such businesses to the licensing requirements.

**FINANCIAL IMPACT:** There is no financial impact to the County associated with the amendment to the Code of Ordinances.

**SOCIAL JUSTICE IMPACT:** There is no Orange County Social Justice Goal impact associated with this item.

**RECOMMENDATION(S):** The Manager recommends that the Board:
1) Adopt and authorize the Chair to sign the Resolution Amending Chapter 8, Article II of the Code of Ordinances of Orange County; and
2) Authorize staff to make any typographical or other non-substantive corrections as may be needed prior to and during the process of submission of the amended ordinance to Municode.

- # ARTICLE II. - MASSAGES AND MASSAGE ESTABLISHMENTS

- ## Sec. 8-32. - Scope.

(a)

The therapeutic application of massage is one of the oldest healing arts known to humankind; a practice which can provide many benefits to an individual's state of well-being. ~~To~~ Pursuant to the authority granted to counties by North Carolina General Statute § 153A-134 and to protect public health, safety, welfare, and morals, the following ~~privilege~~ regulatory license provisions and regulations are ordained for ~~the privilege of~~ carrying on the business, trade, or profession of massage practitioner and for the operation or carrying on of the businesses, trades, or professions commonly known as massage clinic, massage parlor, health salon, health club, physical culture studio, or similar establishment wherein massage or physical manipulation of the human body is carried on or practiced. All of the requirements of this Article shall apply to sexually oriented businesses and employees of such businesses as those businesses and employees of such businesses are defined by the Orange County Code of Technical Ordinances except those which by their nature can have no application.

(b)

The provisions of this Ordinance shall not apply to:

(1)

Regularly established and licensed hospital, sanitarium, nursing home, nor to an office or clinic operated and regularly used by a duly licensed physician, surgeon, osteopath, chiropractor, physical therapist or podiatrist in connection with the practice of medicine, chiropractor, osteopathy, physical therapy or podiatry;

(2)

Physicians, surgeons, chiropractors, osteopaths, physical therapists or podiatrists duly licensed by the State of North Carolina;

(3)

Registered or practical nurses duly licensed by the State of North Carolina working under the supervision of a licensed physician, chiropractor, osteopath or podiatrist;

(4)

Cosmetologist, barbers or beauty culturists duly licensed by the State of North Carolina who do not give, or hold themselves out to give massages other than are customarily given in barber shops and beauty shops solely for the purpose of beautification.

*(Ord. of 11-4-1985, § 1-2, eff. 11-4-1985; Amend. of 06-19-2012, eff. 06-19-2012)*

- **Sec. 8-33. - Licensing of massage business operators.**

(a)

No person shall operate a massage business unless such person shall have first applied for and received the license provided by this section. A license issued pursuant to this section is a ~~privilege~~ regulatory license issued under the authority of the Orange County Board of County Commissioners by the Orange County Sheriff to the applicant only and is not transferable.

(b)

Every application for the ~~privilege~~ license prescribed in this section shall be upon a form approved by the Orange County Sheriff and shall be filed with the Orange County Sheriff. Every such application shall be made under oath and shall contain the following information:

(1)

If the applicant is:

a.

A person, the name of the applicant, any aliases ever used by the applicant, the age, the sex, social security number (optional) and past military identification number of the applicant; the residence address of the applicant and the residence addresses of the applicant for the ten years preceding the date of the application.

b.

A partnership, corporation or association, the name, any aliases ever used, sex, social security number (optional) and past military identification number, the residence address and the residence addresses for the ten years preceding the date of the application regarding each person having any legal or beneficial interest in such applicant.

(2)

The address of the premises where the massage business shall be located;

(3)

A complete statement of all convictions of any person whose name is required to be given in subsection 8-33(b), any federal statute relating to prostitution, or any law or ordinance of any governmental unit concerning the business of massage. The statement shall list convictions for all crimes including but not limited to any crime involving sexual misconduct and offenses pursuant to G.S. §§ 14-177—14-202.6 and §§ 14-203—14-208;

(4)

A complete statement of any revocation, by any governmental unit, of any license and the existence of any license to operate a massage business or to engage in the business or profession of massage held or formerly held by any person whose name is required to be given in subsection 8-33(b)(1);

(5)

A complete statement of any conviction of any person whose name is required to be given in subsection 8-33(b)(1) for violation of any statute, law, ordinance or regulation of any government concerning the operation of a massage business or the business or profession of massage;

(6)

The name and address of any massage business or other establishment owned or operated by any person whose name is required to be given in subsection 8-33(b)(1) of this section wherein the business or profession of massage is carried on; and

(7)

A description of any other business to be operated on the same premises or on adjoining premises owned or controlled by the applicant.

(c)

In addition to the application required in subsection 8-33(b) the applicant shall submit, at the applicant's cost, his or her fingerprints, taken by the Sheriff and a certified criminal background check covering the immediately preceding five (5) year period for all locations in which the applicant has temporarily or permanently resided. ~~Upon receipt of an application, the Sheriff shall conduct a Division of Criminal Investigation ("DCI") criminal history check of the applicant.~~ The Sheriff shall ~~also~~ transmit a copy of the application to the Department of Planning and Inspections to determine compliance with all zoning and building regulations and ordinances. The Sheriff in cooperation with the respective fire district chief shall determine compliance with any law relating to fire protection.

(d)

The application shall be approved if the Sheriff ~~shall approve the application if he~~ determines that:

(1)

The application contains no misstatement of fact;

(2)

The applicant, or any person having any legal or beneficial ownership interest in the applicant, has not been convicted, for the five-year period preceding the date of the application, of any crime listed in subsection 8-33(b)(3);

(3)

The applicant conforms to all requirements of applicable zoning, building and fire prevention codes; and

(4)

The applicant or any person having a legal or beneficial interest in the applicant has not, for the three-year period preceding the application, had a previously issued license for engaging in the business or profession of massage revoked.

(e)

Upon approval of the application by the Sheriff, and upon receipt of a license fee set from time to time, the collector of revenue shall issue a ~~privilege~~ license to the applicant. Permit approval shall lapse if the license fee prescribed by this section is not received by the collector of revenue within 60 days of the date the application is approved.

(f)

A license issued pursuant to this section shall be revoked by action of the Sheriff ~~if he determines~~upon the Sheriff's determination that:

(1)

The licensee has violated any provisions of this article;

(2)

The licensee, or any agent of the licensee, employs or permits to be on the premises of the applicant's massage business any person practicing the business or profession of massage who has not been issued a ~~privilege~~ license required by Section 8-33 or whose license under Section 8-33 has been revoked;

(3)

The licensee, or the legal or beneficial owner of any interest in the licensee, is, after the license under this section is issued, convicted of any crime listed in subsection 8-33(b)(3);

(4)

Any employee of the licensee is, after the license under this section is issued, convicted of any crime listed in subsection 8-33(b)(3);

(5)

The licensee violates any zoning, building or fire prevention ordinance; or

(6)

The licensee is guilty of fraudulent, false, misleading or deceptive advertising, including the use of the term "massage" to describe, promote or advertise any type of business activity or service prohibited by this article or is not massage as defined in this article.

(g)

A license issued pursuant to this section shall be revoked by the Sheriff if the licensee ceases for 30 consecutive days operating a massage business at the location required to be stated in the application for license pursuant to subsection 8-33(b)(2).

(h)

Any person whose application for a license is denied by the Sheriff pursuant to subsection 8-33(b)(d) of this section or revoked pursuant to subsection 8-33(f) or subsection 8-33(g) of this section may appeal such decision to the Board of County Commissioners. An appeal is taken by filing written notice of such

appeal with the Clerk to the Board of County Commissioners within ten days following the date of the decision. The Board of Commissioners shall set the appeal for hearing in the manner provided by Section 8-37. The Board of County Commissioners may affirm, modify or reverse the Sheriff's decision.

*(Ord. of 11-4-1985, § 1-3, eff. 11-4-1985; Amend. of 3-20-1991, eff. 3-20-1991; Amend. of 8-18-2009, eff. 8-18-2009; Amend. of 06-19-2012, eff. 06-19-2012)*

- **Sec. 8-34. - Licensing of massage practitioners.**

(a)

No person shall engage in the business or profession of massage unless such person shall have first applied for and received the license provided by this section. A license issued pursuant to this section is a ~~privilege~~ regulatory license issued to the applicant only and is not transferable.

(b)

The application for the license required by this section shall be upon a form approved by the Sheriff and shall be filed with the Sheriff. Such application shall be given under oath and shall contain the following information:

(1)

The name of the applicant, any aliases ever used by the applicant, the age, the sex, Social Security Number (optional) and past military identification number of the applicant; the residence address of the applicant and the residence addresses of the applicant for the ten years preceding the date of the application;

(2)

A complete statement of the previous business or occupation of the applicant for the two years immediately preceding the date of application, including any massage establishment experience;

(3)

A complete statement of all convictions of the applicant for any crime listed in subsection 8-33(b)(3);

(4)

A complete statement of any revocation of any license granted by any governmental unit to the applicant to engage in the business or profession of massage; and

(5)

The date and place of the applicant's birth and the names of the applicant's parents.

(c)

The applicant shall submit, as part of the application required in subsection 8-34(b), two recent photographs of the applicant's head and shoulders, of a size and quality prescribed by the Sheriff. The applicant shall additionally submit, at his or her cost, his or her fingerprints, taken by the Sheriff, and a certified criminal background check covering the immediately preceding five (5) year period for all locations in which the applicant has temporarily or permanently resided as part of the application required in subsection 8-34(b). The applicant shall further submit a copy of his or her license or certification issued

to the applicant by the North Carolina Board of Massage and Bodywork Therapy. The photographs, license or certification, and fingerprints required by this subsection shall be provided at the applicant's expense, according to the fees for such activities as they may be from time to time established and payable in the manner established.

(d)

An application in proper form shall be submitted to the Sheriff together with all reports, documents, photographs, and fingerprints required by this section. Fingerprints collected pursuant to this section or section 8-33 shall not be provided to U.S. Immigration and Customs Enforcement or used in conjunction with any U.S. Immigration and Customs Enforcement action. The Sheriff shall conduct an investigation of the applicant as provided herein. The application shall be approved if the Sheriff ~~shall approve such application if he~~ determines:

(1)

That the applicant is at least 18 years of age;

(2)

The application contains no misstatement of fact;

(3)

The applicant has not been convicted, for the five-year period preceding the date of the application, of any crime listed in subsection 8-33(b)(3);

(4)

The applicant has not, for the three-year period preceding the application, had a previously issued license for engaging in the business or profession of massage revoked;

(5)

The applicant has not been previously convicted of any violation of any provision of this article; and

(6)

The applicant is duly licensed and/or certified by the North Carolina Board of Massage and Bodywork Therapy.

(e)

Upon approval of the application by the Sheriff, and upon receipt of a license fee and any other fees as those fees are set from time to time, subject, however, to the provisions of Section 8-41, the collector of revenue shall issue a ~~privilege~~ license to the applicant. Permit approval shall lapse if the license fee prescribed by this section is not received by the collector of revenue within 60 days of the date the application is approved.

(f)

A license issued pursuant to this section shall be revoked by action of the Sheriff if ~~he~~ the Sheriff determines that:

(1)

The licensee has violated any provision of this article;

(2)

The licensee is, after the license under this section is issued, convicted of any crime listed in subsection 8-33(b)(3); or

(3)

The licensee is guilty of fraudulent, false, misleading or deceptive advertising, including the use of the term "massage" to describe, promote or advertise any type of business activity or service prohibited by this article or is not massage as defined in this article.

(g)

Any person whose application for a license is denied by the Sheriff pursuant to subsection 8-34(d) or revoked pursuant to subsection 8-34(f) may appeal such decisions to the Board of County Commissioners. An appeal is taken by filing written notice of such appeal with the Clerk to the Board of County Commissioners within ten days following the date of the decision. The Board of County Commissioners shall set the appeal for hearing in the manner provided by Section 8-37. The Board of Commissioners may affirm, modify or reverse the Sheriff's decision.

*(Ord. of 11-4-1985, § 1-4, eff. 11-4-1985; Amend. of 3-20-1991, eff. 3-20-1991; Amend. of 06-19-2012, eff. 06-19-2012)*

- **Sec. 8-41. - ~~Privilege license~~ ~~annual~~Annual License.**

(a)

The licenses required under this Ordinance are annual ~~privilege~~ licenses. The annual ~~privilege~~ license fee for the second and subsequent years of continuous operation of a massage business shall be $15.00. The annual ~~privilege~~ license fee for the second and subsequent years of continuous practice of a massage practitioner shall be $10.00. A massage practitioner who is a sole practitioner and who is not employed as a massage practitioner by a massage business operates a massage business and shall be required to be licensed as both a massage business and a massage practitioner. However, such a sole practitioner shall only be required to pay the ~~privilege~~ license fee prescribed herein for a massage business.

(b)

Fees for the licenses shall be due and payable in the same manner as prescribed for other ~~privilege~~ license fees of Orange County ~~pursuant to the license and privilege tax ordinance of the County~~and may be collected in any manner authorized by law.

*(Ord. of 11-4-1985, § 1-11, eff. 11-4-1985)*

**RESOLUTION OF AMENDMENT**

**A RESOLUTION AMENDING CHAPTER 8, ARTICLE II OF THE ORANGE COUNTY CODE OF ORDINANCES**

Be it Resolved by the Board of Commissioners of Orange County, North Carolina:

WHEREAS, Orange County, through ordinance, has since 1985 regulated the provision of massage services throughout the unincorporated areas of Orange County and has collected a fee therefor; and

WHEREAS, in 2015 the North Carolina legislature repealed the authority of counties to levy privilege license taxes and fees; and

WHEREAS, although the massage license fee was called a privilege tax or privilege fee the authority for imposition and collection of the massage license fee is derived from the county's regulatory authority rather than its now repealed privilege tax authority; and

WHEREAS, the Orange County Board of Commissioners, believing it to be in the best interest of the citizens and residents of Orange County to clarify the ordinance, hereby determines that the operation of massage businesses and sexually oriented businesses should be conducted in Orange County only according to those certain regulations and requirements found in Chapter 8, Article II of the Orange County Code of Ordinances as amended.

NOW THEREFORE, the Orange County Board of Commissioners hereby amends Chapter 8, Article II, as shown in the attachment to further regulate the provision of massage services by massage practitioners and massage businesses and sexually oriented businesses.

This Amendment shall become effective upon adoption.

Adopted by the Orange County Board of Commissioners this _____ day of _____, 2015.

By: Attest:

_____ _____

Chair
Orange County Board of Commissioners

Donna Baker, Clerk to the Board

[SEAL]

**ORANGE COUNTY**
**BOARD OF COMMISSIONERS**

**ACTION AGENDA ITEM ABSTRACT**
**Meeting Date:** December 7, 2015

**Action Agenda**
**Item No.** 6-g

**SUBJECT:** Memorandum of Agreement Renewal – Fairview Park

**DEPARTMENT:** County Manager, DEAPR **PUBLIC HEARING: (Y/N)** No

**ATTACHMENT(S):**
Current MOA – Strikethrough
New Draft MOA – Clean
Map of Fairview Park

**INFORMATION CONTACT:**
Travis Myren, 245-2300
David Stancil, 245-2510

**PURPOSE:** To consider renewal, with minor changes, of a Memorandum of Agreement between the County and Town of Hillsborough for Fairview Park Operations and Responsibilities.

**BACKGROUND:** Fairview Park was constructed and opened in 2011. The park was built on land owned by the County and Town of Hillsborough (now owned by the County). A Memorandum of Agreement (MOA) was developed and approved by the County and Town Boards of Commissioners in December 2010 to govern certain operations and responsibilities for the park. This agreement expires on December 31, 2015, but anticipates renewal by the parties.

A revised MOA has been developed by County and Town staff, including representatives from the Sheriff's Department and the Town Police Department regarding coordination on public safety provision at the park. The new MOA continues the prior collaborative arrangement between the two departments. The Town also will continue to provide water and sewer service to the park, and handle opening and closing of gates to the park.

The new agreement would continue this arrangement through the year 2020, and be renewable by the parties. The Hillsborough Board of Commissioners will consider this MOA on December 14, 2015.

**FINANCIAL IMPACT:** There is no financial impact associated with the approval of the MOA, as it continues current operational and financial arrangements.

**SOCIAL JUSTICE IMPACT:** The following Orange County Social Justice Goals are applicable to this agenda item:

- **GOAL: FOSTER A COMMUNITY CULTURE THAT REJECTS OPPRESSION AND INEQUITY**

The fair treatment and meaningful involvement of all people regardless of race or color; religious or philosophical beliefs; sex, gender or sexual orientation; national origin or ethnic background; age; military service; disability; and familial, residential or economic status.

- **GOAL: CREATE A SAFE COMMUNITY**
  The reduction of risks from vehicle/traffic accidents, childhood and senior injuries, gang activity, substance abuse and domestic violence.

Fairview Park offers recreational and healthy lifestyle opportunities for the Fairview community, and programs and recreational activities are offered which provide team and individual athletic activity and exercise options. Fairview Park also helps provide for a safe community by offering opportunities for healthy outdoor activity in a park setting for area children, reducing the risk of vehicles/traffic accidents by play in streets and gang activity, among other positive impacts.

**RECOMMENDATION(S):** The Manager recommends that the Board approve and authorize the Chair to sign the revised MOA for Fairview Park.

~~ADOPTED~~

**MEMORANDUM OF INTERLOCAL AGREEMENT**

**ORANGE COUNTY, NC**
**TOWN OF HILLSBOROUGH, NC**

**REGARDING FAIRVIEW PARK OPERATIONS AND RESPONSIBILITIES**

THIS AGREEMENT, made and entered into between the Town of Hillsborough, North Carolina, a North Carolina municipal corporation, 101 East Orange Street, Hillsborough, NC 27278 (hereinafter referred to as the "Town"); and Orange County, a body politic and corporate, a political subdivision of the State of North Carolina, 200 South Cameron Street, Hillsborough, NC 27278 (hereinafter referred to as the "County"), for the joint and/or assigned operations and responsibilities of Fairview Park, located in Hillsborough, NC.

WITNESSETH

WHEREAS, the parties to this agreement are public bodies, politic and corporate, under the laws of the State of North Carolina and are vested with the power and authority to own and improve real estate for recreational and other public purposes; and

WHEREAS, the Fairview neighborhood of the Town of Hillsborough adjoins a designated park site that was identified as part of the Community Revitalization effort funded through Community Development Block Grants in the 1980s, and identified in both the County and Town Comprehensive Plans; and

WHEREAS, the 2001 Orange County Parks and Open Space Bond included funding for planning and construction of Fairview Park; and

WHEREAS, the Town and County both own property within the said Fairview Park site (hereinafter "Fairview Park"), and the Town's corporate limits abut the site on three sides; and

WHEREAS, the County and Town recognized the mutual benefit and interest of the parties hereto, and to the public generally, in the construction of park facilities on Town and County owned property for Fairview Park, with the Town agreeing to donate its land toward this purpose; and

WHEREAS, the Town and County entered into a Memorandum of Agreement in 2004 regarding use of both Town and County lands together for Fairview Park, and a process for creating a master plan for the park, as shown as Attachment 1 to this Agreement; and

DRAFT

~~ADOPTED~~

WHEREAS, it is recognized by both parties that there are limitations imposed by safety considerations caused by the site's previous use for waste-disposal purposes, as addressed in part by a geo-technical report ("Report of Geotechnical Evaluation, Closed Hillsborough Landfill Site, July 19, 2000") that have affected the potential locations within the site for a park; and

WHEREAS, a Fairview Park Master Plan was created by a committee of County and Town representatives in 2006 and was subsequently adopted by both the Town and County Boards of Commissioners; and

WHEREAS, the County and Town jointly applied for and received grant funding for park construction from the N.C. Parks and Recreation Trust Fund in 2009; and

~~WHEREAS, the laws of the State of North Carolina provide that the parties hereto may contract, for the joint design, construction, development and use of facilities for the stated public purposes; and~~

WHEREAS, Fairview Park was constructed in 2010, with a signed interlocal agreement dated November 16, 2010 to ~~construction of park facilities began in early 2010 upon awarding of a construction bid following open bid solicitation procedures, and is currently underway located on both Town and County-owned portions of the site; and~~

~~WHEREAS, the parties hereto agree to~~ address needed property exchanges for public safety and liability concerns, Town contributions to park operations and potential annexation into the Town of Hillsborough, among other matters; and

WHEREAS the parties wish to continue certain arrangements regarding the operation and responsibilities of the park:

**NOW, THEREFORE**, in consideration of the foregoing and on mutual promises and obligations set forth herein, the receipt and sufficiency of which is hereby acknowledged, the parties agree as follows:

~~**1. PROPERTY EXCHANGES AND ACCESS EASEMENTS**~~

~~a. In order to address potential liability issues and simplify ownership boundaries which find facilities located on or across property lines, the Town and County agree to an exchange of properties within the Fairview Park site (please see Map 1-a and 1-b).~~

~~i. The County will convey to the Town approximately one (1) acre of land along Rainey Avenue including the existing Town of Hillsborough Police Department, Fairview Substation and its adjoining parking area, as shown in Map 1-b.~~

DRAFT

~~ADOPTED~~

~~ii. The Town will convey to the County its portion of land containing the facilities for Fairview Park, along with a connecting strip of land as shown in Map 1-b.~~

~~iii. Three easements will be executed as part of this land swap:~~

~~1. The County will grant an access easement to the Town for use of its private road serving the County's Public Works facility to NC 86.~~

~~2. The County will grant an unspecified easement to the Town to cross the County's property to access the Town's storm debris site as shown on Map 1-b.~~

~~3. A third one, from Town to the general public and Orange County specifically for use of and access across the substation parking lot (for access to the remainder of the park)~~

~~iv.~~ i. ~~The Town and County will share the costs of surveys for these land conveyances, and will be responsible for their own legal expenses related to same.~~

## 2. TOWN CONTRIBUTIONS TO OPERATING EXPENSES

a. The Town will provide for water and sewer service at no cost to the park restrooms, picnic shelter and water fountains.
b. The Town will be responsible for the opening and closing of any gate to the park, if such is deemed necessary, on a mutually-agreeable schedule and at the Town's discretion.

## 3. PUBLIC SAFETY COVERAGE FOR THE PARK

a. The Orange County Sheriff's Department will be the initial primary provider, with the Town Police Department supporting and assisting in this capacity. ~~It is anticipated that over time~~ ~~t~~The Town and County public safety providers will continue to review response to calls in the park and make adjustments to responsibilities as needed and prudent[ds1].

## 4. AMENDMENTS

This Agreement may be amended by mutual written consent of the Town and County. The Agreement will be reviewed at least once every five years for needed changes and updates.

DRAFT

~~ADOPTED~~

Any future improvements to the Park after the date of this agreement will be considered by both the Town and County.

**5. TERM**

This Agreement shall terminate upon mutual agreement of the Town and County Boards of Commissioners; or on December 31, 2020~~15~~. The parties commit to review and consider renewal of the Agreement on or before December 31, 2020~~15~~. *This agreement is renewable with mutual agreement of the two governing bodies.*

**6. GOVERNMENTAL APPROVALS**

This Agreement is subject to the review and approval of the Town and County Boards of Commissioners.

**7. ENTIRE AGREEMENT**

This Agreement constitutes the entire Agreement of the parties hereto.

*This, the ~~25th~~ _day of ~~October, 2010~~ :*

_____
Mayor, Town of Hillsborough

WITNESS:

_____
Town Clerk

*This, the 7th~~16th~~ _day of December, 2015 ~~November, 2010~~ :*

_____
Chair, Orange County Board of Commissioners

WITNESS:

_____
Clerk to the Board

DRAFT

# MEMORANDUM OF INTERLOCAL AGREEMENT

## ORANGE COUNTY, NC
## TOWN OF HILLSBOROUGH, NC

## REGARDING FAIRVIEW PARK OPERATIONS AND RESPONSIBILITIES

THIS AGREEMENT, made and entered into between the Town of Hillsborough, North Carolina, a North Carolina municipal corporation, 101 East Orange Street, Hillsborough, NC 27278 (hereinafter referred to as the "Town"); and Orange County, a body politic and corporate, a political subdivision of the State of North Carolina, 200 South Cameron Street, Hillsborough, NC 27278 (hereinafter referred to as the "County"), for the joint and/or assigned operations and responsibilities of Fairview Park, located in Hillsborough, NC.

WITNESSETH

WHEREAS, the parties to this agreement are public bodies, politic and corporate, under the laws of the State of North Carolina and are vested with the power and authority to own and improve real estate for recreational and other public purposes; and

WHEREAS, the Fairview neighborhood of the Town of Hillsborough adjoins a designated park site that was identified as part of the Community Revitalization effort funded through Community Development Block Grants in the 1980s, and identified in both the County and Town Comprehensive Plans; and

WHEREAS, the 2001 Orange County Parks and Open Space Bond included funding for planning and construction of Fairview Park; and

WHEREAS, the Town and County both own property within the said Fairview Park site (hereinafter "Fairview Park"), and the Town's corporate limits abut the site on three sides; and

WHEREAS, the County and Town recognized the mutual benefit and interest of the parties hereto, and to the public generally, in the construction of park facilities on Town and County owned property for Fairview Park, with the Town agreeing to donate its land toward this purpose; and

WHEREAS, the Town and County entered into a Memorandum of Agreement in 2004 regarding use of both Town and County lands together for Fairview Park, and a process for creating a master plan for the park, as shown as Attachment 1 to this Agreement; and

DRAFT

WHEREAS, it is recognized by both parties that there are limitations imposed by safety considerations caused by the site's previous use for waste-disposal purposes, as addressed in part by a geo-technical report ("Report of Geotechnical Evaluation, Closed Hillsborough Landfill Site, July 19, 2000") that have affected the potential locations within the site for a park; and

WHEREAS, a Fairview Park Master Plan was created by a committee of County and Town representatives in 2006 and was subsequently adopted by both the Town and County Boards of Commissioners; and

WHEREAS, the County and Town jointly applied for and received grant funding for park construction from the N.C. Parks and Recreation Trust Fund in 2009; and

WHEREAS, Fairview Park was constructed in 2010, with a signed interlocal agreement dated November 16, 2010 to address needed property exchanges for public safety and liability concerns, Town contributions to park operations and potential annexation into the Town of Hillsborough, among other matters; and

WHEREAS the parties wish to continue certain arrangements regarding the operation and responsibilities of the park:

**NOW, THEREFORE**, in consideration of the foregoing and on mutual promises and obligations set forth herein, the receipt and sufficiency of which is hereby acknowledged, the parties agree as follows:

DRAFT

**1. <u>TOWN CONTRIBUTIONS TO OPERATING EXPENSES</u>**

a. The Town will provide for water and sewer service at no cost to the park restrooms, picnic shelter and water fountains.
b. The Town will be responsible for the opening and closing of any gate to the park, if such is deemed necessary, on a mutually-agreeable schedule and at the Town's discretion.

**2. <u>PUBLIC SAFETY COVERAGE FOR THE PARK</u>**

a. The Orange County Sheriff's Department will be the initial primary provider, with the Town Police Department supporting and assisting in this capacity. The Town and County public safety providers will continue to review response to calls in the park and make adjustments to responsibilities as needed and prudent.

**3. AMENDMENTS**

This Agreement may be amended by mutual written consent of the Town and County. The Agreement will be reviewed at least once every five years for needed changes and updates.

Any future improvements to the Park after the date of this agreement will be considered by both the Town and County.

**4. TERM**

This Agreement shall terminate upon mutual agreement of the Town and County Boards of Commissioners; or on December 31, 2020. The parties commit to review and consider renewal of the Agreement on or before December 31, 2020. *This agreement is renewable with mutual agreement of the two governing bodies.*

**5. GOVERNMENTAL APPROVALS**

This Agreement is subject to the review and approval of the Town and County Boards of Commissioners.

**6. ENTIRE AGREEMENT**

This Agreement constitutes the entire Agreement of the parties hereto.

*This, the ____ day of _____, 2015:*

_____
Mayor, Town of Hillsborough

WITNESS:

_____
Town Clerk

*This, the 7th day of December, 2015:*

_____
Chair, Orange County Board of Commissioners

WITNESS:

_____
Clerk to the Board

DRAFT

# Fairview Park

Phase 1

## Site Plan

**Orange County and the Town of Hillsborough, NC**

October 2010*

Town of Hillsborough Since 1754

Orange County North Carolina

**ORANGE COUNTY**
**BOARD OF COMMISSIONERS**

**ACTION AGENDA ITEM ABSTRACT**
**Meeting Date:** December 7, 2015

**Action Agenda Item No.** 6-h

**SUBJECT:** Request for Road Addition to the State Maintained Secondary Road System – Carramore Lane

**DEPARTMENT:** Planning and Inspections **PUBLIC HEARING: (Y/N)** N

**ATTACHMENT(S):**
1. Vicinity Maps of Carramore Lane
2. Carramore Subdivision Final Plat
3. NCDOT Petition Information for Carramore Lane

**INFORMATION CONTACT:**
Abigaile Pittman, 245-2567
Tom Altieri, 245-2575
Craig Benedict, 245-2585

**PURPOSE:** To make a recommendation to the North Carolina Department of Transportation (NCDOT), and in turn the North Carolina Board of Transportation (NC BOT), concerning a petition to add Carramore Lane in Carramore Subdivision to the State Maintained Secondary Road System.

**BACKGROUND:**
This request includes one (1) petition for one (1) road addition to the State Maintained Secondary Road System. The road and its respective length and width are as follows:

| Road Name | Length in Miles | Pavement/Right-of-way Widths in Feet |
|---|---|---|
| Carramore Lane | 0.01 | 20/50 |

**Carramore Subdivision**
Seven (7) platted lots for single-family residential use currently are developed and take their access from Carramore Lane. One (1) additional undeveloped lot has frontage along Carramore Lane. Carramore Lane is situated east of Kerley Road and the Durham County line, and is an extension of Carramore Lane from Durham County (Attachment 1).

Carramore Subdivision is a major subdivision approved in 2008 in the Eno Township. Only a small portion of the project, specifically this petitioned .01 mile portion of Carramore Lane is located in Orange County's jurisdiction. The County approved the roadway entrance as well as some reservation of open space along Kerley Road, but took no action in approving the creation of the actual lots because they fall into Durham County's planning jurisdiction. The subdivision was recorded both in Durham County and with the Orange County

Register of Deeds on June 22, 2008 (Attachment 2). The approval of this project also allowed for the dedication of additional right-of-way for Kerley Road along the subdivision frontage. The remainder of Carramore Lane is also being petitioned to be added to the State Maintained Secondary Road System in Durham County, and the two petitions are being coordinated by NCDOT.

North Carolina General Statute §136-62 requires that road petitions for additions to the state system be made by the Board of County Commissioners (BOCC). NCDOT has investigated this request and has submitted a petition to the BOCC for its recommendation (Attachment 3).

**Conclusion**

The above-referenced application meets the criteria endorsed by the BOCC for recommending acceptance of public roads into the State Maintained System for roads approved through the governing jurisdiction's major subdivision process *(NCDOT Subdivision Roads Minimum Construction Standards, January 2010)*. The application also complies with the Resolution of Approval adopted by the Board of County Commissioners (BOCC) in 2000.

**FINANCIAL IMPACT:** There is no direct financial impact to the County associated with this item. NCDOT will incur additional maintenance responsibilities and costs.

**SOCIAL JUSTICE IMPACT:** The following Orange County Social Justice Goal is associated with this item:

> **GOAL: CREATE A SAFE COMMUNITY**
> The reduction of risks from vehicle/traffic accidents, childhood and senior injuries, gang activity, substance abuse and domestic violence.

The addition of county private residential streets to the State Maintained Secondary Road System results in positive outcomes related to the above goal.

**RECOMMENDATION(S):** The Manager recommends the Board:

1. Forward the Petition for Addition to the State Maintained System to the North Carolina Department of Transportation for Carramore Lane in Carramore Subdivision; and
2. Recommend the Department of Transportation accept the road for maintenance as a State Secondary Road.

**Attachment 1**

# Carramore Lane

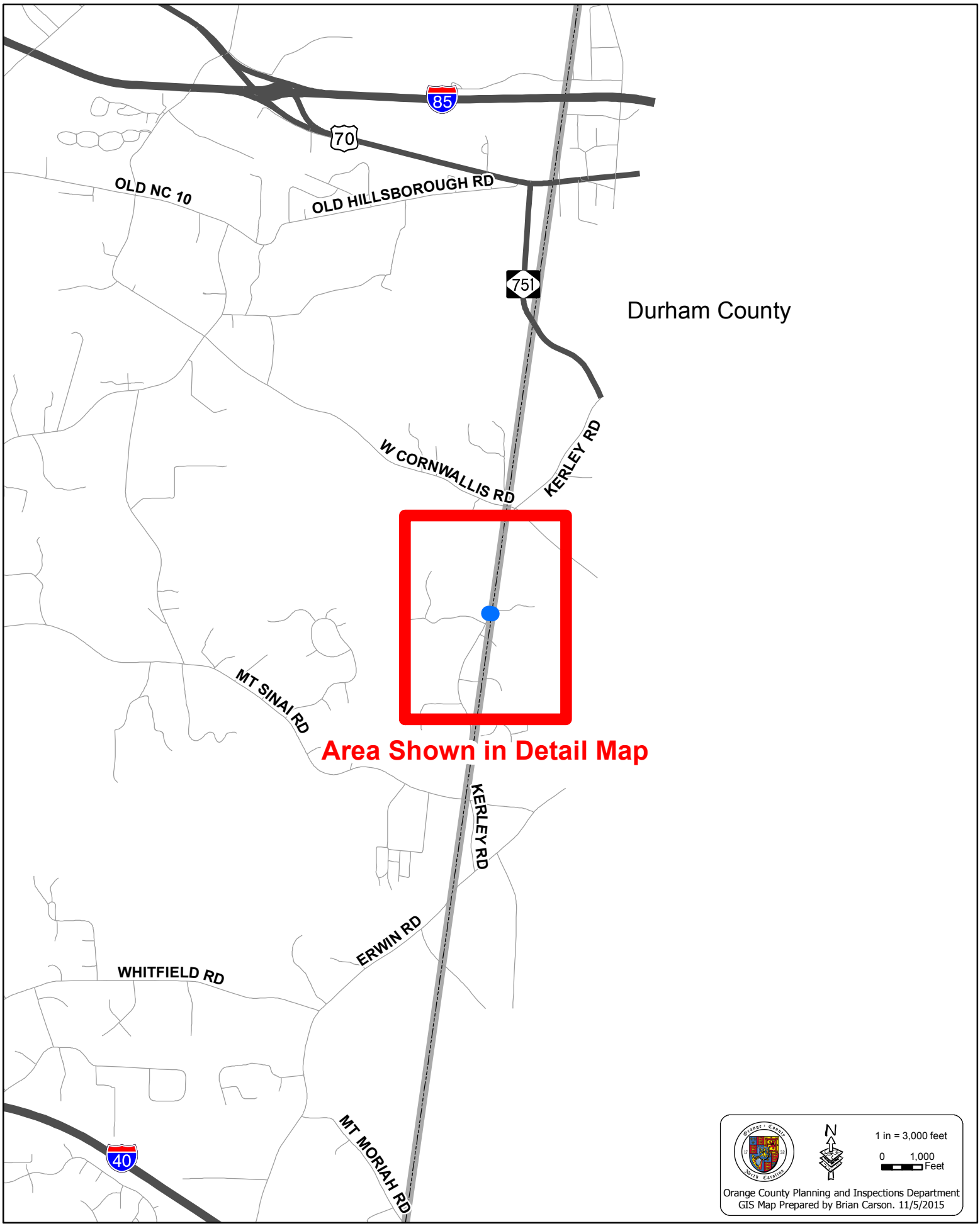

# Detail Map of Carramore Lane

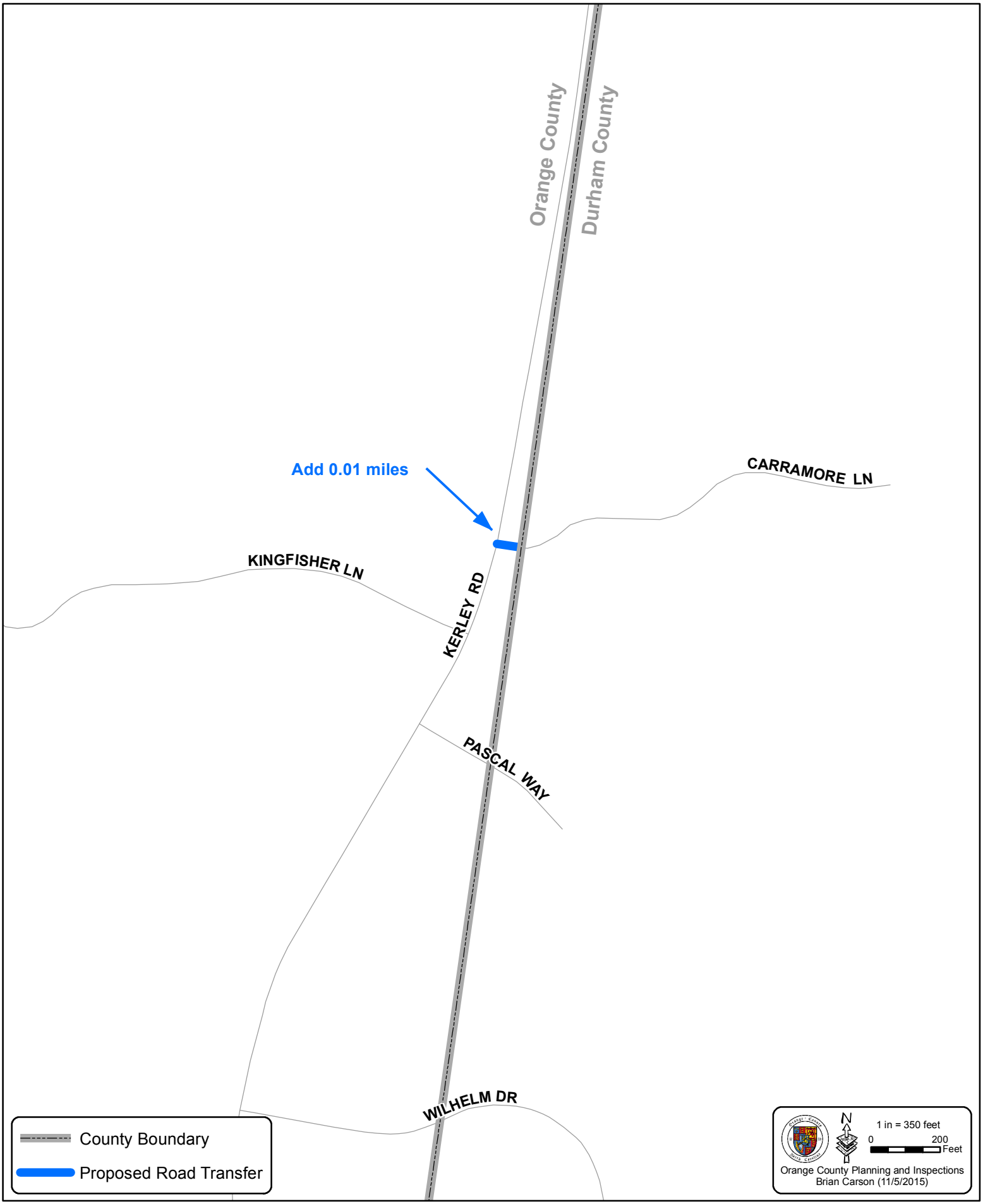

DURHAM

FILED Joyce H. Pearson
Register of Deeds, Orange Co.,NC
Recording Fees $21.00
NC Real Estate Tax $0.00

2008052200001252B0 PLAT
Bk:PL103 Pg:184
05/22/2008 09:41:50 AM 1/1

Book 103 Page 184

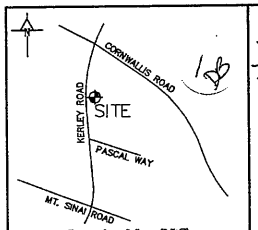


Location Map (NTS)

I, William G. Harris in my capacity as local Counsel for Ticon Thomas Properties Partnership hereby certify that to the best of my knowledge and belief, Ticon Thomas Properties Partnership is the owner of record of the tract of land described hereon, and that W. Jack McGhee is the owner's agent authorized to sign the dedication statement pertaining to this recording, as of this 13 day of May 2008.

State of NC County of ALAMANCE

I, MARIA ANN SCONZO a notary for said County and State, do hereby certify that WILLIAM G. HARRIS appeared before me this day and acknowledged the due execution of the foregoing instrument. Witness my hand and official seal, this 13 day of May 2008.

My Commission Expires 6-2-2008

DEPARTMENT OF TRANSPORTATION
DEPARTMENT OF HIGHWAY
PROPOSED SUBDIVISION ROAD
CONSTRUCTION STANDARDS CERTIFICATION
DESIGN
APPROVED
DISTRICT ENGINEER
DATE 05/12/08

General Notes:
1. Out Bounds based on actual field survey performed by S. D. Puckett & Associates, Inc. entitled "Boundary Survey for: Ticon Properties, LLC. dated February 05, 2007 and Deeds and Plats of recorded in the Counties of Orange & Durham Register of Deeds Office.
2. Property is NOT located in a special flood hazard area as determined by F.E.M.A. and depicted on F.I.R.M. #3720080100K, dated 2/02/2007 and #3720080200J dated 5-2-06.

General Site Notes:
1. Area of Site within Orange County 15,077 S.F or 0.346 Acre
Area of Site within Durham County 884,212 S.F or 20.299 Acres
Total site area is 899,289 S.F. or 20.645 Acres.
2. The Property is zoned RR Residential Rural.
3. The Development Tier is Rural.
4. The Property is in the Neuse River Basin
5. Areas shown as Common Open Space (COS) is hereby dedicated to the Home Owners Association with restricted development potential.
6. All driveways shall be no less than 18 Feet.
7. Reference the recorded Homeowner Association Documents and the Declaration of Covenants, Conditions and Restrictions for the Carramore Subdivision, for additional building and setbacks requirements.
8. Regarding the street easement, no structures, fill, embankments or obstructions are permitted within the easement except according to terms accepted by NCDOT.

GRAPHIC SCALE
(IN FEET)
1 inch = 100 ft.

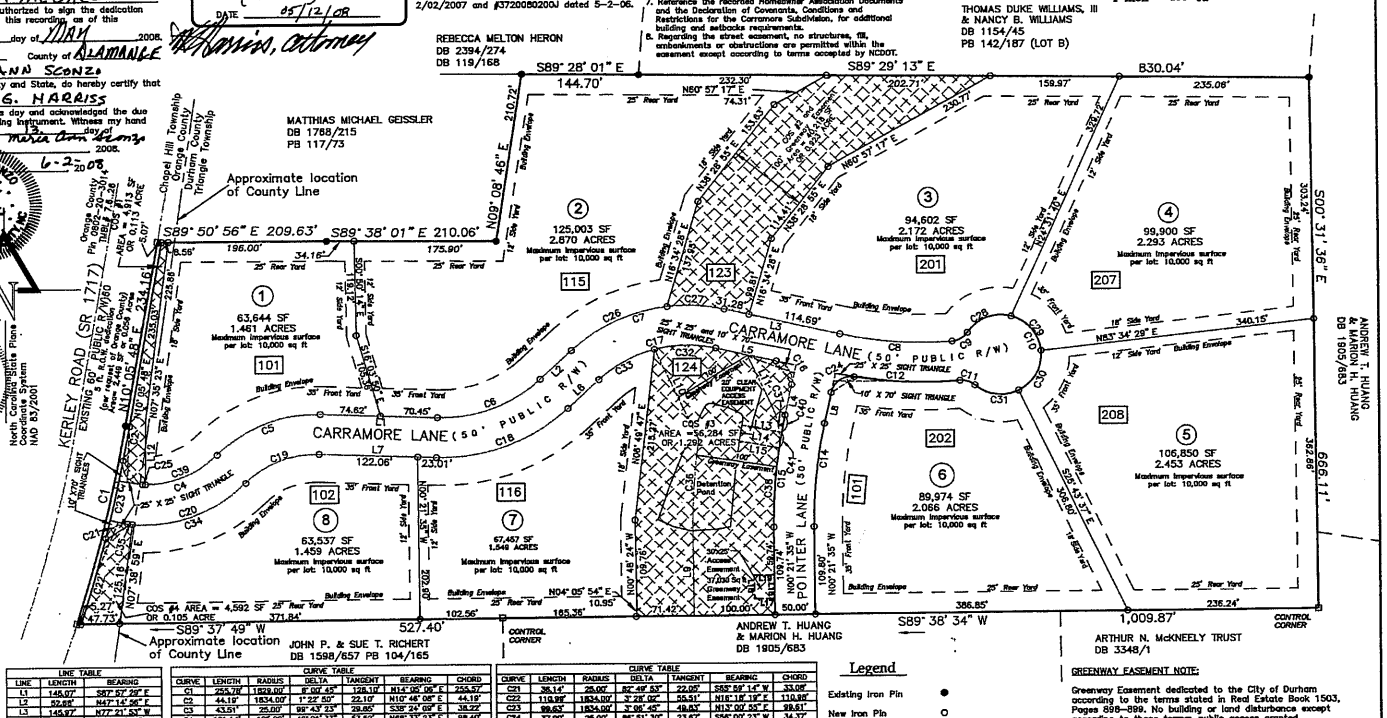
KERLEY ROAD (SR 1717) (PUBLIC R/W)
CARRAMORE LANE (50' PUBLIC R/W)
POINTER LANE (50' PUBLIC R/W)
Approximate location of County Line
MATTHIAS MICHAEL GEISSLER DB 1768/215 PB 117/73
REBECCA MELTON HERON DB 2394/274 DB 119/168
THOMAS DUKE WILLIAMS, III & NANCY B. WILLIAMS DB 1154/45 PB 142/187 (LOT B)
ANDREW T. HUANG & MARION H. HUANG DB 1905/683
JOHN P. & SUE T. RICHERT DB 1598/657 PB 104/165
ARTHUR N. McKNEELY TRUST DB 3348/1
CONTROL CORNER
S89° 28' 01" E 144.70'
S89° 29' 13" E 830.04'
S89° 50' 56" E 209.63'
S89° 38' 01" E 210.06'
N09° 08' 46" E 210.72'
S00° 31' 36" E 666.11'
S89° 37' 49" W 527.40'
S89° 38' 34" W 1,009.87'
N04° 05' 54" E 102.56'
1 63,644 SF 1.461 ACRES Maximum Impervious surface per lot: 10,000 sq ft
2 125,003 SF 2.870 ACRES Maximum Impervious surface per lot: 10,000 sq ft
3 94,602 SF 2.172 ACRES Maximum Impervious surface per lot: 10,000 sq ft
4 99,900 SF 2.293 ACRES Maximum Impervious surface per lot: 10,000 sq ft
5 106,850 SF 2.453 ACRES Maximum Impervious surface per lot: 10,000 sq ft
6 89,974 SF 2.066 ACRES Maximum Impervious surface per lot: 10,000 sq ft
7 67,457 SF 1.549 ACRES Maximum Impervious surface per lot: 10,000 sq ft
8 63,537 SF 1.459 ACRES Maximum Impervious surface per lot: 10,000 sq ft
COS #1 AREA = 4,592 SF OR 0.105 ACRE
COS #3 AREA = 56,284 SF OR 1.292 ACRES
Detention Pond
Greenway Easement
Access Easement
Drainage Easement
Building Envelope
25' Rear Yard
35' Front Yard
12' Side Yard
18' Side Yard
25' X 25' SIGHT TRIANGLE
10' X 70' SIGHT TRIANGLE
25' CLEAR EMERGENCY ACCESS EASEMENT
Chapel Hill Township Orange County Durham County Triangle Township
Orange County TMB 0802-20-30-4 DB 1768/215 PB 117/73 AREA = 4.613 SF OR 0.13 ACRE
Per Orange County Tax Map (not a field survey) N10° 05' 46" E 234.16'
N83° 34' 29" E 340.15'
S00° 43' 37" E 306.80'
N00° 01' 35" W 109.95'
N00° 48' 24" W 109.76'
N00° 38' 33" W 109.80'
N00° 38' 33" W 109.80'
N00° 38' 33" W 109.80

**Attachment 3**



STATE OF NORTH CAROLINA
# DEPARTMENT OF TRANSPORTATION

PAT MCCRORY
GOVERNOR

NICHOLAS J. TENNYSON
SECRETARY

October 19, 2015

**ORANGE COUNTY**

Ms. Bonnie Hammersley
County Manager
Orange County
P.O. Box 8181
Hillsborough, North Carolina 27278

SUBJECT: Request for Road Addition
**Carramore Lane**
**Carramore Subdivision**

Dear Ms. Hammersley,

Please find attached is Form SR-4 Secondary Road Addition Investigation Report, Form SR-1 Petition for Road Addition, recorded plat, and a location map for the above subject. This road addition is being administered in conjunction with addition of remainder of road in Durham County.

This is being forwarded to you for consideration by your Board of Commissioners**.**

Sincerely,

C.N. Edwards, Jr., P.E.
District Engineer

Attachments
/tcs

# DEPARTMENT OF TRANSPORTATION INTEROFFICE MEMO

**RIGHT OF WAY BRANCH**
**P. O. BOX 14996**
**GREENSBORO, N.C. 27415-4996**
**Phone: 336-334-3515** **Fax: 336-334-5331**

**October 13, 2015**

**MEMO TO:** Chuck Edwards, District Engineer

**MEMO FROM:** Alan Rothrock

**COUNTY:** Orange

**SUBJECT:** Addition to System—Carramore Subdivision

I have the plats of the Orange County Registry furnished by your office. Based on my examination of the plats it appears that the Right of Way for the roads is as follows, as well as sight distances as shown on plats.

| | |
|---|---|
| Carramore Ln. | 50 ft. |

If any additional information is needed, please contact me at the number above.

# North Carolina Department of Transportation
## Division of Highways
## Secondary Road Addition Investigation Report

County: Orange Co. File No: O-14-09 Date: 09-23-2015
Township: Chapel Hill Div. File No: Div. No: 7

Local Name: Carramore Lane Subdivision Name: Carramore Subdivision
Length: 0.01 Miles Width: 20 feet Surface Type: SF9.5A PVMT Condition: Good
Surface Thickness 2-inches Base Type ABC Base Thickness 8-inches

*Bridges Yes____ No__X * Pipe > 48" Yes____ No_X_ *Retaining Walls Within Right of Way Yes___ No_X___

*** If Yes -Include Bridge Maintenance Investigation Report**

Is this a subdivision street subject to the construction requirements for such streets? Yes
Recording Date: 05-22-2008 Book: 103 Page: 184
Number of homes having entrances into road: 7
Other uses having entrances into road: None
Right-of-Way Width: 50 feet If right-of-way is below the desired width, give reasons under "Remarks and Recommendations."
Is petition (SR-1) attached? Yes
Is the County Commissioners Approval (SR-2) attached? Yes If not, why not? _____
Is a map attached indicating information for reference in locating road by the Planning Department? Yes
Cost to place in acceptable maintenance condition: Total Cost: $ 0.00
Grade, drain, stabilize: $ 0.00 Drainage: $ 0.00 Other: $ 0.000
Remarks and Recommendations: Meets minimum requirement. Recommend addition. Est. ADT 42. Small portion of road within Orange County is being added in conjunction with the remainder of the road in Durham County.

Submitted by: _____ DISTRICT ENGINEER Reviewed and Approved: _____ DIVISION ENGINEER

Reviewed and Approved
BOARD OF TRANSPORTATION MEMBER: _____

| | |
|---|---|
| | Do not write in this space- For Use by Secondary Roads Unit<br><br>Petition # |

**ORANGE COUNTY**
**BOARD OF COMMISSIONERS**

**ACTION AGENDA ITEM ABSTRACT**
**Meeting Date:** December 7, 2015

**Action Agenda Item No.** 6-i

**SUBJECT:** Request for Road Addition to the State Maintained Secondary Road System – Lucas Farm Lane

**DEPARTMENT:** Planning and Inspections **PUBLIC HEARING: (Y/N)** N

**ATTACHMENT(S):**
1. Vicinity Maps of Lucas Farm Lane
2. Lucas Farm at New Hope Creek Subdivision Resolution of Approval
3. Lucas Farm at New Hope Creek Subdivision Final Plat
4. NCDOT Petition Information for Lucas Farm Lane

**INFORMATION CONTACT:**
Abigaile Pittman, 245-2567
Tom Altieri, 245-2575
Craig Benedict, 245-2585

**PURPOSE:** To make a recommendation to the North Carolina Department of Transportation (NCDOT), and in turn the North Carolina Board of Transportation (NC BOT), concerning a petition to add Lucas Farm Lane in New Hope Creek Subdivision to the State Maintained Secondary Road System.

**BACKGROUND:** This request includes one (1) petition for one (1) road addition to the State Maintained Secondary Road System. The road and its respective length and width are as follows:

| Road Name | Length in Miles | Pavement/Right-of-way Widths in Feet |
|---|---|---|
| Lucas Farm Lane | 0.11 | 18/50 |

**Lucas Farm at New Hope Creek Subdivision**
Five (5) platted lots in single-family residential use currently are developed and have access to Lucas Farm Lane. Three (3) additional undeveloped lots have frontage along Lucas Farm Lane. Lucas Farm Lane is situated north of New Hope Church Road, east of Old NC 86 (Attachment 1).

Lucas Farm at New Hope Creek Subdivision is a major subdivision approved by Orange County in 2008 in the Chapel Hill Township. The project was reviewed with a public

roadway proposed. A Resolution of Approval for the subdivision was approved by the Board of Commissioners on December 11, 2008 (Attachment 2). The subdivision was recorded by the Orange County Register of Deeds on February 14, 2011 (Attachment 3). Both documents called for the public dedication Lucas Farm Lane at the appropriate time.

North Carolina General Statute §136-62 requires that road petitions for additions to the state system be made by the Board of County Commissioners (BOCC). NCDOT has investigated this request and has submitted a petition to the BOCC for its recommendation (Attachment 4).

**Conclusion**

The above-referenced application meets the criteria endorsed by the BOCC for recommending acceptance of public roads into the State Maintained System for roads approved through the governing jurisdiction's major subdivision process *(NCDOT Subdivision Roads Minimum Construction Standards, January 2010)*. The application also complies with the Resolution of Approval adopted by the Board of County Commissioners (BOCC) in 2000.

**FINANCIAL IMPACT:** There is no direct financial impact to the County associated with this item. NCDOT will incur additional maintenance responsibilities and costs.

**SOCIAL JUSTICE IMPACT:** The following Orange County Social Justice Goal is associated with this item:

> **GOAL: CREATE A SAFE COMMUNITY**
> The reduction of risks from vehicle/traffic accidents, childhood and senior injuries, gang activity, substance abuse and domestic violence.

The addition of county private residential streets to the State Maintained Secondary Road System results in positive outcomes related to the above goal.

**RECOMMENDATION(S):** The Manager recommends the Board:

1. Forward the Petition for Addition to the State Maintained System to the North Carolina Department of Transportation for Lucas Farm Lane in Lucas Farm at New Hope Creek Subdivision; and
2. Recommend the Department of Transportation accept the road for maintenance as a State Secondary Road.

**Attachment 1**

# Lucas Farm Lane

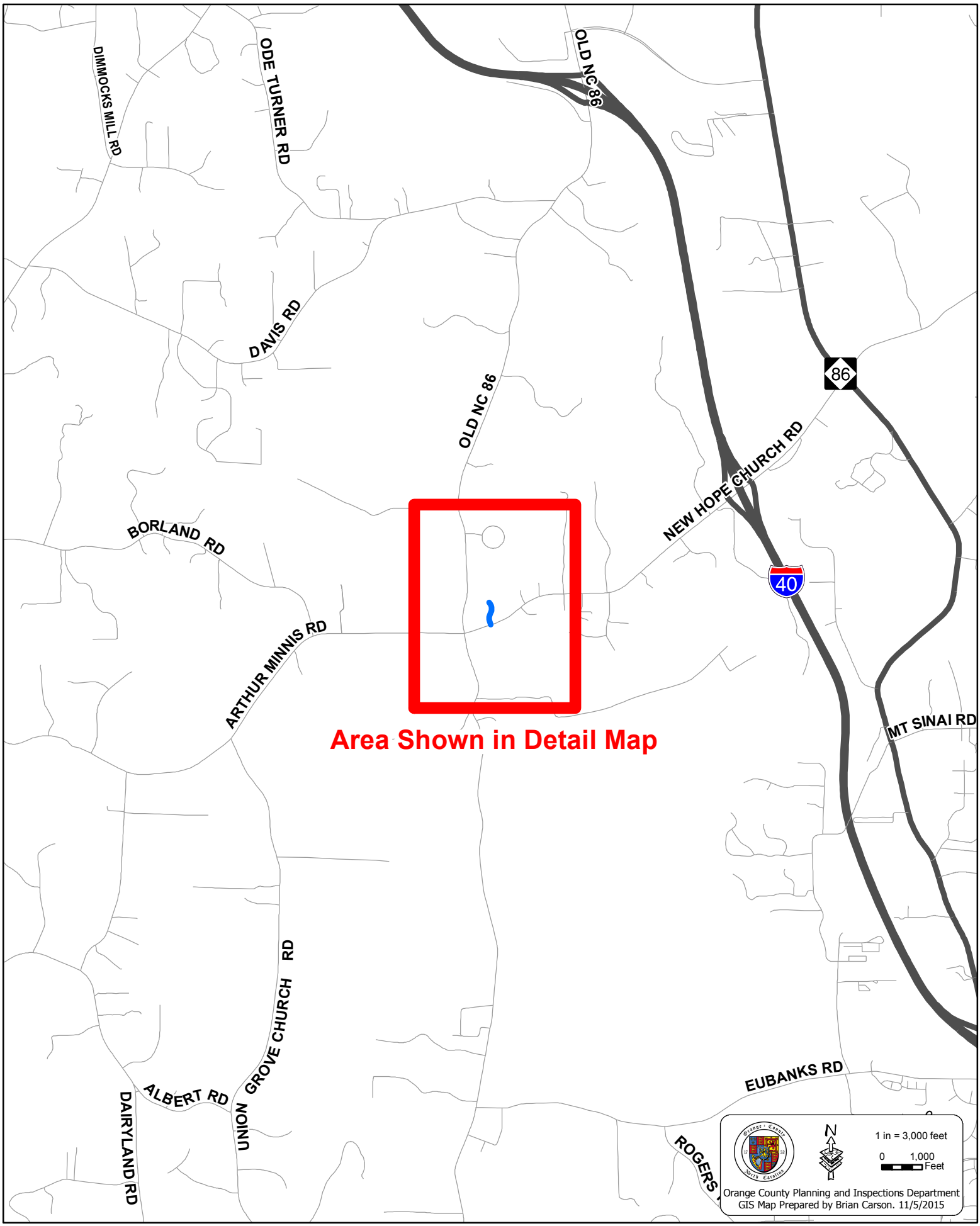

# Detail Map of Lucas Farm Lane

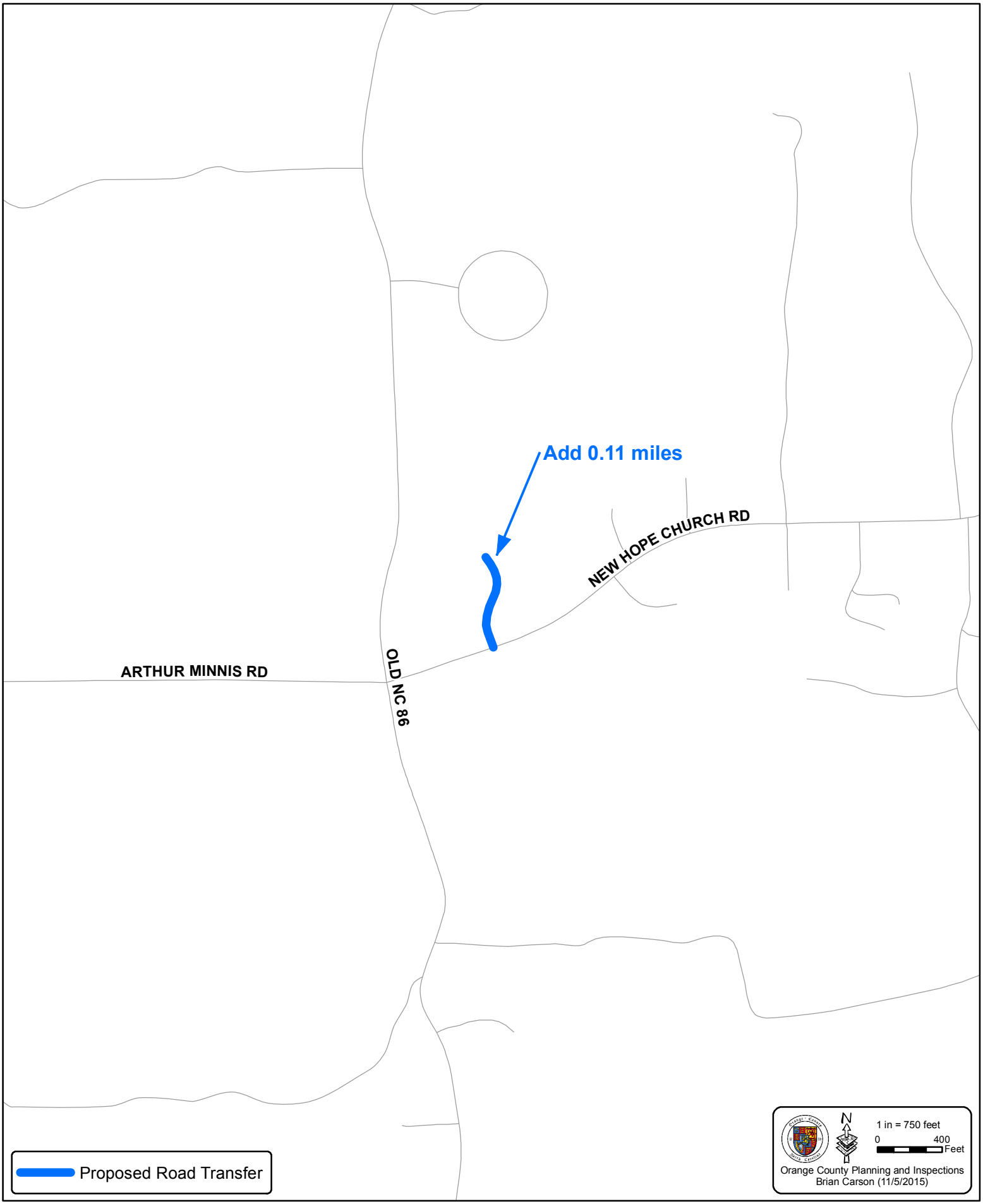

12-11-08
6b 5

**Attachment 2**

**RESOLUTION**
**OF THE**
**ORANGE COUNTY BOARD OF COUNTY COMMISSIONERS**

**Date:** December 11, 2008

**Name of Subdivision:** Lucas Farm at New Hope

**Owner/Applicant:** Ticon Properties, LLC.

The Board of County Commissioners hereby approves Lucas Farm at New Hope subdivision preliminary plat, dated July 9, 2008 as revised by surveyor Steve F. Yuhasz on August 29, 2008 containing 9 lots, subject to the fulfillment of requirements specified herein.

Lucas Farm Road shall be irrevocably dedicated to the general public and constructed to standards of the North Carolina Department of Transportation. The approval of this resolution authorizes and directs the Orange County Manager to accept for Orange County and on behalf of the public generally, the offer of dedication of Lucas Farm Road. This acceptance by Orange County of the dedication to the general public of Lucas Farm Road shall be without maintenance responsibility. This road shall be maintained by the owner/applicant until such time as it is accepted for maintenance by the North Carolina Department of Transportation or some other governmental body. Before the Final Plat of Lucas Farm at New Hope can be recorded:

**A. Sewage Disposal**

1. Each residential lot shall contain an adequate area for septic disposal, and repair area, approved by the Orange County Division of Environmental Health.

2. The septic system location may restrict the size and location of improvements. This disclosure shall be included in a document describing development restrictions to be recorded concurrently with the Final Plat. The document shall also disclose that information regarding the tentative location of septic systems is available from the Orange County Health Department, Division of Environmental Health.

3. Language shall be inserted into the Declarations requiring each lot owner to have the septic system serving their lot inspected by a licensee of the NC On-Site Wastewater Contractors and Inspectors Certification Board (the "Board"), who is properly registered to perform such inspections within Orange County, no less than one time in every five (5) year period (unless inspections are required more often by and rule or regulation of the Orange County Health Department) and to have the system pumped if recommended by the inspector. Payment for the inspections required under this condition shall be the responsibility of the individual lot owner or

the homeowner's association as established by the governing Homeowner's Association declaration.

**B. Roads and Access**

1. Lucas Farm Road shall be constructed to standards of the North Carolina Department of Transportation, within a minimum 50-foot right-of-way with 5-foot utility easements on each side, and the construction shall be inspected and approved by NCDOT.

   OR

   A letter of credit or escrow agreement shall be submitted to secure construction of Lucas Farm Road to the standards of the North Carolina Department of Transportation. An estimate of the construction cost must be prepared by a certified/licensed engineer or grading contractor and submitted to the Planning and Inspections Department. The financial guarantee must reflect 110% of that estimate and be issued by an accredited financial institution licensed to do business in North Carolina.

   The document describing development restrictions to be recorded with the Final Plat shall state that the financial guarantee will not be released until the road construction has been inspected and approved by NCDOT.

2. All lots shall receive access from the internal subdivision road with the exception of the Open Space lot dedicated to Orange County. No driveway shall be permitted within 50' of a street intersection. The final plat shall contain "No Vehicular Access Easement" for lots 5-9 of the subdivision abutting Old NC 86 and lots 1 and 9 abutting New Hope Road.

3. An erosion control plan for construction of Lucas Farm Road shall be submitted by the applicant to the Orange County Erosion Control Division for review and approval prior to any land disturbing activity occurring on the site.

4. Approved double-bladed street name signs shall be erected at the intersection of Lucas Farm Road and New Hope Church Road prior to issuance of any building permit if road construction is not completed prior to recording of the final plat.

5. Prior to any construction or alteration of any existing access within the right-of-way of New Hope Church Road, the owner/applicant shall secure a driveway permit from the NCDOT District Office. The owner/applicant shall submit a copy of the NCDOT-approved permit and NCDOT approval letter to the Planning Department prior to or at the same time as the request for a grading permit is made, or before Planning Department signatures are affixed on the Final Plat, whichever is first.

6. Sight triangles (10'x 70') shall be shown on the Final Plat at the intersection of Lucas Farm Road with New Hope Church Road.

7. Show on the final plat, and dedicate in fee simple, twenty (20) feet of additional right-of-way, or 50 feet from the centerline of the existing right-of-way, whichever is greater, along the frontage of Old NC 86.

8. Show on the final plat, and dedicate, in fee simple, five (5) feet of additional right-of-way, or 35 feet from the centerline of the existing right-of-way, whichever is greater, along the frontage of New Hope Church Road. Said dedication shall meet major collector road right-of-way standards as identified in the Comprehensive Plan and required in Section IV-B-3-c-1 of the Subdivision Regulations.

9. Public access is prohibited along the cul-de-sac, but is permitted on points where this property adjoins the other public roads.

## C. Land Use Buffers and Landscaping

1. Landscaping shall be installed or preserved as indicated on the approved landscape plan, and shall be inspected and approved by the Planning and Inspections Department prior to signatures on final plat. No part of the landscaping shall encroach into the 10' x 70' sight triangles at the intersection.

   OR

   Guaranteed financially through a letter of credit or escrow agreement submitted to secure required landscape installation and preservation. An estimate of the cost for required preservation, plantings and their installation must be provided. The financial guarantee shall reflect 110 percent of the estimate and be issued by an accredited financial institution licensed to do business in North Carolina in a form approved by the County Attorney.

   Provisions for protection of existing trees as shown on the approved landscape plan shall be included in a document describing development restrictions and requirements to be prepared by Planning Staff and recorded concurrently with the Final Plat. No clear cutting on individual lots is permitted pursuant to section IV-B-8-c of the Orange County Subdivision Regulations.

2. In accordance with Article 12.6 of the Orange County Zoning Ordinance a type E 75-foot buffer shall be maintained (i.e. left undisturbed) along existing Old NC 86. Language shall be provided in the Homeowners Association documents to the effect that clearing within the 75 foot buffer along existing Old NC 86 is not permitted with the exception of septic system repair areas.

3. In accordance with Article 12.6 of the Orange County Zoning Ordinance a type A 30-foot buffer shall be maintained (i.e. left undisturbed) along New Hope Church Road. Language shall be provided in the Homeowners Association documents to the effect that clearing within the 30 foot buffer along New Hope Church Road is not permitted with the exception of

septic system repair areas.

4. Common area landscaping trees and shrubs shall be of a native species and drought tolerant.

## D. Drainage

1. Drainage Easements shall be located on the final plat as required following review and approval of the Erosion Control Plan by County staff.

2. Drainage culverts shall be sized and located appropriately by a licensed North Carolina Professional Engineer as required by NCDOT and Orange County Erosion Control.

3. Low Impact Design devices (LID) shall be incorporated into drainage-way to lessen the stormwater impact to the streams.

## E. Parkland

1. The open space dedication shall be shown and labeled accordingly on the final plat. The developer shall deed to Orange County, in fee simple, a total of 20.99 acres of open space. The deed shall be recorded concurrently with the final plat with a copy of the recorded deed provided to ERCD and the Planning Department. This dedication will satisfy the public recreation payment-in-lieu requirement of the Subdivision Regulations. Public access to this open space/public recreation lot is prohibited from Lucas Farm Road; however, public access to this open space/public recreation lot may be permitted by Orange County from Old NC 86 or otherwise as determined by Orange County as part of it's ownership, management and operation of this open space/public recreation lot for open space/public recreation purposes.

## F. Construction Waste

1. Per the Orange County Solid Waste Ordinance, clean wood waste, scrap metal and corrugated cardboard, and all construction waste, shall be recycled.
2. All haulers of construction waste shall be properly licensed. Developer shall confirm that hauling contractors are licensed to haul waste in Orange County.
3. Prior to any demolition or construction activity on the site the applicant shall hold a pre-demolition / pre-construction conference with the County's Solid Waste staff. This may be the same meeting held with other county officials.

## G. Miscellaneous

1. The Final Plat shall contain a title block and vicinity map in accordance with Section V-D-2 and V-D-3 of the Orange County Subdivision Regulations.

2. The open space not dedicated to Orange County shall be conveyed into the Homeowner's Association. Tree cutting in the roadside open space is prohibited except for necessary maintenance purposes that have been approved by County staff prior to any such tree cutting taking place. The restrictive covenants applicable to the property shall be approved by the County Attorney.

3. If street lighting is proposed in the future, then a lighting plan shall be submitted to the Planning and Inspections Department for review and approval prior to the purchase of lighting fixtures from the utility provider or other vendor. All lighting shall meet the Outdoor Lighting Standards as set forth in section 6.31 of the Orange County Zoning Ordinance.

4. A sign permit shall be obtained from the Planning and Inspections Department for the subdivision sign located at or near the entrance of the subdivision prior to beginning construction.

5. Methods of disposal of trees, limbs, stumps and construction debris associated with construction activity shall be by some method other than open burning as stated in the Orange County Zoning Ordinance.

6. The correct PIN number for the property shall be listed on the Final Plat.

7. Show on the final plat, and include in the declarations, the clearing limits on lot 4 that prohibits disturbance within the stream buffer.

8. The owner shall file, with the Planning Department and record with the Final Plat, a declaration of covenants and restrictions, articles of incorporation, where required, and/or by-laws, all as approved by the County Attorney, that will govern the maintenance and control of the improvements as set forth in Article III-E of the Orange County Subdivision Regulations. Said documents shall provide for ownership of open space and the dedication of easements to access open space, common area POSA's, drainage easements and buffers, for maintenance. The Owner has agreed that said documents shall not restrict the use of energy efficient measures, including but not limited to clotheslines by the lot owners, nor shall said documents require any lot owner to engage in water intensive lawn maintenance.

## H. Certifications

1. A Certificate of Survey and Accuracy signed by a Professional Land

Surveyor shall be on the face of the Final Plat in the form provided in Section V-D-6-a of the Orange County Subdivision Regulations.

2. A Certificate of Declaration and Maintenance in the form provided in Section V-D-6-b of the Orange County Subdivision Regulations signed by the landowner and developer shall be on the face of the plat and included in a document describing development restrictions to be recorded concurrently with the Final Plat.

3. The North Carolina Department of Transportation shall certify that the platted portion of Lucas Farm Road has been entirely constructed to State standards or that construction plans have been approved prior to Planning Department signatures on final plat.

4. A Certificate of Approval signed by the Orange County Planning and Inspections Department and the Orange County Environmental Health Department shall appear on the face of the final plat in accordance with Section V-D-6-c of the Orange County Subdivision Regulations.

NOW THEREFORE BE IT RESOLVED by the Board of Orange County Commissioners that the Preliminary Plan for Lucas Farm at New Hope Subdivision is approved in accordance with the above mentioned conditions and attached Preliminary Plat dated July 9, 2008 as revised by surveyor Steve F. Yuhasz on August 29, 2008.

Upon motion of Commissioner Hemminger, seconded by Commissioner Pelissier the foregoing resolution was adopted this the 11 day of December 2008.

I, Donna S. Baker, Clerk to the Board of Commissioners for the County of Orange, North Carolina, DO HEREBY CERTIFY that the foregoing is a true copy of so much of the proceedings of said Board at a meeting held on December 11, 2008 as relates in any way to the adoption of the foregoing and that said proceedings are recorded in Minute Book No. ____ of the minutes of said Board.

WITNESS my hand and the seal of said County, this 25th day of March, ~~2008~~. 2010

Clerk to the Board of Commissioners

# Attachment 3

Book 108 Page 30

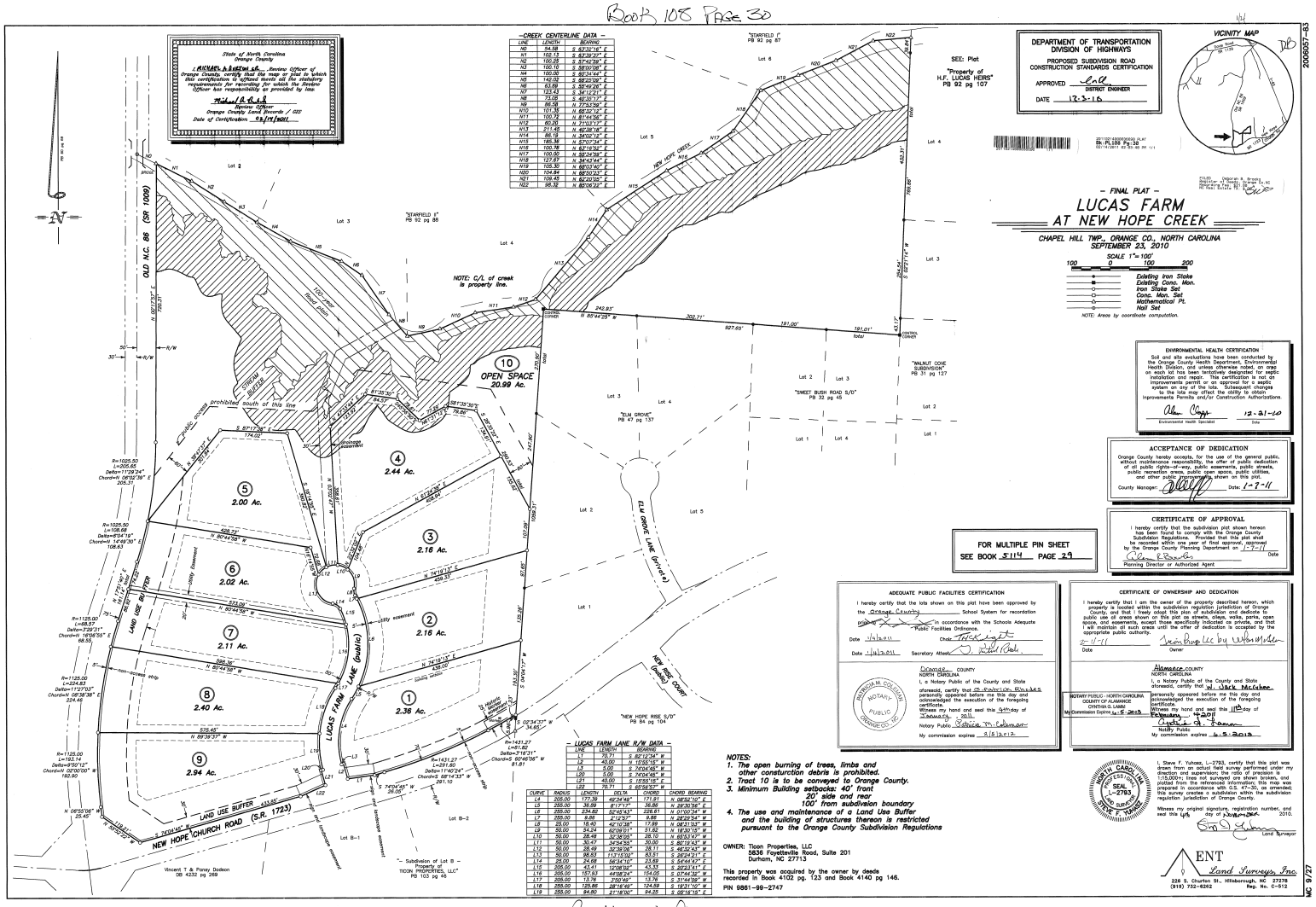


Book 108 Page 30

STATE OF NORTH CAROLINA
# DEPARTMENT OF TRANSPORTATION

PAT MCCRORY
GOVERNOR

NICHOLAS J. TENNYSON
SECRETARY

October 19, 2015

**ORANGE COUNTY**

Ms. Bonnie Hammersley
County Manager
Orange County
P.O. Box 8181
Hillsborough, North Carolina 27278

SUBJECT: Request for Road Addition
**Lucas Farm**
**Lucas Farm at New Hope Creek**

Dear Ms. Hammersley:

Please find attached is Form SR-4 Secondary Road Addition Investigation Report, Form SR-1 Petition for Road Addition, recorded plat, and a location map for the above subject.

This is being forwarded to you for consideration by your Board of Commissioners**.**

Sincerely,

C.N. Edwards, Jr., P.E.
District Engineer

Attachments
/tcs

# DEPARTMENT OF TRANSPORTATION INTEROFFICE MEMO

**RIGHT OF WAY BRANCH**
**P. O. BOX 14996**
**GREENSBORO, N.C. 27415-4996**
**Phone: 336-334-3515** **Fax: 336-334-5331**

**October 13, 2015**

**MEMO TO:** Chuck Edwards, District Engineer

**MEMO FROM:** Alan Rothrock

**COUNTY:** Orange

**SUBJECT:** Addition to System—Lucas Farm at New Hope Creek Subdivision

I have examined the Lucas Farm at New Hope Creek Subdivision plats of the Orange County Registry, furnished by your office. Based on my examination of the plats it appears that the Right of Way for the roads is as follows, as well as sight distances and Utility Easements as shown on plats.

| | |
|---|---|
| Lucas Farm Ln. | 50 ft. |

*Note: The R/W appears to be approximately 55’ wide and 45’ deep from the R/W of New Hope Church Rd. (SR-1723). Then it steps in to a 50’ R/W.

If any additional information is needed, please contact me at the number above.

# North Carolina Department of Transportation
## Division of Highways
## Secondary Road Addition Investigation Report

County: ORANGE Co. File No: 0-13-11 Date: 09-28-2015
Township: CHAPEL HILL Div. File No: Div. No: 7

Local Name: LUCAS FARM LANE Subdivision Name: LUCAS FARM AT NEW HOPE CREEK

Length: 0.11 miles Width: 18 feet Surface Type: S9.5A PVMT Condition: Good

Surface Thickness: 2 inches Base Type: ABC Base Thickness: 8 inches

*Bridges Yes____ No_X_ * Pipe > 48" Yes____ No_X_ *Retaining Walls Within Right of Way Yes__ No_X___

*** If Yes -Include Bridge Maintenance Investigation Report**

Is this a subdivision street subject to the construction requirements for such streets? YES

Recording Date: 02-14-2011 Book: 108 Page: 30

Number of homes having entrances into road: 5

Other uses having entrances into road: NONE

Right-of-Way Width: 50 FEET If right-of-way is below the desired width, give reasons under "Remarks and Recommendations."

Is petition (SR-1) attached? YES

Is the County Commissioners Approval (SR-2) attached? YES If not, why not?

Is a map attached indicating information for reference in locating road by the Planning Department? YES

Cost to place in acceptable maintenance condition: Total Cost: $ 0.00

Grade, drain, stabilize: $ 0.00 Drainage: $ 0.00 Other: $ 0.00

Remarks and Recommendations: Meets minimum requirement. Recommend addition.

Submitted by: C.N. Edwards
DISTRICT ENGINEER

Reviewed and Approved: J.M. Mills
DIVISION ENGINEER

Reviewed and Approved
BOARD OF TRANSPORTATION MEMBER: _____

| | |
|---|---|
| | Do not write in this space- For Use by Secondary Roads Unit<br><br>Petition # |

**ORANGE COUNTY**
**BOARD OF COMMISSIONERS**

**ACTION AGENDA ITEM ABSTRACT**
**Meeting Date:** December 7, 2015

**Action Agenda Item No.** 6-j

**SUBJECT:** Schools Adequate Public Facilities Ordinance (Schools APFO) – Approval of Membership and Capacity Numbers

**DEPARTMENT:** Planning

**PUBLIC HEARING: (Y/N)** No

**ATTACHMENT(S):**

1. Orange County Schools and Chapel Hill-Carrboro City Schools: Schools APFO Capacity Calculation and Change Request Form (includes Student Membership) for Elementary, Middle, and High School Levels
2. Chart Depicting LOS, Capacity, Membership, and Membership Increases

**INFORMATION CONTACT:**

Ashley Moncado, 919-245-2589
Perdita Holtz, 919-245-2578
Craig Benedict, 919-245-2575

**PURPOSE:** To consider approval of November 13, 2015 membership and capacity numbers for both school districts (Orange County and Chapel Hill-Carrboro City Schools) which will be used in developing 10-year student membership projections and the 2016 SAPFO Technical Advisory Committee (SAPFOTAC) Report.

**BACKGROUND:** In accordance with the Schools APFO MOUs (Memorandum of Understanding), the Board of County Commissioners shall approve the school districts' November 15th membership and capacity numbers within 15 school days after receiving the numbers from the school districts. Since November 15th fell on a Sunday this year, membership and capacity forms were updated based on Friday, November 13th membership and capacity numbers. Both Orange County Schools and Chapel Hill-Carrboro City Schools submitted their membership and capacity numbers in accordance with the MOUs. As per the MOUs, this step of the SAPFO process entails only the approval of the student membership and capacity numbers.

The SAPFOTAC, comprised of representatives of both school systems and the Planning Directors of the County and Towns, is tasked to produce an annual report for the governing boards of each Schools APFO partner. The full annual SAPFOTAC report, which will include 10-Year student membership projections, will be completed in early 2016. The CAPS (Certificate of Adequate Public Schools) system is updated with actual membership and capacity figures after the BOCC approves the information submitted by the school districts.

The chart in Attachment 2 shows the Capacity and Membership for each school level in both school districts and the increase (or decrease) over the November 14, 2014 membership. It

also shows the Allowable Maximum Level of Service (LOS) as was agreed upon as part of the SAPFO MOU process and the Actual LOS based on November 13, 2015 membership numbers.

In recent years, Pre-K enrollment has been a topic of discussion with both school districts. However, SAPFO has not been amended to include Pre-K in the membership and capacity numbers. Therefore, Pre-K children are not included in the membership and capacity numbers reported.

**FINANCIAL IMPACT:** Precise financial impacts cannot be determined, but changes in projected growth in student membership for the next ten years is expected to result in higher future operating and capital budget requests.

**SOCIAL JUSTICE IMPACT:** The following Orange County Social Justice Goal is applicable to this agenda item:

- **GOAL: ENSURE ECONOMIC SELF-SUFFICIENCY**
  The creation and preservation of infrastructure, policies, programs and funding necessary for residents to provide shelter, food, clothing and medical care for themselves and their dependents.

Efforts to approve the November 13, 2015 membership and capacity numbers for both school districts will result in positive outcomes related to the above goal.

**RECOMMENDATION(S):** The Manager recommends the Board approve the November 13, 2015 Membership and Capacity numbers as submitted by each school district.

# School APFO Capacity, Membership and Change Request Form

**School District:** Chapel Hill-Carrboro City Schools

**SAPFO CAPS Year:** November 13, 2015 - November 14, 2016

**Capacity and Membership Submittal Date:** November 13, 2015

| Elementary School | Square Feet | 2011-2012 Requested Capacity | 2012-2013 Requested Capacity | 2013-2014 Requested Capacity | 2014-2015 Requested Capacity | 2015-2016 Requested Capacity | Justification Footnote # | Membership (referenced school year) |
|---|---|---|---|---|---|---|---|---|
| Carrboro | 60,832 | 533 | 533 | 533 | 533 | 533 | | 502 |
| Ephesus | 66,952 | 448 | 448 | 448 | 448 | 448 | | 440 |
| Estes Hills | 56,299 | 527 | 527 | 527 | 527 | 527 | | 485 |
| Glenwood | 50,764 | 423 | 423 | 423 | 538 | 538 | | 531 |
| FP Graham | 66,689 | 538 | 538 | 538 | 423 | 423 | | 454 |
| McDougle | 98,000 | 564 | 564 | 564 | 564 | 564 | | 499 |
| Rashkis | 95,729 | 585 | 585 | 585 | 585 | 585 | | 517 |
| Scroggs | 90,980 | 575 | 575 | 575 | 585 | 585 | | 505 |
| Seawell | 52,896 | 466 | 466 | 466 | 585 | 585 | | 525 |
| Morris Grove | 90,221 | 585 | 585 | 585 | 575 | 575 | | 558 |
| Northside | 99,500 | 0 | 0 | 585 | 466 | 466 | | 485 |
| **Total** | 828,862 | 5,244 | 5,244 | 5,829 | 5,829 | 5,829 | | 5,501 |

**Special Note(s):** 1. For the November 15, 2002 base year the board accepted the superintendent-certified capacities as part of the School Facilities Task Force review and 2003 Planners and School Representative Technical Advisory Committee Report. These capacities will remain effective until changed by (1) the School CIP or (2) an amended version of this form that is certified by the BOCC. 2. Due to November 15th falling on a Sunday this year, membership and capacity numbers shall be provided for Friday, November 13, 2015.

**Justification:**

**Capacity Certification:**

11/20/15

Superintendent Date

BOCC Chair Date

**Membership Certification:**

11/20/15

Superintendent Date

BOCC Chair Date

# School APFO Capacity, Membership and Change Request Form

**School District:** Chapel Hill-Carrboro City Schools

**SAPFO CAPS Year:** November 13, 2015 - November 14, 2016

**Capacity and Membership Submittal Date:** November 13, 2015

| Middle School | Square Feet | 2011-2012 Requested Capacity | 2012-2013 Requested Capacity | 2013-2014 Requested Capacity | 2014-2015 Requested Capacity | 2015-2016 Requested Capacity | Justification Footnote # | Membership (referenced school year) |
|---|---|---|---|---|---|---|---|---|
| Culbreth | 122,467 | 670 | 670 | 670 | 774 | 774 | | 716 |
| McDougle | 136,221 | 732 | 732 | 732 | 732 | 732 | | 689 |
| Phillips | 109,498 | 706 | 706 | 706 | 706 | 706 | | 642 |
| Smith | 128,764 | 732 | 732 | 732 | 732 | 732 | | 797 |
| **Total** | 496,950 | 2,840 | 2,840 | 2,840 | 2,944 | 2,944 | | 2,844 |

**Special Note(s):** 1. For the November 15, 2002 base year the board accepted the superintendent-certified capacities as part of the School Facilities Task Force review and 2003 Planners and School Representative Technical Advisory Committee Report. These capacities will remain effective until changed by (1) the School CIP or (2) an amended version of this form that is certified by the BOCC. 2. Due to November 15th falling on a Sunday this year, membership and capacity numbers shall be provided for Friday, November 13, 2015.

**Justification:**

**Capacity Certification:**

11/20/15

Superintendent Date

BOCC Chair Date

**Membership Certification:**

11/20/15

Superintendent Date

BOCC Chair Date

# School APFO Capacity, Membership and Change Request Form

**School District:** Chapel Hill-Carrboro City Schools

**SAPFO CAPS Year:** November 13, 2015 - November 14, 2016

**Capacity and Membership Submittal Date:** November 13, 2015

| High School | Square Feet | 2011-2012 Requested Capacity | 2012-2013 Requested Capacity | 2013-2014 Requested Capacity | 2014-2015 Requested Capacity | 2015-2016 Requested Capacity | Justification Footnote # | Membership (referenced school year) |
|---|---|---|---|---|---|---|---|---|
| Chapel Hill | 241,111 | 1,520 | 1,520 | 1,520 | 800 | 800 | | 824 |
| East Chapel Hill | 259,869 | 1,515 | 1,515 | 1,515 | 1,520 | 1,520 | | 1,471 |
| Carrboro | 148,023 | 800 | 800 | 800 | 1,515 | 1,515 | | 1,373 |
| Phoenix Acad. | 5,207 | 40 | 40 | 40 | 40 | 40 | | 33 |
| **Total** | 654,210 | 3,875 | 3,875 | 3,875 | 3,875 | 3,875 | | 3,701 |

**Special Note(s):** 1. For the November 15, 2002 base year the board accepted the superintendent-certified capacities as part of the School Facilities Task Force review and 2003 Planners and School Representative Technical Advisory Committee Report. These capacities will remain effective until changed by (1) the School CIP or (2) an amended version of this form that is certified by the BOCC. 2. Due to November 15th falling on a Sunday this year, membership and capacity numbers shall be provided for Friday, November 13, 2015.

**Justification:**

**Capacity Certification:**

Thomas Forcella 11/20/15

Superintendent Date

BOCC Chair Date

**Membership Certification:**

Thomas Forcella 11/20/15

Superintendent Date

BOCC Chair Date

# School APFO Capacity, Membership and Change Request Form

**School District:** Orange County Schools

**SAPFO CAPS Year:** November 13, 2015 - November 14, 2016

**Capacity and Membership Submittal Date:** November 13, 2015

| Elementary School | Square Feet | 2011-2012 Requested Capacity | 2012-2013 Requested Capacity | 2013-2014 Requested Capacity | 2014-2015 Requested Capacity | 2015-2016 Requested Capacity | Justification Footnote # | Membership |
|---|---|---|---|---|---|---|---|---|
| Cameron Park | 70,812 | 565 | 565 | 565 | 565 | 565 | | 609 |
| Central | 52,492 | 455 | 455 | 455 | 455 | 455 | | 319 |
| Efland Cheeks | 64,316 | 497 | 497 | 497 | 497 | 497 | | 428 |
| Grady Brown | 74,016 | 544 | 544 | 544 | 544 | 544 | | 486 |
| Hillsborough | 51,106 | 471 | 471 | 471 | 471 | 471 | | 466 |
| New Hope | 100,164 | 586 | 586 | 586 | 586 | 586 | | 621 |
| Pathways | 85,282 | 576 | 576 | 576 | 576 | 576 | | 389 |
| **Total** | **498,188** | **3,694** | **3,694** | **3,694** | **3,694** | **3,694** | | **3,318** |

**Special Note(s):** 1. For the November 15, 2002 base year the board accepted the superintendent-certified capacities as part of the School Facilities Task Force review and 2003 Planners and School Representative Technical Advisory Committee Report. These capacities will remain effective until changed by (1) the School CIP or (2) an amended version of this form that is certified by the BOCC. 2. Due to November 15th falling on a Sunday this year, membership and capacity numbers shall be provided for Friday, November 13, 2015.

**Justification:**

**Capacity Certification:**

11/19/15

Superintendent Date

BOCC Chair Date

**Membership Certification:**

11/19/15

Superintendent Date

BOCC Chair Date

# School APFO Capacity, Membership and Change Request Form

**School District:** Orange County Schools

**SAPFO CAPS Year:** November 13, 2015 - November 14, 2016

**Capacity and Membership Submittal Date:** November 13, 2015

| Middle School | Square Feet | 2011-2012 Requested Capacity | 2012-2013 Requested Capacity | 2013-2014 Requested Capacity | 2014-2015 Requested Capacity | 2015-2016 Requested Capacity | Justification Footnote # | Membership |
|---|---|---|---|---|---|---|---|---|
| A.L. Stanback | 136,000 | 740 | 740 | 740 | 740 | 740 | | 635 |
| C.W. Stanford | 107,620 | 726 | 726 | 726 | 726 | 726 | | 654 |
| Gravelly Hill | 123,000 | 700 | 700 | 700 | 700 | 700 | | 450 |
| **Total** | **366,620** | **2,166** | **2,166** | **2,166** | **2,166** | **2,166** | | **1,739** |

**Special Note(s):** 1. For the November 15, 2002 base year the board accepted the superintendent-certified capacities as part of the School Facilities Task Force review and 2003 Planners and School Representative Technical Advisory Committee Report. These capacities will remain effective until changed by (1) the School CIP or (2) an amended version of this form that is certified by the BOCC. 2. Due to November 15th falling on a Sunday this year, membership and capacity numbers shall be provided for Friday, November 13, 2015.

**Justification:**

**Capacity Certification:**

11/19/15

Superintendent Date

BOCC Chair Date

**Membership Certification:**

11/19/15

Superintendent Date

BOCC Chair Date

# School APFO Capacity, Membership and Change Request Form

**School District:** Orange County Schools

**SAPFO CAPS Year:** November 13, 2015 - November 14, 2016

**Capacity and Membership Submittal Date:** November 13, 2015

| High School | Square Feet | 2011-2012 Requested Capacity | 2012-2013 Requested Capacity | 2013-2014 Requested Capacity | 2014-2015 Requested Capacity | 2015-2016 Requested Capacity | Justification Footnote # | Membership |
|---|---|---|---|---|---|---|---|---|
| Orange | 213,509 | 1,518 | 1,399 | 1,399 | 1,399 | 1,399 | | 1,298 |
| Cedar Ridge | 206,900 | 1,000 | 1,000 | 1,000 | 1,000 | 1,000 | | 1,140 |
| Partnership | 6,600 | 40 | 40 | 40 | 40 | 40 | | 31 |
| **Total** | **427,009** | **2,558** | **2,439** | **2,439** | **2,439** | **2,439** | | **2,469** |

**Special Note(s):** 1. For the November 15, 2002 base year the board accepted the superintendent-certified capacities as part of the School Facilities Task Force review and 2003 Planners and School Representative Technical Advisory Committee Report. These capacities will remain effective until changed by (1) the School CIP or (2) an amended version of this form that is certified by the BOCC. 2. The 2012-2013 capacity numbers for Orange High School (1,399) is based on a capacity analysis and facilities study completed by the Department of Public Instruction in August 2012. 3. Due to November 15th falling on a Sunday this year, membership and capacity numbers shall be provided for Friday, November 13, 2015.

**Justification:**

**Capacity Certification:**

11/19/15

Superintendent Date

BOCC Chair Date

**Membership Certification:**

11/19/15

Superintendent Date

BOCC Chair Date

Attachment 2

## School LOS, Capacity, Membership, and Membership Increases

| | ***Chapel Hill/Carrboro School District*** | | ***Orange County School District*** | |
|---|---|---|---|---|
| | Allowable Maximum LOS (per MOU) | Actual 2015-16 LOS | Allowable Maximum LOS (per MOU) | Actual 2015-16 |
| ***Elementary*** | 105% | 94.4% | 105% | 89.8% |
| ***Middle*** | 107% | 96.6% | 107% | 80.3% |
| ***High*** | 110% | 95.5% | 110% | 101.2% |

| | ***Chapel Hill/Carrboro School District*** | | | | | ***Orange County School District*** | | | | |
|---|---|---|---|---|---|---|---|---|---|---|
| | Capacity At 100% LOS* | Capacity At MOU LOS Maximum* | Nov. 13 2015 Membership | Prior Year Membership | Increase from Prior Year | Capacity At 100% LOS* | Capacity At MOU LOS Maximum* | Nov. 13 2015 Membership | Prior Year Membership | Increase from Prior Year |
| ***Elementary*** | 5829 | 6120 | 5501 | 5541 | (40) | 3694 | 3879 | 3318 | 3259 | 59 |
| ***Middle*** | 2944 | 3150 | 2844 | 2861 | (17) | 2166 | 2318 | 1739 | 1762 | (23) |
| ***High*** | 3875 | 4263 | 3701 | 3730 | (29) | 2439 | 2683 | 2469 | 2502 | (33) |

* - Class size ratio is 1:21 in grades K-3.

**ORANGE COUNTY**
**BOARD OF COMMISSIONERS**
**ACTION AGENDA ITEM ABSTRACT**
**Meeting Date:** December 7, 2015

**Action Agenda Item No.** 6-k

**SUBJECT:** Text Amendment to the Joint Planning Agreement – Revise Existing Language Regarding Transition Area Resident Representation of the Chapel Hill Planning Commission and Board of Adjustment

**DEPARTMENT:** Planning and Inspections **PUBLIC HEARING: (Y/N)** No

**ATTACHMENT(S):**

1. Resolution of Approval
2. Minutes from October 15, 2015 Joint Public Hearing
3. Excerpt of Minutes from November 4, 2015 Planning Board Meeting

**INFORMATION CONTACT:**

Perdita Holtz, Planner III, 245-2578
Craig Benedict, Planning Director, 245-2592

**PURPOSE:** To receive the Planning Board's recommendation and consider an amendment to the Joint Planning Agreement proposed by the Town of Chapel Hill regarding Transition Area resident representation on the Town's Planning Commission and Board of Adjustment.

**BACKGROUND:** The proposed amendments were heard at the October 15, 2015 joint planning public hearing. Materials from the hearing, which include additional background material, are available at: http://www.orangecountync.gov/document_center/BOCCAgendaMinutes/151015E.pdf and minutes from the hearing are included in Attachment 2. The Town of Chapel Hill proposed two options for consideration:

- Option A, recommended by the Town's Planning Commission, would replace the Transition Area seat with a Town of Chapel Hill resident. The ETJ (Extraterritorial Jurisdiction) seat would remain since it is required by Statutes but it could be designated to represent both the ETJ and Transition Area (although the representative would have to reside in the ETJ in order to be in compliance with Statutes).
- Option B would replace the Transition Area seat with either an ETJ or Transition Area resident who would represent both types of areas. The Board of County Commissioners (BOCC) would have 90 days to appoint a representative, after which the seat could be filled by the Town Council with a Chapel Hill resident. The BOCC would have the opportunity to request more time to fill a vacancy if an appointment could not be made within 90 days. This seat would be in addition to the statutorily required ETJ seat.

Orange County's Planning Board considered this item at its November 4th meeting. Planning Board meeting materials, including Orange County Planning Staff's synopsis of main points, the Town of Chapel Hill's PowerPoint presentation used at the hearing, and a resident comment received are available for viewing at:

http://www.orangecountync.gov/PB_Full_Agenda_Package_110415.pdf. The Planning Board voted (6-2) to recommend approval of Option B. An excerpt of minutes from the Planning Board meeting are included in Attachment 3.

Amendments to the Joint Planning Agreement require a joint public hearing and approval by the three governing boards of the jurisdictions that are parties to the agreement. The Town of Chapel Hill's Council considered the matter on November 9th and approved Option B on its Consent agenda. The Town of Carrboro's Board of Aldermen considered the matter on November 24th and unanimously voted to approve Option B.

**FINANCIAL IMPACT:** Necessary work has been accomplished using existing local government staff. Enactment of the amendments is not expected to have a direct financial impact on the local governments.

**SOCIAL JUSTICE IMPACT:** The following Social Justice Goal is applicable to this item:

> **GOAL: ENABLE FULL CIVIC PARTICIPATION**
> Ensure that Orange County residents are able to engage government through voting and volunteering by eliminating disparities in participation and barriers to participation.

**RECOMMENDATION(S):** The Manager recommends the Board:

1. Receive the Planning Board's recommendation; and
2. Adopt the Resolution in Attachment 1 which approves "Option B".

Attachment 1

Resolution # ___2015-066_____

**ORANGE COUNTY BOARD OF COUNTY COMMISSIONERS**

**A RESOLUTION AMENDING THE JOINT PLANNING AGREEMENT REGARDING TRANSITION AREA RESIDENT REPRESENTATION ON THE TOWN OF CHAPEL HILL'S PLANNING COMMISSION AND BOARD OF ADJUSTMENT**

WHEREAS, Orange County, the Town of Chapel Hill, and the Town of Carrboro entered into a Joint Planning Agreement originally dated September 22, 1987 and amended from time to time, and

WHEREAS, the Joint Planning Agreement calls for Transition Area resident representation on the two Towns' Planning Board/Commission and Board of Adjustment, and

WHEREAS, on October 15, 2014, the Town of Chapel Hill enacted an Ordinance expanding the Town's Extraterritorial Jurisdiction (ETJ) area by reducing the Joint Planning Area (JPA), and

WHEREAS, the Town of Chapel Hill has proposed amendments to the Joint Planning Agreement regarding Transition Area resident representation on its Planning Commission and Board of Adjustment, and

WHEREAS, a joint public hearing regarding the proposed Joint Planning Agreement amendments was held on October 15, 2015, in accordance with the requirements of the Joint Planning Agreement, and

NOW THEREFORE, the Board of Commissioners of Orange County hereby resolves that the Joint Planning Agreement be amended as follows:
(Underline indicates proposed new text, strike through indicates proposed deleted text)

**Section 2.7 Representation of Transition Area Residents**

Chapel Hill: Chapel Hill shall revise its Land Use Development Ordinance to provide that in addition to one Extraterritorial Jurisdiction representative on the Planning Board and Board of Adjustment that the County Commission appoints one additional representative from the Joint Planning Area or the Extraterritorial Jurisdiction. If an appointment by the County Commission is unable to be secured within 90 days of a vacancy, the Town Council may fill the vacant seat with a Chapel Hill resident. Chapel Hill shall notify Orange County of any vacancies for which Orange County is to make an appointment, within ten days of a vacancy. At the request of the County Commission, the Town Council may extend the 90 day time limit.

Carrboro: Carrboro shall revise its Land Use Ordinance to provide that at least one resident of Town's Transition area shall be appointed to the Town's respective planning board and board of adjustment, in the same manner as representation of extraterritorial planning area residents is provided for in the Town's ordinance.

**(DELETED TEXT)**
**Section 2.7 Representation of Transition Area Residents**

~~Chapel Hill shall revise its Land Development Ordinance and Carrboro shall revise its Land Use Ordinance to provide that at least one resident of each town's respective Transition area shall be appointed to each town's respective planning board and board of adjustment, in the same manner as representation of extraterritorial planning area residents is provided for in each Town's ordinance.~~

BE IT FURTHER RESOLVED THAT the amendments to the Joint Planning Agreement shall become effective upon adoption by the governing bodies of Orange County, Chapel Hill, and Carrboro.

Upon motion of Commissioner _____, seconded by Commissioner _____, the foregoing resolution was adopted this _____ day of _____, 2015.

I, Donna S. Baker, Clerk to the Board of Commissioners for Orange County, DO HEREBY CERTIFY that the foregoing is a true copy of so much of the proceedings of said Board at a meeting held on _____, 2015 as relates in any way to the adoption of the foregoing and that said proceedings are recorded in the minutes of the said Board.

WITNESS my hand and the seal of said County, this _____ day of _____, 2015.

SEAL

_____
Clerk to the Board of Commissioners

Attachment 2

**APPROVED 11/17/2015**

**MINUTES**
**ORANGE COUNTY BOARD OF COMMISSIONERS**
**CHAPEL HILL TOWN COUNCIL**
**CARRBORO BOARD OF ALDERMEN**
**October 15, 2015**
**JOINT PLANNING AREA (JPA) PUBLIC HEARING**

The Orange County Board of Commissioners met with the Towns of Chapel Hill and Carrboro for a Joint Planning Area (JPA) public hearing on Thursday, October 15, 2015 at 7:00 p.m. at the Southern Human Services Center in Chapel Hill, N.C.

**COUNTY COMMISSIONERS PRESENT:** Chair Earl McKee and Commissioners Mia Burroughs, Barry Jacobs, Bernadette Pelissier and Penny Rich
**COUNTY COMMISSIONERS ABSENT:** Commissioner Dorosin and Commissioner Price
**COUNTY ATTORNEYS PRESENT:** Staff Attorney Annette Moore
**COUNTY STAFF PRESENT:** County Manager Bonnie Hammersley, Deputy County Manager Travis Myren and Clerk to the Board Donna Baker (All other staff members will be identified appropriately below)
**CHAPEL HILL TOWN COUNCIL MEMBERS/STAFF PRESENT**: Mayor Mark Kleinschmidt, Jim Ward, Lee Storrow, George Cianciolo, Maria Palmer, Sally Greene and Town Manager Roger Stancil
**CHAPEL HILLTOWN COUNCIL MEMBERS ABSENT:** Council Member Donna Bell and Council Member Ed Harrison
**CARRBORO BOARD OF ALDERMEN MEMBERS/STAFF PRESENT:** Mayor Lydia Lavelle, Aldermen Damien Seils, Jacquelyn Gist, Randee Haven O'Donnell, Sammy Slade, Bethany Chaney and Town Manager David Andrews
**CARRBORO BOARD OF ALDERMEN MEMBERS ABSENT:** Alderman Michelle Johnson

Chair McKee called the meeting to order at 7:03 p.m.

**A. OPENING REMARKS FROM THE CHAIR AND MAYORS**

Mayor Lavelle said Alderman Johnson was not feeling well and might arrive late.

Mayor Kleinschmidt said Council Members Harrison and Bell would not be attending.

Chair McKee said that Commissioner Dorosin and Commissioner Price had conflicts and would not be attending tonight.

**B. PUBLIC CHARGE**

*Chair McKee dispensed with the reading the Public Charge.*

**C. PUBLIC HEARING ITEMS**

1. **Text Amendments to the Joint Planning Agreement** – Consider revisions to existing language regarding Transition Area resident representation on the Town of Chapel Hill's Planning Commission and Board of Adjustment.

Mayor Kleinschmidt reviewed the following background information:

**PURPOSE:**

To receive public comment on two proposed options to amend the Joint Planning Agreement to revise existing language regarding Transition Area resident representation on the Town of Chapel Hill's Planning Commission and Board of Adjustment.

**BACKGROUND:**

In the mid-1980s Orange County and the Towns of Chapel Hill and Carrboro adopted a Joint Planning Land Use Plan and accompanying Agreement that provided land use planning for the area of the county commonly referred to as the Rural Buffer and for areas designated as "Transition Areas" adjacent to the Towns of Chapel Hill and Carrboro. Transition Areas were defined as areas in transition from rural to urban and were projected to be provided with urban services (public utilities and other town services). The full plan and agreement is available at: http://orangecountync.gov/planning/Documents.asp.

In October 2014, the Town of Chapel Hill enacted an Extraterritorial Jurisdiction (ETJ) expansion ordinance that changed most of the Town's designated Transition Area to ETJ. Because there is relatively little Chapel Hill Transition Area remaining, the Town of Chapel Hill has proposed two options for potential amendments to the Joint Planning Agreement regarding Transition Area resident representation on its Planning Commission and Board of Adjustment. The attached Town staff report provides further details on the options. Amendments to the Joint Planning Agreement require a joint public hearing and approval by the three governing boards of the jurisdictions that are parties to the agreement.

Gene Poveromo, Town of Chapel Hill Planning Department Development Manager, made the following PowerPoint presentation:

**October 15, 2015**
**Joint Public Hearing**

**Amending the Joint Planning Area Agreement**
**Recommendation**

- Consider the amendment
- Continue the Public Hearing
  - Chapel Hill Town Council
    - November 11
  - Carrboro Board of Aldermen
    - November 24
  - Board of Orange County Commissioners
    - December 7

**Joint Planning Area Agreement Amending JPA Resident Membership on Town of Chapel Hill**

- Planning Board
- Board of Adjustment
- JPA Resident Membership
- *"…at least on resident of each town's respective Transition area shall be appointed …planning board and board of adjustment…"*
- *TRANSITION AREA = JOINT PLANNING AREA*

**Chapel Hill Planning Jurisdiction (map)**

**Chapel Hill Planning Commission Recommendation**

- Amend the JPA Agreement and replace the JPA seat on the Planning Commission and Board of Adjustment with a Chapel Hill resident seat
- Planning Commission

- "…current ETJ/JPA population (6.7%) as compared to current Planning Commission member percentage (22%)."

**Other Options…**

- Make no changes to membership…retain JPA seat on Planning Commission & Board of Adj.

**Another Option…**

- Change the JPA seat to an ETJ or JPA seat
  - County Commission appointment
- Seat can be filled by a Chapel Hill Resident if unfilled for 90 days
  - Town Council appointment

**Recommendation**

- Consider the amendment
- Continue the Public Hearing
  - Chapel Hill Town Council
    - November 11
  - Carrboro Board of Aldermen
    - November 24
  - Orange County Commission
    - December 7

Town Council Member Palmer said the slides did not reflect the current membership that shows the enormous contrast between the less than 1 percent of the population being in the joint planning area, yet being 20 percent of the representation on the Planning Board.

Mayor Kleinschmidt said if another column was added to show the percentage of representation on the Chapel Hill Planning Commission and Board of Adjustment, a huge disparity would be evident between the population and the representation.

Alderman Seils asked if the Chapel Hill Planning Commission had permitting issuing authority.

Mayor Kleinschmidt said this Commission is a quasi-judicial group, depending on the type of permit that is being sought.

Alderman Seils said the Carrboro Planning Board does not have such authority.

**PUBLIC COMMENT:**

Debbie Masquela read an email that she had sent to all boards:

"I live in the JPA Chapel Hill map area. I would like to suggest a good compromise on the Option B for the Joint Planning Area Membership. Please consider this compromise.
If we are to use Option B but to retain the title on the individual seats on the Chapel Hill Planning Commission and Chapel Hill Board of Adjustment as having JPA/ETJ status. Which means the persons filling those seats, if they do remain vacant after 90 days of being available to JPA or ETJ residents, those people would be responsible to represent the interests of JPA/ETJ residents. The seat would retain their titles as JPA/ETJ representatives, even if after this 90-day vacant period lapsed and the seats were then filled by Chapel Hill residents.

If you do not agree with this compromise, I, plus my neighbors would like to know why we would be denied this representation in our own Town's government; and not just because we are outnumbered in population and acreage. Our countryside landscapes of rolling hills of farms, woods, forest, fields, creeks, streams, ponds add immeasurably to the aesthetic value and harmony of our Chapel Hill Community as a whole. These peaceful lands cannot be held in comparison to the Town's lands that are weaved with shops, traffic lights, cookie cutter neighborhoods upon a mixture of asphalt and cement. JPA/ETJ areas are greatly different in

form, and function than Chapel Hill In-Town Limits. The interests and environments of the JPA/ETJ people need to have their own representative, because unless you live there, you just don't get it and you won't understand what we want and why we want it."

Debbie Mesquela asked for her comments to be put on the Chapel Hill website. She said the request is that the names of the seats remain the same, and whoever holds these seats would represent the needs of the JPA/ETJ.

Mayor Kleinschmidt clarified that the only seat to be eliminated was the JPA seat, which would be replaced with a Chapel Hill resident. He said the ETJ seat would remain the same.

Commissioner Jacobs said the proposal from Chapel Hill is reasonable, and the County has a similar process for addressing seats that are vacant for 180 days. He suggested a period between 90 to 180 days.

Mayor Kleinschmidt said that suggestion is different than the Town of Chapel Hill's Planning Commission's recommendation.

Alderman Chaney asked if two seats would be reduced to one seat and would represent this small percentage of the population.

Mayor Kleinschmidt said yes.

Commissioner Rich clarified that the ETJ position would not be done away with, but rather the JPA seat would be combined, or if it goes unfilled by an ETJ/JPA person in a specified time period, that the seat would go to a Chapel Hill resident.

Mayor Kleinschmidt said the Planning Commission's recommendation is to morph the JPA seat into a Chapel Hill resident seat, but there are other options to consider and he reviewed them.

Commissioner Rich asked if the Planning Commission has a definite number of membership slots or can the numbers be increased.

Gene Poveromo said State statute requires that there be at least one person from the ETJ on Board of Adjustment and Chapel Hill Planning Commission. He said the Planning Commission is made up of nine members, and the JPA agreement says there must be one JPA position.

Town Council Member Palmer said Commissioner Jacobs' suggestion of 180 days is a long time and explained the appointment process and Advisory Board schedules. She said even the 90 days could be problematic. She said there are only 298 residents that live in the JPA area, which is a small number from which to find a representative to serve on these boards.

Councilman Ward said he believed that the JPA still needs representation, and he supports the "another option" choice.

Gene Poveromo said there is one seat dedicated to the ETJ, and it would be possible to have a second ETJ seat.

Councilman Ward asked if it is possible to transform the remaining ETJ seat into one that could also be filled by a JPA resident.

Mayor Kleinschmidt said that is not be possible, because there must be an ETJ representative.

Mayor Kleinschmidt said another option would be to consider bringing the small JPA area into the ETJ or releasing it to the County. He said the latter option would be a longer process.

Mayor Kleinschmidt said when this was created years ago, there was a lot more transition area and a lot more residents in the JPA area.

Councilman Ward said he hoped that if the shorter time frame was chosen, Chapel Hill would be able to help Orange County fill these positions as the Board should be fully staffed with membership. He said a time extension could be requested if need be.

Alderman Slade asked if this potential change would affect Carrboro.

Gene Poveromo said the proposal does not include changing Carrboro's jurisdiction.

Commissioner Jacobs suggested that Ms. Masquela could apply for this position through the Orange County Clerk's office.

Mayor Kleinschmidt referenced the recommendation below and said all three elected boards will discuss and recommend an option from their entity by the suggested dates below, or whenever they chose to do so.

**RECOMMENDATION:**
The Planning Staffs recommend that the governing boards:
1. Hear public comment on the proposed options to amend the Joint Planning Agreement.
2. Close the public hearing.
3. Refer the matter to the local governments for decision in accordance with the following schedule:

a. Orange County
Orange County Planning Board for recommendation – November 4, 2015
Board of County Commissioners for possible action – December 7, 2015

b. Chapel Hill
Chapel Hill Planning Board for recommendation – done on September 1, 2015
Town Council for possible action – November 11, 2015

c. Carrboro
Carrboro Planning Board for recommendation – November 5, 2015
Board of Aldermen for possible action – November 10 or 24, 2015

**ADJOURNMENT OF JOINT PUBLIC HEARING**

The Joint Public Hearing was adjourned at 7:36 p.m.

VOTE: UNANIMOUS

*The Town of Chapel Hill left at 7:36 p.m.*

Attachment 3

DRAFT

Excerpt of Draft Minutes

# MINUTES
## PLANNING BOARD
## NOVEMBER 4, 2015
## REGULAR MEETING

MEMBERS PRESENT: Peter Hallenbeck (Chair), Cheeks Township Representative; Lydia Wegman (Vice Chair), At-Large Chapel Hill Township; Lisa Stuckey, Chapel Hill Township Representative; James Lea, Cedar Grove Township Representative; Tony Blake, Bingham Township Representative; Paul Guthrie, At-Large Chapel Hill Township; Andrea Rohrbacher, At-Large Chapel Hill Township; Maxecine Mitchell, At-Large Bingham Township; Buddy Hartley, Little River Township Representative;

MEMBERS ABSENT: Laura Nicholson, Eno Township Representative; Herman Staats, At-Large;

STAFF PRESENT: Craig Benedict, Planning Director; Michael Harvey, Current Planning Supervisor, Perdita Holtz, Special Projects Coordinator, Ashley Moncado, Special Projects Planner, Meredith Pucci, Administrative Assistant II

AGENDA ITEM 1: CALL TO ORDER

**********

AGENDA ITEM 8: JOINT PLANNING AGREEMENT AMENDMENT: To make a recommendation to the BOCC on amendments to the text of the Joint Planning Agreement initiated by the Town of Chapel Hill regarding membership of Transition Area residents on the Town's Planning Commission and Board of Adjustment. This item was heard at the October 15, 2015 Joint Planning Public Hearing.

PRESENTER: Perdita Holtz, Planning Systems Coordinator

Note: Peter Hallenbeck (Chair) left the meeting for a prior engagement and turned the meeting over to Lydia Wegman (Vice Chair)

Perdita Holtz reviewed the abstract.

Paul Guthrie: A number of years ago the County Board of Commissioners sent my name to the Town of Chapel Hill to represent the ETJ and rather than appoint me the Town of Chapel Hill's Planning Department redistributed the seats and eliminated the position that I would have been in without any consultation with the County. I like option B but one thing that should be done is to make sure they can't play games with that procedure.

Tony Blake: I think it's very important that people from the neighborhoods be represented well on these boards. Chapel Hill has been doing away with affordable housing and they seem to be pushing that responsibility more and more on the county.

Lisa Stuckey: So by state law the ETJ areas have to be represented by at least one person and that person is appointed by the county commissioners, so we are talking about 200 acres and whether or not there should be an appointed person to represent the two purple areas?

Perdita Holtz: Yes, although it would be ETJ or Transition Area resident.

Tony Blake: It's just to give them a bigger pool of people to choose from.

Lisa Stuckey: ETJ is still under 7% of the population and has 2/9 of the representation, I kind of get why it's a problem. I don't think they need one person for the two purple areas.

Tony Blake: I'm interested in the additional representation because I think there are some very critical decisions coming up in those areas.

Andrea Rohrbacher: I am tending towards what Lisa said. I don't think we need the two seats. I think the one seat would be adequate.

Lydia Wegman: Paul wanted to speak so after he speaks we will go around and hear from everybody.

Paul Guthrie: I personally don't think that one or two makes a lot of difference. I have lived in the ETJ for eleven years and I have never had any communication on anything they are doing in that district. They do not communicate at all so it seems to me that one of the issues is going well beyond what we are talking about.

Lydia Wegman: So that sounds like something we will want to convey potentially to the Town of Chapel Hill.

Perdita Holtz: It will be a part of the minutes and the BOCC reads those minutes and they might want to bring it up at one of the joint meetings they have.

Lydia Wegman: Okay so let's go around, Buddy you can start.

Buddy Hartley: I'm okay with option B.

Paul Guthrie: I think I've said about all I need to say. When it comes time to vote I'll support option B. I do think it's a bigger issue than just this issue.

James Lea: Are we up for a vote on this tonight?

Lydia Wegman: I think we are supposed to make a recommendation to the BOCC in time for their December meeting.

James Lea: Based on what I have heard I think option B is a great option.

Maxecine Mitchell: I had a personal experience when a decision was being made in my area and we left feeling that we were not represented. We went to Carrboro and Chapel Hill and it seemed like they didn't really care. I can understand where Paul is coming from. I would support option B.

Lisa Stuckey: I am sticking with option A. I think one person for 6.7% is sufficient.

Andrea Rohrbacher: I am going to stick with option A for the same reason. I would like to also ask that both the Board of County Commissioners and the Town of Chapel Hill be more proactive in recruiting in these areas.

Tony Blake: I'm going to go with option B from the same reasons I stated and exactly for the reasons Paul and Maxecine said.

Lydia Wegman: I can see the virtues of option B and I would support option B for the reasons that have been previously stated.

MOTION made by Tony Blake to recommend Option B to the County Commissioners. James Lea seconded.
VOTE: 6 – 2 (Lisa Stuckey and Andrea Rohrbacher opposed)

**********

**ORANGE COUNTY**
**BOARD OF COMMISSIONERS**
**ACTION AGENDA ITEM ABSTRACT**
**Meeting Date:** December 7, 2015

**Action Agenda Item No.** 7-a

**SUBJECT:** Major Subdivision Preliminary Plat Application – Henderson Woods

**DEPARTMENT:** Planning and Inspections **PUBLIC HEARING: (Y/N)** No

**ATTACHMENTS:**

1. Preliminary Plat Application Package
2. Property and Vicinity Map
3. Staff Generated Correspondence
4. Notes from April 7, 2015 Neighborhood Information Meeting.
5. Excerpt of Approved June 3, 2015 Planning Board Meeting Minutes
6. Excerpt of Approved October 7, 2015 Planning Board Meeting Minutes
7. Resolution of Approval

*UNDER SEPARATE COVER*
8. *Henderson Woods Maps*

**INFORMATION CONTACT:**

Patrick Mallett, Planner II, (919) 245-2577
Michael D. Harvey, Planner III, (919) 245-2597
Craig Benedict, Director, (919) 245-2575

**PURPOSE:** To receive the Planning Board recommendation, review, and make a decision on a Major Subdivision Preliminary Plat application proposing a 19 lot single-family residential subdivision in accordance with the provisions of Section 2.15 and Article 7 *Subdivisions* of the Unified Development Ordinance (UDO).

**BACKGROUND:** The basic facts concerning the application are as follows:

Applicant(s)/Agents: Dr. Thomas Humphries and
Tom Hefner, Hefner Properties
1020 New Hope Church Road
Chapel Hill, NC 27516

Owners: Humphries Family LLC
4712 Whitfield Road
Durham, NC 27707

Henderson Woods Inc.
6315 Howie Mine Church Road
Waxhaw, NC 28173

Location: Intersection of Whitfield Road and Erwin Road. Please refer to Attachment 2 for a map of the parcel.

Parcel Information:

a. **PINs**: 9891-80-0703 and 9891-60-4884.
b. **Size of parcel**: 48 acres in area total.
c. **Zoning of parcels**: Rural Buffer (RB).

d. **Township**: Chapel Hill.

e. **School District**: Chapel Hill - Carrboro Schools.

f. **Future Land Use Map Designation**: Rural Buffer.

g. **Growth Management System Designation**: Rural Designated.

h. **Joint Land Use Plan Designation**: Rural Buffer – Rural Residential Area.

i. **Existing Conditions/Physical Features**: Varying topography with a pond, meadows and heavy vegetation, primarily mixed hardwoods, throughout.

There are jurisdictional and non-jurisdictional streams running through the property. The property is not encumbered by floodplain.

The property has been evaluated for jurisdictional wetlands. Potential areas have been flagged and are pending final determination by the US Army Corps of Engineers (USACE).

j. **Roads**: Vehicular access to the parcel is proposed via Whitfield Road. The subdivision will be served by 3 public streets to be named, "Martin Madden Way, Henderson Woods Lane and Shakori Trail."

There is an existing private road through the property called Shakori Trail that serves two existing properties to the north. A portion of this existing private right-of-way will be converted into a public street terminating in a cul-de-sac along the eastern property.

There will be a gated access off of the cul-de-sac for those property owners to the north who desire to continue to use this as their access.

k. **Water and Sewer Service:** The property is not located within a primary public utility service area according to the Water and Sewer Management Planning Boundary Agreement (WASMPBA).

Proposed lots are to be served by individual well and septic systems.

<u>Surrounding Land Uses</u>:

a. **NORTH**: Single-family residences on lots ranging in size from 4 to 10 acres; property owned by Duke Forest approximately 232 acres in size all zoned RB.

b. **SOUTH**: Whitfield Road (SR 1731); single-family residences on property ranging in size from 1.5 to 5 acres all zoned RB.

c. **EAST**: Erwin Road (SR 1734); single-family residences on lots ranging in size from 0.7 to 5 acres all zoned RB. Note, some of these smaller lots were created prior to County zoning.

d. **WEST**: Single-family residences on lots ranging in size from 2.4 to 10 acres all zoned RB.

Development Process, Schedule, and Action: The typical cadence for the review of a major subdivision is as follows:

- FIRST ACTION – Submission of a concept plan application containing a proposed layout for the project based on a 'conventional' and 'flexible' development option.

  *STAFF COMMENT*: A completed application was received on February 20, 2015.

- SECOND ACTION – Planning staff schedules a Neighborhood Information Meeting to invite property owners within 500 feet of the subject property to view the proposal.

  *STAFF COMMENT*: Staff held the required meeting on April 7, 2015. Please refer to Attachment 4 for notes from this meeting.

- THIRD ACTION – The Planning Board shall review and make a recommendation on the Concept Plan Application making a decision on whether the proposed development should proceed as a 'conventional' or 'flexible' development.

  *STAFF COMMENT:* At its June 3, 2015 regular meeting the Board voted unanimously to approve the flexible development option for Henderson Woods.

  Agenda materials for this meeting can be viewed utilizing the following link: http://www.orangecountync.gov/PB_Agenda_Packet_June_2015.pdf. An excerpt of the minutes from the meeting is contained within Attachment 5.

- FOURTH ACTION – Once a concept plan option is approved, the Planning Board reviews and makes a recommendation on the approval of the Preliminary Plat for the project.

  *STAFF COMMENT*: The Planning Board reviewed the Preliminary Plat application at its October 7, 2015 regular meeting and voted unanimously to recommend approval.

  Agenda materials for this meeting can be viewed utilizing the following link: http://www.orangecountync.gov/Full_Agenda_Packet___PB_10_7_15.pdf. An excerpt of the minutes from the meeting is contained within Attachment 6.

- FIFTH ACTION – The BOCC reviews and takes action on the Preliminary Plat application.

  *STAFF COMMENT*: The BOCC is scheduled to begin review of this proposal at its December 7, 2015 regular meeting.

- SIXTH ACTION – If approved, and once all construction activities have been completed or appropriate financial assurances have been approved, staff will sign off on a Final Plat, which will be recorded in the Orange County Registrar of Deeds Office.

Proposal: The petitioner has submitted a Major Subdivision Preliminary Plat application proposing to develop a conservation cluster flexible development subdivision with 19 single-family residential lots with an overall density of 1 dwelling unit per every 2.52 acres of land area. A summary of the proposal is as follows:

| Subdivision Type | Number of Lots | Average Lot Size | Area in Open Space | Open Space Percentage |
|---|---|---|---|---|
| Flexible Development Plan | 19 | 1.22 acres | 21.5 acres | 44.9% |

The lots within the subdivision range in size from 1.0 acre (smallest) to 1.68 acres (largest) in area.

Staff has determined the Preliminary Plat application is consistent with the Concept Plan approved by the Planning Board at its June 3, 2015 regular meeting. Please refer to Attachment 4 for the minutes from this meeting.

*STAFF COMMENT:* The proposal is in accordance with the anticipated densities and minimum lots sizes for parcels located within:

- The Rural Buffer land use category as defined within the adopted Comprehensive Plan,
- Rural Designated areas of the County as denoted on the Growth Management Systems Map, and
- The Rural Buffer – Rural Residential Area land use category as defined within the Joint Planning Land Use Plan.

It should be remembered the clustering of lots is permitted in accordance with the provisions of the UDO as well as in Section 6, *Future Land Use – Joint Planning Area* of the Joint Planning Land Use Plan, which can be viewed utilizing the following link: http://orangecountync.gov/planning/documents/JPALUPDocument.pdf

Roads: The proposal involves the creation of three (3) new public roads (to be named "Martin Madden Way, Henderson Woods Lane and Shakori Trail") to service the subdivision. Each public road will constructed to NC Department of Transportation (DOT) standards. A five-foot (5') wide concrete sidewalk shall be constructed within and outside of identified road rights-of-way. Specifically, the proposal calls for:

- A single access road to be name Henderson Woods Lane will serve as the subdivision's main vehicular ingress/egress via Whitfield Road.
- Construction of two cul-de-sac roadways to be named "Martin Madden Way and Shakori Trail" will also be constructed within fifty-foot rights-of-way with 27-foot back-to back cross sections.

The Preliminary Plat indicates there will be two 20-foot wide shared driveway/truck turn areas within each cul-de-sac to accommodate the turn radius of larger vehicles. These dimensions comply with NCDOT and Orange County Solid Waste Management standards for residential subdivisions.

*STAFF COMMENT*: As previously indicated there is an existing private road running through the property called Shakori Trail serving existing properties to the north of the subdivision.

A portion of this existing right-of-way will be converted into a public street terminating in a cul-de-sac along the eastern property.

There will be a gated access off of the cul-de-sac for those property owners to the north who desire to continue to use this as their access. This area can also be utilized for emergency vehicle access if necessary.

Staff has determined that the proposed roadway construction and layout is consistent with the requirements of the UDO. Staff and NCDOT have also determined that the limited access to Erwin Road and the properties to the north are sufficient for services and emergency services.

Utilities – Water and Sewer: The applicant is proposing to serve the project with individual wells and septic systems developed on each lot. The Plan Sheet C-6 in Attachment 8 denotes anticipated locations for well and septic sites for the lots.

*STAFF COMMENT:* Orange County Environmental Health has indicated that they do did not foresee any potential problems with the proposed layout with respect to finding suitable soils to support septic tank development. For more information please refer to Attachment 3.

Stormwater Drainage: Drainage will be engineered according to Best Management Practices (BMP) at the time of permit application for construction and will be handled through a curb and gutter system located within the proposed road rights-of-way. The property is subject to adopted stormwater management guidelines.

The Preliminary Plat provides an assessment demonstrating the project will comply with established standards.

*STAFF COMMENT:* The applicant has submitted a preliminary stormwater analysis for staff review and comment. Stormwater and Erosion Control permits(s) will be required and submitted for this project prior to land disturbing activity.

Open Space: Open space for the project is broken down on Sheet C.1 in Attachment 8 of the submittal as follows:

- Primary Open Space (i.e. wetlands, streams, floodplains, slopes greater than 25%, natural areas/wildlife corridors, etc.) – 4.02 acres (175,111 square feet).
- Secondary Open Space (i.e. Open space access, woodlands, slopes between 15% and 25%, scenic views, etc.) – 17.49 acres ( 761,864 square feet) further broken down as:
    - Perimeter Buffer (100 feet in width): 12.61 acres
    - Woodlands/fields: 4.8 acres

The total area reserved as common open space is approximately 21.5 acres (44.9% of the site) composed of fields and forested areas with existing, mature, vegetation and trees with an approximate height of between 50 to 80 feet. All 19 lots are adjacent, and have access to, primary and/or secondary open space areas. Access to open space areas is also via the proposed five foot (5') wide concrete sidewalk running throughout the project.

*STAFF COMMENT:* Staff has determined the proposed open space meets the requirements of the UDO. Note: the applicant has also provided details regarding a gazeebo amenity within the active open space area along the pond.

Land Use Buffer: The Preliminary Plat indicates there will be a 30-foot Type "B" land use buffer along Erwin Road and Whitfield Road. The buffers are comprised of existing, dense, vegetation composed of existing, mature, shrubs and trees with an approximate height of between 50 to 70 feet.

*STAFF COMMENT:* Section 6.8.6 (D) of the UDO requires that this project maintain a thirty (30) foot land use buffer separating the project from adjacent roadways. Staff has determined the proposed open space and land use buffers meet the requirements of the UDO.

Additional Comments: Attachment 3 contains additional comments for this project, including:

- An e-mail from David Sykes, Orange County Emergency Management, indicating there is an existing pond in the area to address fire suppression issues.
- An e-mail from Jeff Scouten, Orange County Solid Waste, approving road layout and construction.

JPA Review: In accordance with the Joint Planning Area Agreement, this project was sent to the Town of Chapel Hill for review and comment on April 20, 2015. To date, Staff has not received any comments.

Analysis: As required under Section 2.15.2 (E) of the UDO, the Planning Director is required to: '*prepare and submit a recommendation'* on the concept plan to the Planning Board for consideration. In analyzing this request, the Planning Director offers the following:

1. The application has been deemed complete in accordance with the requirements of Section 2.2 and 2.15.2 of the UDO.
2. Staff has determined that the property is of sufficient size to support the proposed subdivision.
3. The proposal appears consistent with the various goals outlined within the Comprehensive Plan concerning development, including:
    a. Land Use Overarching Goal: *Coordination of the amount, location, pattern, and designation of future land uses, with availability of County services and facilities sufficient to meet the needs of Orange County's population and economy consistent with other Comprehensive Plan element goals and objectives.*
    b. Land Use Goal 2: *Land uses that are appropriate to on-site environmental conditions and features and that protect natural resources, cultural resources, and community character.*
    c. Land Use Goal 3: *A variety of land uses that are coordinated within a program and pattern that limits sprawl, preserves community and rural character, minimizes land use conflicts, supported by an efficient and balanced transportation system.*
4. Staff has determined that the proposed subdivision is consistent with the provisions and goals of the Joint Planning Land Use Plan and Joint Planning Agreement.

**FINANCIAL IMPACT:** Staff has determined the project would not require augmentation of County budgetary outlays to support services and that anticipated revenues from property taxes should supplement increases in cost.

**SOCIAL JUSTICE IMPACT:** The following Orange County Social Justice Goals is applicable to this agenda item:

**GOAL: ESTABLISH SUSTAINABLE AND EQUITABLE LAND-USE AND ENVIRONMENTAL POLICIES**

The fair treatment and meaningful involvement of people of all races, cultures, incomes and educational levels with respect to the development and enforcement of environmental laws, regulations, policies, and decisions. Fair treatment means that no group of people should bear a disproportionate share of the negative environmental consequences resulting from industrial, governmental and commercial operations or policies.

**RECOMMENDATION(S):** The Manager recommends the Board:

1. Receive the Planning Board and Planning Director's recommendation on the Preliminary Plat application for the Henderson Woods Subdivision;
2. Discuss the proposal as desired; and
3. Approve the Preliminary Plat as submitted and the Resolution of Approval contained in Attachment 7.

Attachment 1



# APPLICATION FOR PRELIMINARY PLAN APPROVAL
# MAJOR SUBDIVISION

**ORANGE COUNTY** 5/05

**PLEASE TYPE OR PRINT (INK ONLY)** **DATE:** _____

**SUBDIVISION NAME:** Henderson Woods

**LOCATION:** 605 Erwin Road

**OWNER/DEVELOPER:** Humphries Family, LLC & Henderson Woods, Inc.

**ADDRESS:** 4712 Whitfield Road / 6315 Howie Mine Church Rd **TELEPHONE NO.:** 919-929-0518

Durham, NC 27707 / Waxhaw, NC 28173

**AGENT/CONTACT:** Tom Heffner, Heffner Properties, Inc.

**ADDRESS:** 1020 New Hope Road **TELEPHONE NO.:** 919-929-0518

Chapel Hill, NC 27516

**A** **SUMMARY INFORMATION** Pin# 9891-80-0703 & 9891-60-4884

**Orange County Tax Map** _____ **Block** _____ **Lot(s)** _____ **Township** 7

**Zoning District(s):** RB - Rural Buffer

**Total Number of Acres:** 47.95

**Total Number of Lots:** 19 **Average Lot Size:** 1.2 AC **Minimum Lot Size:** 1.0 AC

**Number/Type of Structures: (existing)** 3 / house + 2 barns **(proposed)** 19 Single Family Homes

**Linear Feet in Streets:** 2,120 LF **Acres in Open Space:** 21.5 AC

**Water Supply:** _____ **Public (specify)** _____ **Community** X **Well Individual**

**Wastewater Disposal:** _____ **Public (specify)** _____ **Community** X **Septic Individual**

**School District:** CH - Carr School **Fire District:** New Hope Fire

**General Land Uses in Area:** Residential & Vacant Lands

**Critical Areas:** Stream & Buffer on Site **stream/drainageways** _____ **flood prone areas**

Jordan Lake Unprotected **watershed (specify)** _____ **historic sites**

**other (explain)** _____

**Is the property to be subdivided currently under "farm use value taxation"? Yes** ____ **No** X **. If "yes," please contact the Orange County Tax Office. Subdivision of the property may require payment of deferred taxes under "farm use value taxation."**

**B** **All plats must be submitted on sheet no smaller than one inch equals two-hundred feet (1"=200') and no larger than one inch equals twenty feet (1"=20') and must contain the following information:**

| | | |
|---|---|---|
| CPK | ____ | subdivision name |
| CPK | ____ | name & address of owner(s) |
| CPK | ____ | name & address of subdivider (if other than owner) |
| CPK | ____ | name of surveyor, engineer, landscape architect or architect, address, registration # & seal |
| CPK | ____ | (title) Preliminary Plan |
| CPK | ____ | scale, north arrow |
| CPK | ____ | date of plan preparation and revisions |
| N/A | ____ | township, tax map-block-lot references |
| CPK | ____ | Parent Parcel Identification # |
| | | deed book and page # of property to be subdivided |
| CPK | ____ | boundary described with bearings and distances |
| CPK | ____ | zoning of tract and adjacent properties |
| CPK | ____ | building setback lines by notation or typical lot layout |
| CPK | ____ | location and width of existing and proposed easements (drainage, utilities, roads, etc.) |
| CPK | ____ | Existing, proposed and adjoining rights-of-way including dimensions and street names and State Road numbers. Linear feet of road centerlines and approximate acreage of new street rights-of-way |
| CPK | ____ | existing and proposed utilities, including type, sizes, hydrants, valves, manholes |
| CPK | ____ | existing and proposed curbs, gutters and culverts, including sizes and grades |

| | | |
|---|---|---|
| | | total acreage of the tract and acreage of lots, including and excluding area within rights-of-way |
| CPK | | control corner |
| CPK | | proposed lot lines with dimensions |
| CPK | | lot & block numbers |
| N/A | | phasing line(s) |
| CPK | | topography at ten (10) foot intervals |
| CPK | | water bodies, streams, floodways and floodplains |
| CPK | | stream buffers |
| CPK | | location and size of parcels dedicated for public use, recreational use or reserved in common, with purpose noted |
| CPK | | impervious surface data (if located in water supply watershed) |
| CPK | | vicinity map showing general location of subdivision with streets and roads identified by State Road number and name |
| CPK | | landscaping and buffer requirements |
| N/A | | township, corporate and extraterritorial planning jurisdiction lines which cross the property |

| | | |
|---|---|---|
| | | location and width of alleys, sidewalks, bike lanes, transit systems, and bus stops |
| CPK | | typical street cross-sections and intersection details including design and width of travelway and shoulders |
| CPK | | horizontal alignment, centerline radius, and general curve data on all proposed streets |
| CPK | | permanent features such as buildings, cemeteries, historic landmarks |
| CPK | | adjoining lot layout names of adjoining property owners. If subdivided, subdivision plat name, plat book & page number, and perimeter lot numbers. |
| CPK | | location and size of lots of restricted development potential and notation on plat regarding same |
| CPK | | stormwater detention and/or retention sites and undisturbed areas for infiltration purposes (if located in water supply watershed) |
| CPK | | identified natural areas and wildlife corridors |

**C OTHER SUBMITTAL REQUIREMENTS:**

1. Twenty-five (25) copies of the Preliminary Plat.
2. One full size copy of an Orange County Tax Map (with tax parcels involved clearly marked).
3. Where municipal or OWASA sewer is not available, a copy of the Preliminary Plat indicating Health Department approval/denial for each lot show thereon.
4. Where a private road is proposed, a written statement by the applicant or his/her authorized representative which sets for the justification for a private road (see Section IV-B-3-d-1 of the Orange County Subdivision Regulations).
5. Auxiliary documents, in draft form, prepared in accordance with Section VI of this Ordinance which assure completion and/or maintenance of improvements required by this Ordinance. Such documents may include, but not be limited to, a private road maintenance agreement and articles of incorporation and restrictive covenants pertaining to a homeowners association. These documents may be required as necessary as evidence that the ordinance requirements are being met.
6. Fee - $500 plus $5.00 per lot (one fee for Preliminary and Final Plat).
7. If the subdivision contains 10 lots or more, the following information shall be submitted with the application:
   a. Number of years to buildout.
   b. Number of houses to be built during each year until buildout.
   c. Average price of houses including lots for each year to buildout.

I certify that to the best of my knowledge the information contained above, and in the supporting documents, is a factual representation of the proposed development. I acknowledge that by signing this application, the Orange County Planning and Inspections Department is authorized, pursuant to N.C. Gen. Stat. Section 153a-360, to make as many inspections of the subject property as may be necessary to verify that the proposed work outlined herein is consistent with the provisions of all applicable State and local laws, ordinances and regulations. By signing this application, I acknowledge and agree that inspectors, zoning officers, erosion control officers, and other staff of the Orange County Planning & Inspections Department have a right, upon presentation of proper credentials, to enter the subject property at any reasonable hour for the purposes of inspection or other enforcement action.

| | | | |
|---|---|---|---|
| APPLICANT'S SIGNATURE | DATE 6/25/15 | OWNER'S SIGNATURE | DATE |

**FEES:** Amount _____ Date Paid _____ Receipt # _____

**Site Assessment for PIN:9891-80-0703 and 9891-60-4884**

**Site Data**
**Zoning: RB - Rural Buffer**
**Acreage: 48.0 acres**
**Overlay Districts: Jordan Lake Unprotected**
**Plat/Legal Description: PIN: 9891-80-0703 DB 5892 / PG 471 Plat Book 58 / PG 21 and PIN: 9891-60-4884 DB 2027 / PG 561 Plat Book 110 / PG 157**
**Recorded Declarations/Covenants: Not Found**

**Zoning Requirements**
**Min. Lot Size: 87,120 sq. ft.**
**Min. lot width: 130'**
**Maximum height: 25'**
**Building Setbacks:**
**-Front (and Corner lots) = 40' from public rights-of-way**
**-Side Setbacks = 20' from side lot lines**
**-Rear Yard Setback = 20' from rear lot lines**

**Note: Lot size, building setbacks and stream buffers may increase based on Private Road Justification (UDO 7.8.5).**

**Environmental Features:**
**-Stream buffers located on lots. Stream buffer is 80 ft (displayed) for northern stream, and 50 ft (SWID) for eastern stream. Waterbody buffer not required for pond, please see SWID for details.**

**Impervious Surface Limits: NA**

**Land Disturbance Thresholds**
**1) Environmental Control Permit required if disturbing more than 20,000 sq.ft.; and**
**2) Stormwater Management Permit required if disturbing more than 21,780 sq. ft. for residential structures.**

**Note: Surface Water Identification (SWID) was performed by the Orange County Engineering Erosion Control Division and issued its findings on February 3, 2015**

**Date Site Assessment Completed: 3/20/2015 by SMS**

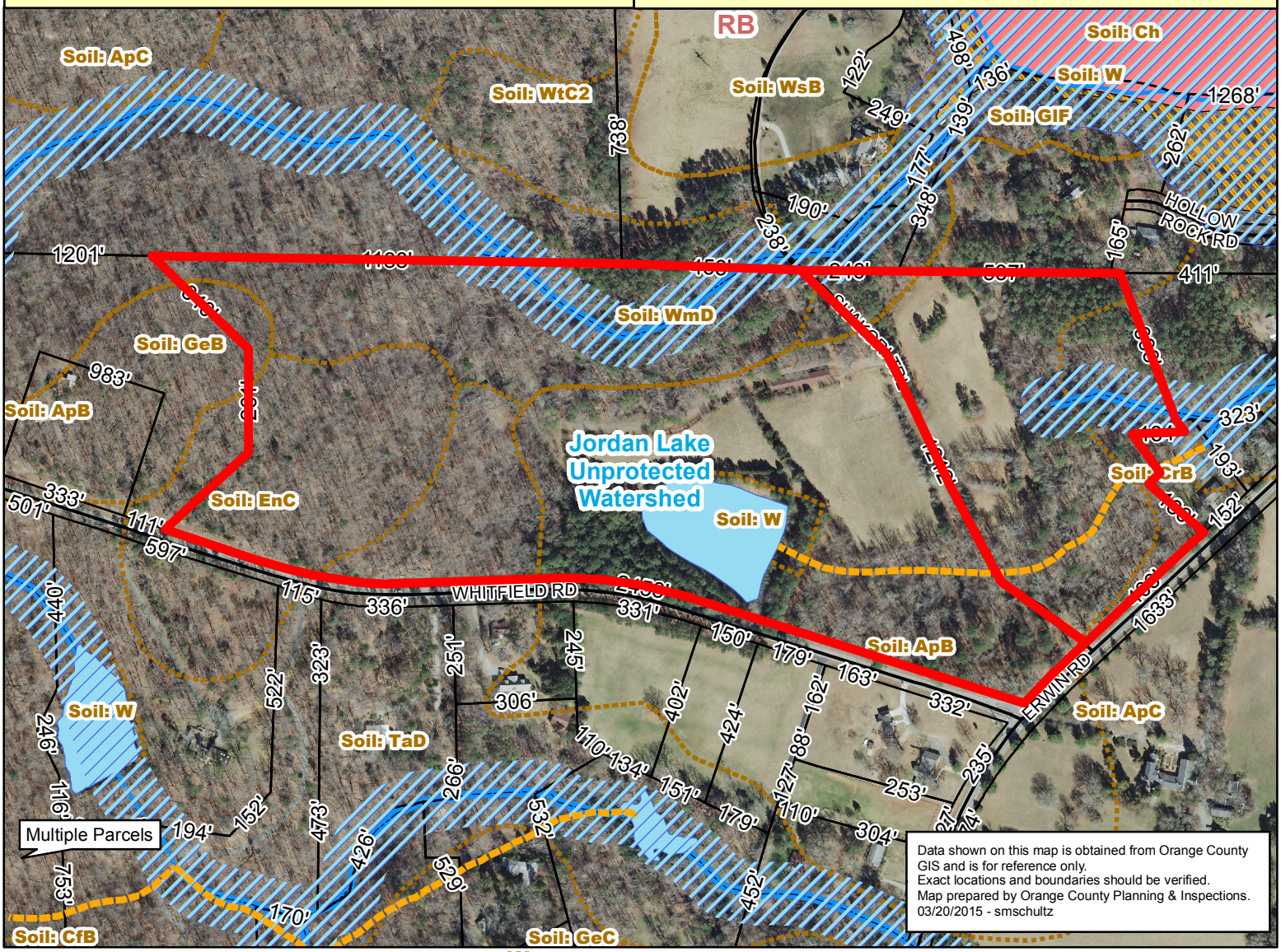


Streams (Deleted)
USGS Stream
Soils Survey Stream
OC Updated Stream
Stream Buffer 80ft
Floodplain Buffer 80ft
Parcels
Zoning
Water Body
Watershed
Soils
100 YR Floodplain (Effective 02/02/07)
Floodway (Effective 02/02/07)
500 Year Floodplains (Effective 02/02/07)

N

1 inch = 400 feet

0 100 200 Feet

Attachment 3

204 West Clay Street
Mebane, NC 27302
Phone: (919) 563-9041
Fax: (919) 304-3234

# EarthCentric Engineering, Inc.

September 9, 2015

Orange County Planning & Inspections Dept.
Patrick R. Mallett, Planner II
131 W. Margaret Lane
Suite 201
P. 0. Box 8181
Hillsborough, NC 27278

Reference: ECE#14-044 – Henderson Woods response to Preliminary Plan Review Comments

Dear Reviewers:

Attached are the requested revisions to the above referenced project. All comments have been addressed as indicated below.

**I. Cover Sheet:**

1. Provide a site total below Parcel 1 and 2 in the Project Data Table;
   **Site totals provided.**

2. Your density is correct. However, the density should be noted as unit per acres (i.e. 1 unit per 2.52 acres);
   **Density notation changed as requested.**

3. Itemize the linear feet in all access easements; and
   **Access easement lengths are now itemized.**

4. Provide a note stating that any proposed road names will be submitted to Orange County Land Records for review and approval prior to recordation to ensure the names meet the County's Addressing Ordinances and policies. Please be advised that Shakori Trail is the name of the current Private Road. At this time, it is uncertain whether the name would remain when converted to a public road.
   **Notation added.**

**II. Existing Conditions (Sheet C-2):**

1. Provide topographic contours for the entire site;

**GIS contours are now provided outside of the approximately 100' wide surveyed corridor along the proposed roadway. The GIS elevations do not precisely match the as-surveyed elevations but they are within an acceptable tolerance and the slope trends are generally consistent.**

2. Illustrate potential wetlands and note regarding USAEC 404 Permitting requirements.

   **The northern wetlands and the associated buffer are now shown as they were indicated by S&EC using GIS location data. The southern wetlands is currently under re-review by S&EC and we anticipate reclassification shortly. Consequently, we currently show no buffer around the indicated area. If, after review, any work affecting any wetlands is indicated, the proper 404 permits will be acquired prior to construction.**

3. Illustrate "Edges of pavement" along Erwin and Whitfield roads;

   **Edges of pavement have now been added to Erwin and Whitfield roads past the boundaries of the Henderson Woods property. The EOP is based on GIS data and surveyed rights-of-way for the roads.**

4. Illustrate existing trees stands/tree lines with sample vegetation and specimen trees with types heights, Caliper/DBH (e.g. 60% evergreen trees primarily loblolly pines range in height from 30-60' in height and 10"-32" caliper inches in size as measured from Diameter Breast Height; and 40% understory and canopy hardwoods….");

   **Existing tree lines have been added to the drawings based upon Orange County GIS orthophotos of the site. The site consists of a mix of both mature evergreen and deciduous trees. However, as a formal tree survey is not required by the UDO, tree caliper, height and species mix have not been indicated on the plans as they have not been determined.**

5. Illustrate septic systems and additional wells on the property with notes regarding removal;

   **A note regarding proper abandonment of the existing well and septic field has been added.**

6. Note sources for data; and

   **A note listing the sources for the various data presented on the plans has been added to the lower left corner of the page.**

7. Please show the adjacent uses around the proposed subdivision (e.g. developed single-family residential).

   **Standard use codes have been added to the basic data blocks for each of the adjacent properties (SFR – Single Family Residential, CMSC – Commercial Miscellaneous, etc.)**

III. **Site Plan (Sheet C-3):**

1. Illustrate potential well and septic areas or provide additional sheet with this information;

   **A new sheet, C6.0 (Utility Plan) has been added to the submittal set. It shows soils, potential building locations and the septic fields as identified and located by the Health Department on GIS data (see attached report) and some potential well locations. The purpose of this information at this stage of design is only to show the basic viability of the lots. Currently S&EC is evaluating and flagging the septic locations for R.S. Jones & Associates to survey. The applicant understands that prior to final approval all lots must have adequate well locations and septic fields identified that comply with all Orange County requirements for size, flow, setbacks, etc.**

2. Categorize and quantify each Primary and Secondary Area;

   **Where the Health Department indicated primary and secondary areas in their report, the septic fields shown on sheet C6.0 have been split. The Health Department did not do this for most of the lots (see attached report).**

3. Include a Site Summary (you can repeat data from cover page);

   **The site summary data from the cover sheet has been repeated here on sheet C3.0**

4. Include and label easements for sidewalks outside of rights-of-way;

   **A variable width easement (from 15' to 25' wide) has been added to the plans outside of the street right-of-way. The width varies to accommodate the meandering nature of the applicant's preferred sidewalk layout.**

5. Planning staff recommends ending sidewalks before cui-de-sacs to cut-down on extraneous concrete and impervious surface;

   **The applicant prefers to continue the sidewalk around the cul-de-sacs to provide a continuous walking path for the residents.**

6. Illustrate the end of the Shakori Trail right-of-way and beginning of access easement to serve norther lots;
   **Any access easement overlap with the new (public) Shakori Trail has been removed. The access easement now begins at the Erwin Road right-of-way ends at the cul-de-sac bulb. Although unpaved past the intersection with "Road B" the public right-of-way continues up to the northern boundary of the site.**

8. Consider tapering EOPs/curb to transition to the above private drive;
   **The pavement now shown tapering over a length of 50' from the roadway width down to the 12' width of the existing gravel private drive.**

9. Indicate surfacing for access easements (paved//gravel?);
   **The pavement in the area of the former access easement remains gravel past the "T" turnaround at "Road B".**

10. It was Planning staff's understanding that a gate would be installed on Shakori Trails for access and Emergency Services access, but there is no gate depicted on the site plan. Please add the gate along with mention of a means of access for emergency services;
    **A gate is now shown towards the Erwin Road end of the access easement. It is located 60' past the Erwin Road right-of-way line.**

11. Detail more definitively the storm drainage easements;
    **The area for the storm drain easements is now shaded in an effort to make them stand out more. They are still somewhat obscured on the 100 scale site plan but they do appear clearly on all of the 40 scale plan and profile sheets. I think this is the best we can do.**

12. Show which sidewalks are ADA accessible and maximum grades; and
    **The plan and profile sheets now indicate (at the bottom of the profile) the areas where the sidewalk meets ADA requirements. Slopes are shown at the road centerline and are the same at the sidewalk except where it is indicated that the sidewalk slope meets ADA requirements (5% or less) while the centerline slope is greater.**

13. Define amenities planned around pond area (a gazebo and community garden were envisioned in the concept plan).
    **The gazebo, garden and play area amenity near the mail kiosk has been indicated on sheet C8.0, the Landscape and Lighting plan. It is more**

**visible here than on the site plan due to text conflicts and the 100 scale size.**

**IV. Grading and Storm Drainage (Sheet C-4):**

1. Delineate storm drainage easements;
   **As noted above, the storm drain easements are now shaded so as to stand out more, but they are shown far more clearly on the plan/profile sheets.**

2. Show limits of disturbance(s), and notes if necessary, if you intended to select grade for the single-family lots;
   **Limits of disturbance are now included on the new C5.0 Erosion Control sheet.**

3. Illustrate silt and tree protection fencing and detail cut sheets for both;
   **The standard combination silt fence/tree protection fence is now indicated on the EC plan, sheet C5.0. It sits generally just outside the sidewalk easement.**

4. Illustrate temp and permanent erosion control and stormwater devices and measures;
   **EC measures are now shown on sheet C5.0, and permanent measures such as riprap aprons are on sheet C4.0.**

5. Add standard Erosion Control, stormwater, land disturbance and Solid Waste Management notes (e.g. "No open burning or dumping...). Also, add note acknowledging that Erosion Control and Stormwater Plans and permits will be required prior to land disturbing activity.
   **Solid Waste requested that their notes appear on the cover sheet. Item #2 in the standard grading and storm drainage notes (sheets C1.0 and C4.0) covers the need for permits before land disturbing can commence.**

**V. General Recommendations and request for additional provisions**

1. Consider adding a phasing plan as part of the approval. Otherwise, all of the project's infrastructure (e.g. roads, sidewalks, BMPs) will need to be built or bonded prior to recordation. A phasing plan may allow you to develop the infrastructure proportionally. In other words, without a Phasing

Plan approved by the Orange County Board of Commissioners, you are committing to building all the infrastructure up front;
**A phase line now appears on sheet C3.0, with Phase 1 being the entrance road and all lots west of the first intersection, and Phase 2 being the remainder of the proposed lots.**

2. Provide an Landscape and Lighting Plans to demonstrate compliance with UDO Landscape requirements (e.g. street trees and between lot plantings) and Lighting requirements;
**A landscape and lighting plan, sheet C8.0 has been added to the submittal set. The lighting portion consists only of a note stating that per the UDO lighting shall be designed and provided by Duke Energy and that they will submit the proper plans prior to construction of any light fixtures.**
3. Provide details and dimensions for the mail kiosk and bump out; and Provide at note regarding signage for subdivision (e.g. "Signage for the development shall comply with UDO Section 6.12: Signs").
**The draft NCDOT detail for a mail kiosk bump out on a public street is now included on sheet D4.0. That is all that is available at this time. Prior to construction, we will coordinate with NCDOT on the bump-out design if they have not yet released a final detail.**

4. Please reference comments in the attached email, dated July 23, 2015, by Jeff Scouten of Orange County Solid Waste Management.
**See comments below.**

**Orange County Solid Waste Management**

1. Plan Sheet C1.0 (Cover Sheet) - Add the following standard OCSW notes: [construction waste notes removed from comment for brevity]

   **The indicated notes have been added to the cover sheet.**

2. Plan Sheet C3.0 (Site Plan) - The minimum radius for each of the 2 proposed cul-de-sacs needs to be 43' 6" (effective 44') to the face of curb in order for the County's recycling trucks to get around them without having to make backing movements and/or 3 point turns. The radius as shown on the plan appears to be 35' to the face of curb.

   **Per discussions with staff (and based on previously approved designs used in Orange County), four 20' wide public access shared drives (two at each cul-de-sac) have been added to give Solid Waste's trucks sufficient space to perform a 3-point turn using those drives plus the standard NCDOT 35' radius cul-de-**

**sac. See sheet C3.0 and the plan/profile sheets for additional detail. The shared drives shall have the same pavement cross section as the NCDOT roadway in order to properly support the trucks' weight.**

Any department not listed above did not provide comments or issued an approval. I believe you will find these revisions adequately address your concerns and appreciate your cooperation on these reviews. Should you have any questions or concerns regarding the attached information, please contact me at (919) 563-9041.

Sincerely,

Charles P. Koch, PE
EarthCentric Engineering, Inc.

ORANGE COUNTY
HEALTH DEPARTMENT
Improving health. Inspiring change.

**Henderson Woods S/D:**

| Lot # | Layout Needed | No Well Site or well to be moved | House site to be moved, new site plan needed | |
|---|---|---|---|---|
| 1 | yes | | | |
| 2 | yes | yes | yes | |
| 3 | yes | yes | yes | |
| 4 | yes | yes | yes | |
| 5 | yes | | | |
| 6 | yes | yes | | |
| 7 | yes | | yes | |
| 8 | yes | yes | yes | |
| 9 | yes | yes | yes | |
| 10 | yes | yes | yes | |
| 11 | yes | yes | yes | |
| 12 | yes | yes | yes | |
| 13 | yes | yes | yes | |
| 14 | yes | yes | yes | |
| 15 | yes | yes | yes | |
| 16 | yes | yes | yes | |
| 17 | yes | yes | yes | |
| 18 | yes | yes | | |
| 19 | yes | yes | | |

***Please note Orange County required setbacks, see attached:**

*KEEP THIS PAGE*

**PLEASE READ THIS BEFORE SUBMITTING THE APPLICATION**
**WHILE YOU ARE WAITING FOR YOUR APPOINTMENT:**

**In the interest of processing your permit application as smoothly and quickly as possible, we ask that you:**

- ❑ Make sure that you have submitted an accurate site plan (preferably to scale) that shows ALL proposed improvements to your lot. This includes:
  - ❑ Existing and proposed property lines with dimensions
  - ❑ Location of existing and proposed structures showing setbacks, wells, driveways, excavations, etc.
  - ❑ Location of surface waters
  - ❑ Your preferred site for the septic system and well.
- ❑ Please stake out any structures, additions, or future improvements on the ground. If you need wire flags for this, we have some available for you.
- ❑ Make sure that property lines and property corners are clearly marked and that the site is accessible for a full evaluation. If we are unable to verify property line locations, it will be necessary for the property to be surveyed before a determination can be made.
- ❑ When vegetation is too thick to permit movement through the site or observation of the topography, the area will need to be "bush-hogged" or thinned out. Be careful not to grade or excavate potential areas, as it is possible to damage sites beyond use. After the site is permitted, do not allow any disturbance of the area designated for the drainfield.
- ❑ You will need to provide backhoe pits in the following cases:
  - ❑ Evaluation of tracts for proposed subdivisions,
  - ❑ When the proposed waste flow exceeds 600 Gallons per day (>5 bedrooms),or
  - ❑ Sites where rock is prevalent
- ❑ Additional fees will be required if the resulting waste flow is >600 gallons per day, or if additional permits are necessary

NOTICE - It is important that you fill in the application completely and accurately and submit the accompanying site plan and floor plan. Incomplete applications can not be processed and will result in lengthy delays. If you change your plans after the permit is issued, a new application and fees will be required, so please be sure the information given is correct.

The PIN is the number that we use to track and file our applications when there is no address assigned to the property. When inquiring about your application, please have the PIN (or the property address) handy. It is usually found in the upper right-hand corner of our forms.

## SETBACKS FOR SEPTIC SYSTEMS

| | |
|---|---|
| WELL | 100 ft * |
| BUILDING FOUNDATION, FOOTING | 15 ft |
| PROPERTY LINE | 10 ft |
| WATER LINE | 10 ft |
| SWIMMING POOL | 25 ft |
| STRUCTURE w/NO FOUNDATION (ex. Decks, carports, pole sheds, etc.) | 5ft from the drip line |
| WS-I STREAM/ SA WATERS / CLASS I RESERVOIR | 100 ft |
| POND, STREAM OR SURFACE WATER | 50 ft |
| STORMWATER DETENTION POND | 50 ft |
| EMBANKMENT, EXCAVATION | 15 ft |
| INTERCEPTOR DRAIN, FOUNDATION DRAIN, STORMWATER DIVERSION | 10 ft upslope<br>15 ft side slope<br>25 ft down slope |
| OTHER NITRIFICATION FIELDS | 20 ft |

- Setbacks for large systems may need to be increased
- Systems must be located on property owned and controlled by the system owner. They may not be located in Resource Conservation Easements, Stream Buffers, Utility Easements, Rights of Way, etc.

## SETBACKS FOR WELLS:

| | |
|---|---|
| SEPTIC SYSTEM | 100 ft * |
| SEWER LINES | 50 ft * |
| PROPERTY LINE | 40 ft * |
| BUILDING FOUNDATIONS | 50 ft * |
| SWIMMING POOL OR SUPPLY STORAGE AREA | 50 ft |
| STORAGE BUILDINGS W/ POTENTIAL CONTAMINANTS | 50 ft |
| OTHER POTENTIAL SOURCES OF CONTAMINATION | 100 ft |

- Setbacks for Public Water Supplies may be increased.
- The well must be located in an area not subject to flooding.

* If it is not possible to achieve these distances, a reduced setback may be granted provided certain conditions can be met.

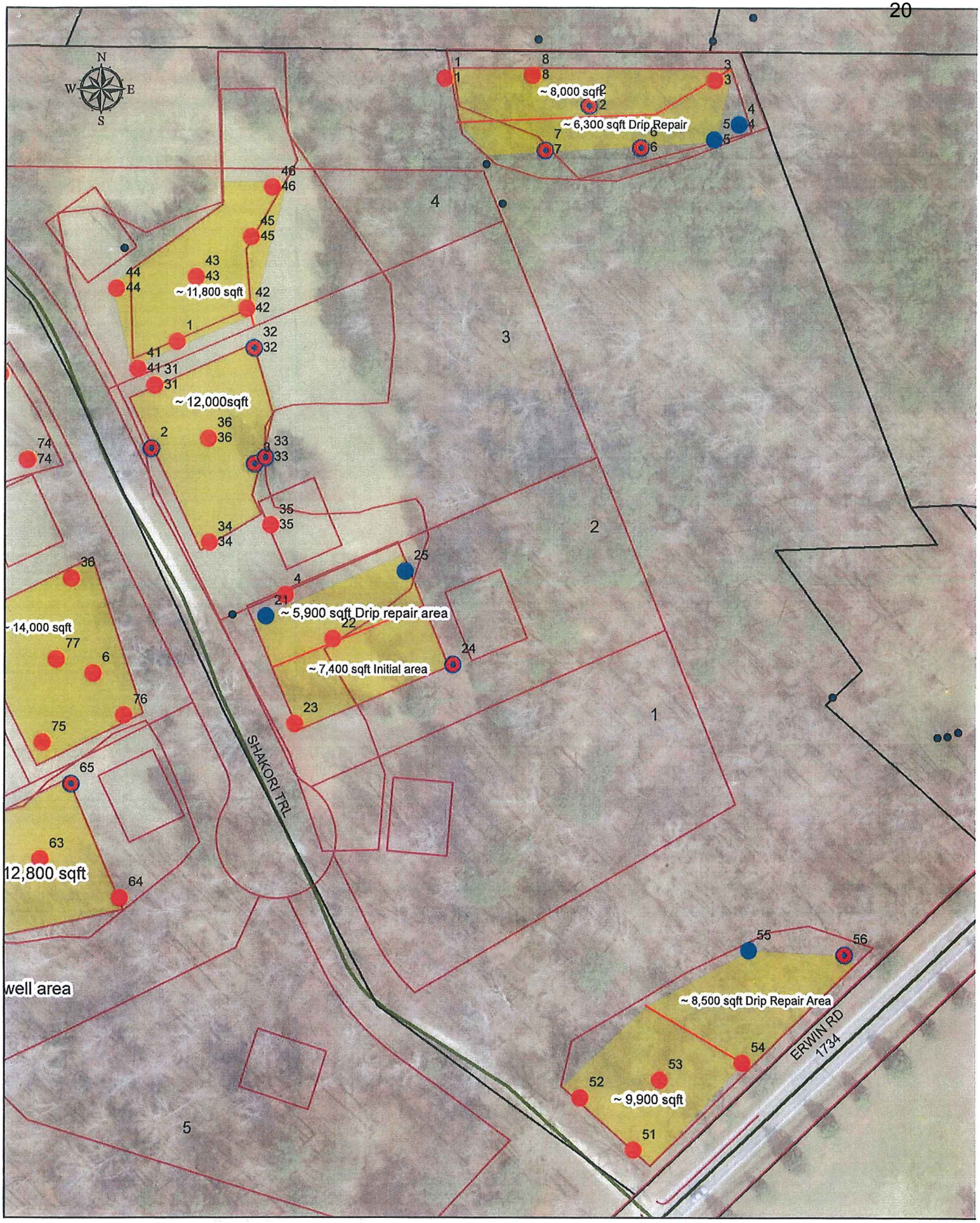


1 inch = 100 feet

# Orange County Environmental Health

This map contains parcels prepared for the inventory of real property within Orange County, and is compiled from

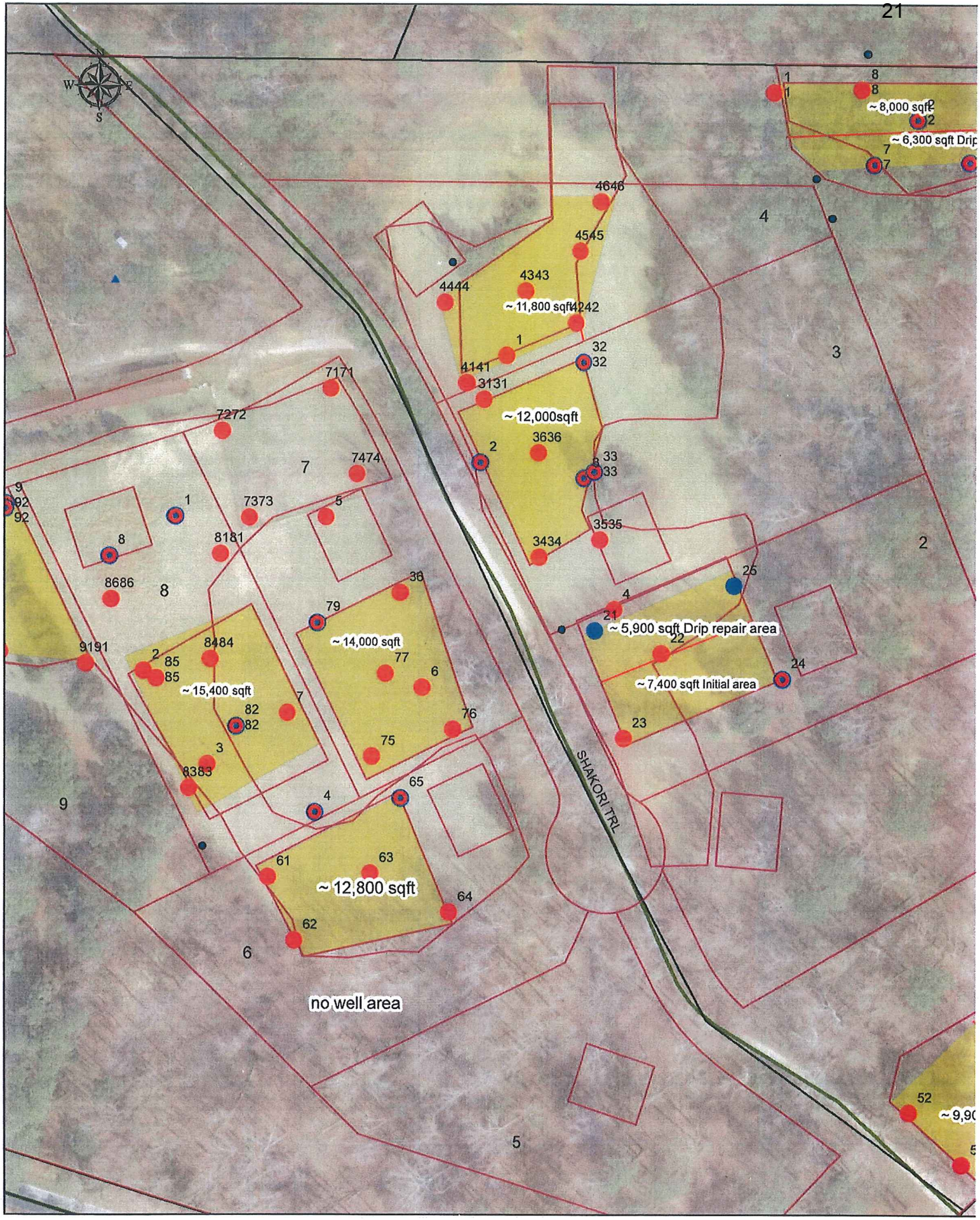


1 inch = 100 feet

# Orange County Environmental Health

This map contains parcels prepared for the inventory of real property within Orange County, and is compiled from

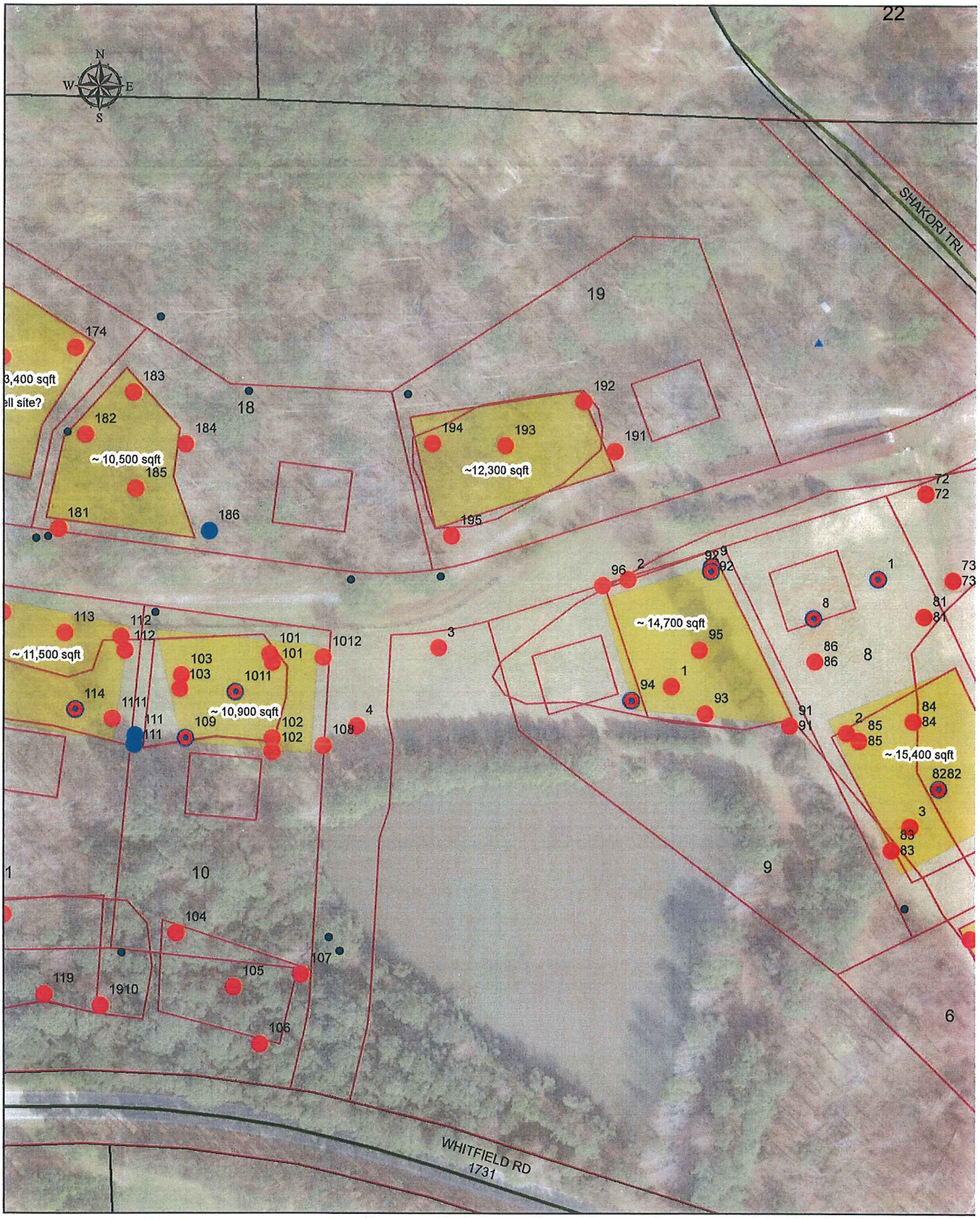


1 inch = 100 feet

# Orange County Environmental Health

This map contains parcels prepared for the inventory of real property within Orange County, and is compiled from

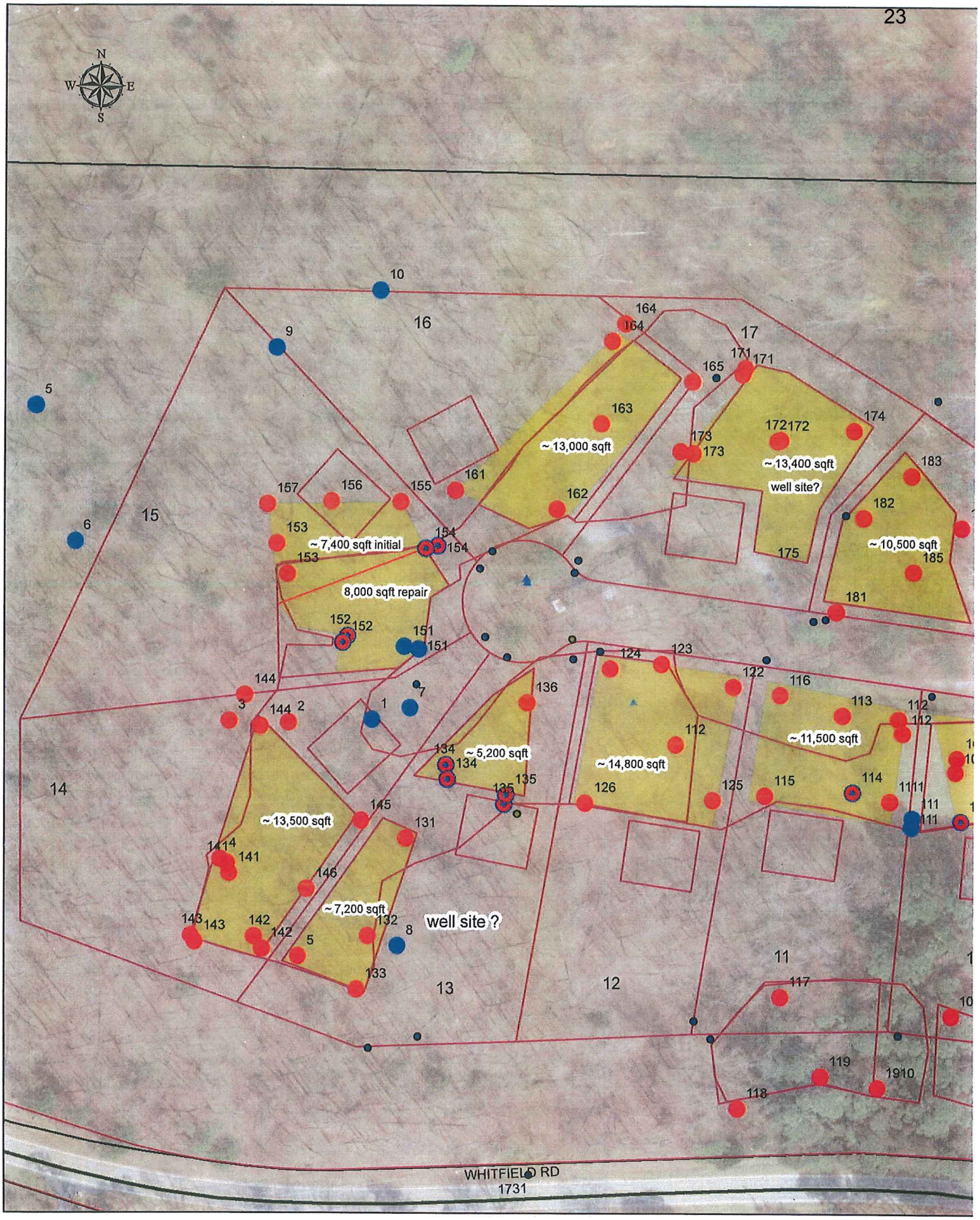


1 inch = 100 feet

# Orange County Environmental Health

This map contains parcels prepared for the inventory of real property within Orange County, and is compiled from

## Patrick R. Mallett

**From:** Jason Shepherd
**Sent:** Monday, September 21, 2015 9:52 AM
**To:** Patrick R. Mallett
**Subject:** RE: Henderson Woods

I don't have any issues with the preliminary subdivision

---

**From:** Patrick R. Mallett
**Sent:** Monday, September 21, 2015 9:28 AM
**To:** Jason Shepherd; Jeff Scouten; Steve J Kaltenbach
**Subject:** Henderson Woods

Can you guys shoot me a quick e-mail stating the you have no significant issues with Henderson Woods Preliminary Subdivision? I need to demonstrate that we have closed the loop.

Very Respectfully,

Patrick R. Mallett, Planner II
Orange County Planning & Inspections Department

Phone: (919) 245-2577
Fax: (919) 644-3022
E-mail: pmallett@orangecountync.gov
Orange County Planning Website: http://www.orangecountync.gov

Address:
131 W. Margaret Lane, Suite 201
P.O. Box 8181
Hillsborough, NC 27278

Pursuant to North Carolina General Statute 132, correspondence sent and received from this account is a public record and may be disclosed to third parties.

## Patrick R. Mallett

**From:** Steve J Kaltenbach
**Sent:** Monday, September 21, 2015 10:37 AM
**To:** Patrick R. Mallett
**Cc:** Michael Harvey
**Subject:** Henderson Woods

Patrick,

With my preliminary review for Erosion Control and Stormwater there are no issues of concern that will preclude development of the Henderson Woods project.

Steve

ORANGE COUNTY

Department *of* Environment,
Agriculture, Parks & Recreation

**MEMORANDUM**

To: Patrick R. Mallett, *Planner II*
Orange County Planning & Inspections Department

From: Rich Shaw, *DEAPR Land Conservation Manager*
Peter Sandbeck, *DEAPR Cultural Resources Coordinator*

Date: September 18, 2015

Re: The Barn of Chapel Hill - Class B Special Use Permit Application

---

Thank you for the opportunity to review the proposal for a retreat center on a 22-acre parcel off Morrow Mill Road in Bingham Township. Our comments are based on an examination of the application for a Class B special use permit that you provided, along with the application for environmental assessment prepared by the applicant and a set of plans for the development.

The applicant wishes to develop a retreat center, "The Barn of Chapel Hill," for hosting wedding celebrations, corporate retreats, and other similar events within a 4,200-square-foot, 19th century barn that the owners intend to relocate from New York to the subject property. The development would include 150 parking spaces, outdoor parking lot lighting, and landscaping.

* * * * * * * *

DEAPR staff completed the following assessment of the natural and cultural resources known to exist on or adjacent to The Barn of Chapel Hill property (PIN 9729-50-7168).

*Natural Resources*: There is no significant natural heritage area (SNHA) known to exist on or adjacent to the subject property. Moreover, the plan appears consistent with the County's desire to minimize adverse environmental impacts with respect to the protection of floodplains, wetlands, natural areas and wildlife habitat. DEAPR's database showed there are no significant natural resource areas (e.g., natural heritage sites, proposed wildlife corridors, prime forest) located on the property.

*Cultural Resources*: There are no previously identified historic properties or resources located on the subject parcel. A nearby parcel includes the Pickard Log house (OC 1113); however that site will not be adversely affected by this proposed barn project. As with any development, care should be taken to locate, identify and protect any potential human burial sites or cemeteries. The current Cemetery Census does not show any identified burials on this parcel.

If you have questions please contact Rich at 919-245-2514 or Peter at 919-245-2517.

## Patrick R. Mallett

**From:** Jeff Scouten
**Sent:** Thursday, July 23, 2015 1:41 PM
**To:** Patrick R. Mallett
**Subject:** Henderson Woods Major Subdivision Plan Review Comments Dated 7/23/15
**Attachments:** Henderson Woods Plan Review Comments Dated 7-23-15.pdf

**Follow Up Flag:** Follow up
**Flag Status:** Flagged

Pat:
I have completed my review of the subject plans and my comments are on the attached memo document.
Thanks for the opportunity to review and comment on this plan and please let me know if you have any questions or wish to discuss this matter further.

Jeff Scouten
Environmental Enforcement Supervisor
Orange County Solid Waste Management
P.O. Box 17177
Chapel Hill, NC 27516-7177
919-968-2788 x 107 (Office)
919-932-2900 (Facsimile)
jscouten@orangecountync.gov
http://orangecountync.gov/recycling

ORANGE COUNTY
NORTH CAROLINA

# MEMORANDUM

**TO:** PATRICK MALLETT, PLANNER II, ORANGE COUNTY PLANNING DIVISION

**FROM:** JEFF SCOUTEN, ORANGE COUNTY SOLID WASTE MANAGEMENT

**SUBJECT:** HENDERSON WOODS MAJOR SUBDIVISION PLAN REVIEW COMMENTS – PLANS DATED 7/1/15

**DATE:** JULY 23, 2015

I have completed my review of the subject plans and the following comments must be satisfactorily addressed before I can offer my recommendation for approval:

1. Plan Sheet C1.0 (Cover Sheet) – Add the following standard OCSW notes:

   Construction Waste:

   - All existing structures 500 Square Feet and larger in size shall be assessed prior to demolition to ensure compliance with the County's Regulated Recyclable Materials Ordinance (RRMO) and to assess the potential for de-construction and/or the re-use of salvageable materials.
   - By Orange County Ordinance, clean wood waste, scrap metal, and corrugated cardboard present in construction or demolition waste must be recycled.
   - By Orange County Ordinance, all haulers of mixed construction and demolition waste that includes any regulated recyclable materials shall be licensed by Orange County.
   - Prior to any demolition or construction activity on the site the Applicant shall hold a pre-demolition/pre-construction conference with the Solid Waste staff. This may be the same pre-construction meeting held with other development/enforcement officials.
   - The presence of any asbestos containing materials ('ACM') and/or other hazardous materials in construction and demolition waste shall be handled in accordance with any and all local, state, and federal regulations and guidelines.

2. Plan Sheet C3.0 (Site Plan) – The minimum radius for each of the 2 proposed cul-de-sacs needs to be 43' 6" (effective 44') to the face of curb in order for the County's recycling trucks to get around them without having to make backing movements and/or 3 point turns. The radius as shown on the plan appears to be 35' to the face of curb

Thanks for the opportunity to review and comment on this plan and please do not hesitate to contact me with any questions or to discuss this matter further.

**Patrick R. Mallett**

| | |
|---|---|
| **From:** | Jeff Scouten |
| **Sent:** | Tuesday, August 04, 2015 4:37 PM |
| **To:** | Shawn Sidener |
| **Cc:** | Patrick R. Mallett |
| **Subject:** | RE: Henderson Woods |
| **Attachments:** | New Truck Turn Radii Templates July 2015.pdf |
| **Follow Up Flag:** | Follow up |
| **Flag Status:** | Flagged |

Shawn:
We prefer that plans meet the minimum turning radii for our collection trucks before we consider alternatives.
Attached are templates that you can use to try and make it work for the project.
Try to go that route first.
Thanks.

Jeff Scouten
Environmental Enforcement Supervisor
Orange County Solid Waste Management
P.O. Box 17177
Chapel Hill, NC 27516-7177
919-968-2788 x 107 (Office)
919-932-2900 (Facsimile)
jscouten@orangecountync.gov
http://orangecountync.gov/recycling

ORANGE COUNTY
NORTH CAROLINA

---

**From:** Shawn Sidener [mailto:Shawn.Sidener@EarthCentric.com]
**Sent:** Tuesday, August 04, 2015 3:02 PM
**To:** Jeff Scouten
**Subject:** Henderson Woods

Jeff,

We were going over the comments for Henderson Woods with Patrick in Planning. Patrick told us you have some "alternates" that we could look at instead of the increased Cul-de-sac size. I would like to see what options are available. Thank you.

Shawn C. Sidener
Office Manager, CAD Drafter
EarthCentric Engineering Inc.

204 West Clay Street
Mebane, NC 27302-2436

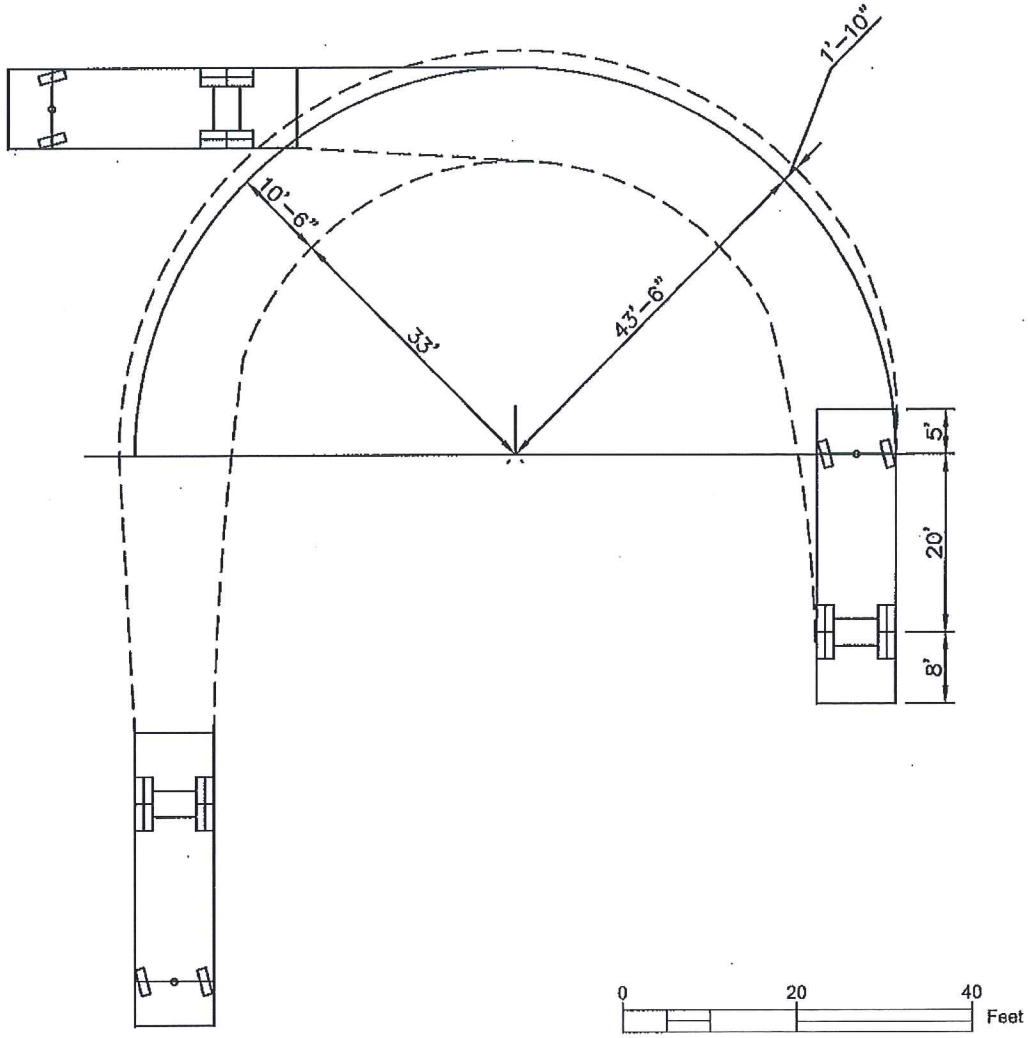


STANDARD SOLID WASTE AND RECYCLING COLLECTION VEHICLE
WB 20, MIN PRACTICAL TURNING RADIUS 33'

PLOTTED: July 20, 2015–4:15pm (gdively) FILENAME: S:\engineer\CADD Drive\trash truck turn template.dwg LAYOUT: 20 SCALE

| | | | |
|---|---|---|---|
| ORANGE COUNTY<br>SOLID WASTE MANAGEMENT<br>1207 EUBANKS ROAD<br>PO BOX 17177<br>CHAPEL HILL, NC 27516 | ORANGE COUNTY, NC<br>SOLID WASTE MANAGEMENT<br><br>TURN RADIUS TEMPLATE | REVISION | FIGURE 1<br>DATE: 7/20/2015 DESIGN:<br>SHEET NUMBER: 1 |

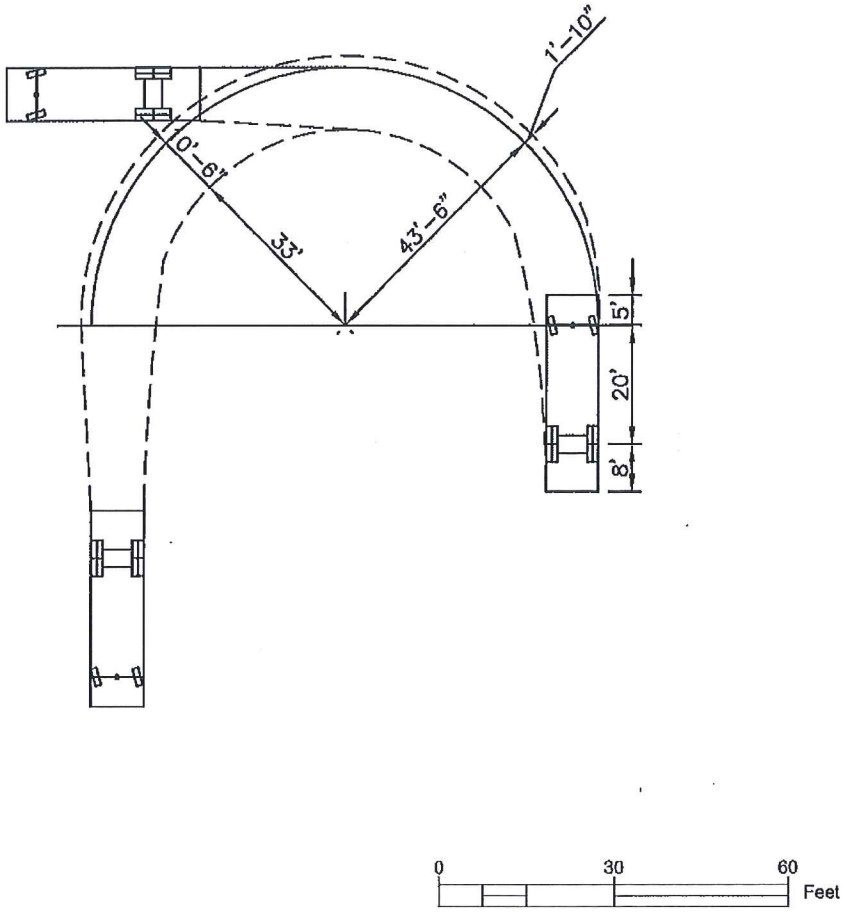


STANDARD SOLID WASTE AND RECYCLING COLLECTION VEHICLE
WB 20, MIN PRACTICAL TURNING RADIUS 33'

PLOTTED: July 20, 2015-4:16pm (gdively) FILENAME: S:\engineer\CADD Drive\trash truck turn template.dwg LAYOUT: 30 SCALE

| | | | |
|---|---|---|---|
| ORANGE COUNTY<br>SOLID WASTE MANAGEMENT<br>1207 EUBANKS ROAD<br>PO BOX 17177<br>CHAPEL HILL, NC 27516 | ORANGE COUNTY, NC<br>SOLID WASTE MANAGEMENT<br><br>TURN RADIUS TEMPLATE | REVISION | FIGURE 2<br>DATE: 7/20/2015<br>DESIGN:<br>SHEET NUMBER: 1 |

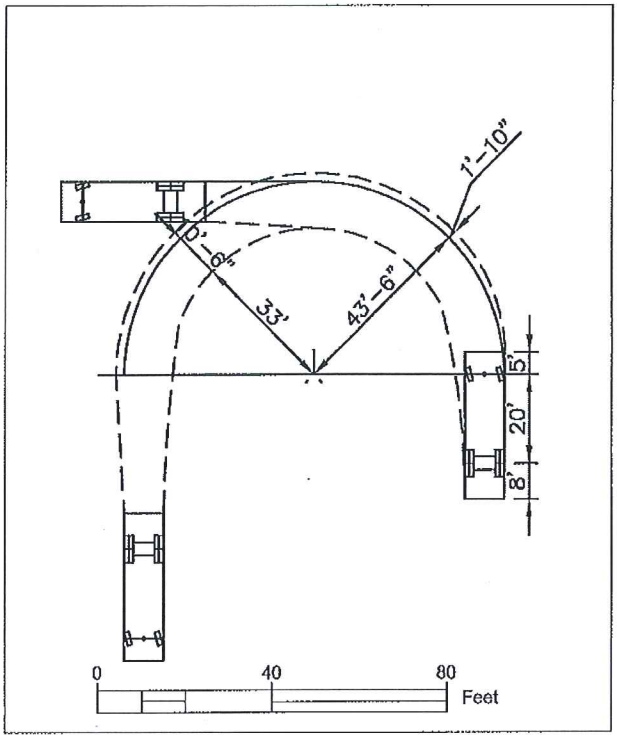


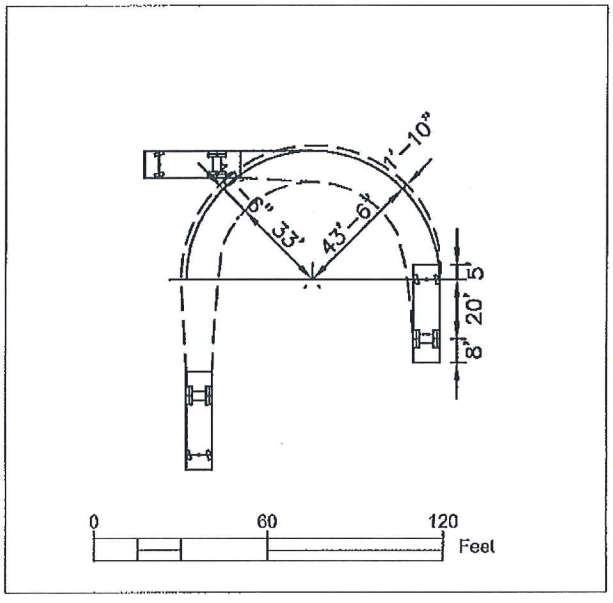


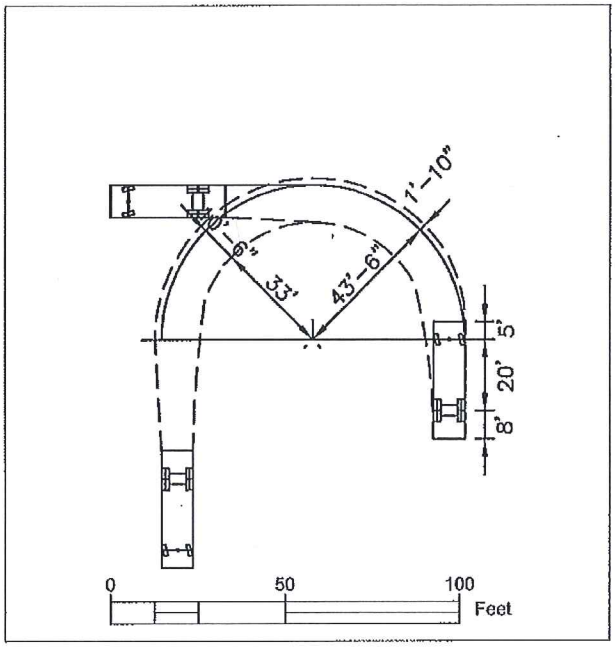


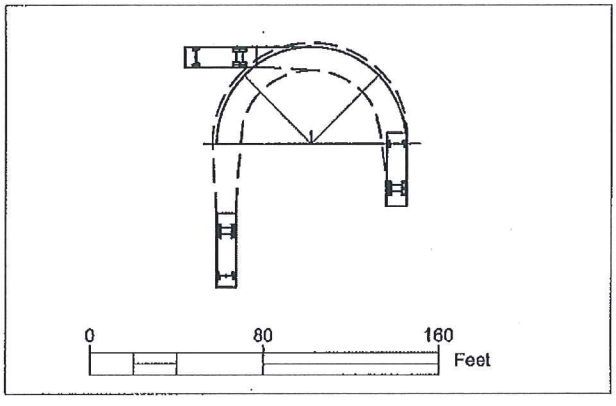


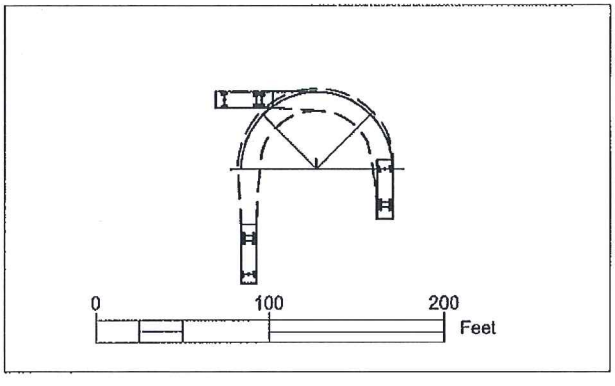


STANDARD SOLID WASTE AND RECYCLING COLLECTION VEHICLE
WB 20, MIN PRACTICAL TURNING RADIUS 33'

PLOTTED: July 20, 2015-4:16pm (gdlvely) FILENAME: S:\engineer\CADD Drive\trash truck turn template.dwg LAYOUT: REST

| | | | |
|---|---|---|---|
| ORANGE COUNTY<br>SOLID WASTE MANAGEMENT<br>1207 EUBANKS ROAD<br>PO BOX 17177<br>CHAPEL HILL, NC 27516 | ORANGE COUNTY, NC<br>SOLID WASTE MANAGEMENT<br><br>TURN RADIUS TEMPLATE | REVISION | FIGURE 3<br>DATE 7/20/2015 DESIGN:<br>SHEET NUMBER: 1 |

**PLANNING & INSPECTIONS DEPARTMENT**
**Craig N. Benedict, AICP, Director**

**Administration**
**(919) 245-2575**
**(919) 644-3002 (FAX)**
**www.orangecountync.gov**

ORANGE COUNTY
NORTH CAROLINA

**131 W. Margaret Lane**
**Suite 201**
**P. O. Box 8181**
**Hillsborough, NC 27278**

# HENDERSON WOODS
# NEIGHBORHOOD INFORMATION MEETING HIGHLIGHTS
# TUESDAY, APRIL 7, 2015
# LOCATION: ORANGE COUNTY PLANNING CONFERENCE RM 4.
# TIME: 5:30-7:30PM
# MEETING ORGANIZER: TOM HEFNER, HEFNER PROPERTIES, LLC

The applicant is seeking Concept Plan approval from Orange County Planning staff regarding a proposed 19 lot Major Subdivision of a 48 acre tract of land at the intersection of Whitfield (S.R. 1731) and Erwin Roads (S.R. 1734).

Per Section 2.15 of the Orange County Unified Development Ordinance (UDO), titled "Major Subdivisions," the required Neighborhood Information Meeting (NIM), was hosted by Orange County Planning staff and presented by the developer on April 7, 2015. Approximately 20 adjacent property owners and area residents attended the meeting.

**Henderson Woods Major Subdivision Overview**
**Applicant:** Dr. Thomas Humphries and Tom Hefner, Hefner Properties, Chapel Hill, NC
**Location:** Intersection of Whitfield Road and Erwin Road
**PINs:** 9891-80-0703; and 9891604884

**Legal Description:** DB 5892 PG 471; PB 58 PG 21; DB2027 PG 561; and PB 110 PG 157
**Zoning:** Rural Buffer (RB)
**Overlay Districts:** Jordan Lake Unprotected Watershed
**School District:** Chapel-Hill Carrboro Schools
**Utilities:** Private individual Well and Septic Systems
**Total Acreage:** 48 acres
**Proposed Lots:** 19 lots
**Density:** One dwelling units per 2.52 acres

**Access:** Vehicular access to the subdivision is proposed via Whitfield Road. The 19 lots would be served via a network of 3 public streets (built to public street standards). Private drives and access easements are also provided to the adjacent property owners along Shakori Trail. This access drive would be restricted to those adjacent owners and Emergency Services.

**Proposal:** Applicant is proposing a 19 lot major subdivision (Henderson Woods) with Primary and Secondary Common Open Space. The request would utilize the Flexible Development Option, which allows for minimum lots sizes of 1 acre with the provision of a minimum of 33% Open Space. The proposal holds approximately 42% of the site in Primary and Secondary Open Space (20.35 acres). All lots are adjacent and have access to Primary and/or Secondary Open Space.

**Meeting Highlights**:

Orange County Planning staff presented the 20 attendees with an overview of: the application; the site; surrounding area; site environmental constraints, the zoning and subdivision requirements and the tentative schedule for the plan's review and approval or denial by the Orange County Board of Commissioners.

Mr. Hefner, presented his site analysis, the Concept Plan, the basis for the design, plan revisions based on meetings with Orange County staff, NCDOT recommendations, site observations, environmental assessments and environmental and developments constraints associated with the property. He then opened up the meeting to comments, ideas and questions from the residents. Dr. Humphries was not present at the meeting.

The questions and concerns from residents centered on the following categories:

1. **Vehicular Access and Traffic.**
   - Residents expressed concerns about the potential for traffic congestion on Erwin and Whitfield (especially during the AM and PM peak hours). Residents with access via Shakori Trails were also concerned with maintaining their current legal access. Residents who live off Turkey Farm Road also raised concerns that they would be negatively affected by traffic

   - Orange County Planning Staff outlined the access, public and private street standards, the merits of locating the proposed access onto Whitfield Road vs. Erwin Road, the connections to Shakori Trails, and the internal circulation of the proposed plan.

   - Mr. Hefner outlined his meetings with NCDOT, the site constraints, legal obligations to provide access to Erwin Road for the two Shakori Trails homes, Emergency Service Access. He also noted the AM and PM traffic patterns that had been observed on Whitfield and Erwin Roads, and that the estimated amount of additional cars (approximately 38 new cars) from the proposed new residencies would not cause a harmful impact to the road network.

2. **Lot Size, Density and Open Space .**
   - Residents expressed concerns about the 1 acre minimum lot size, the number of units, preserving the character of the area, the Rural Buffer, New Hope Creek and Duke Forest.

   - Orange Planning Staff reviewed the UDO requirements, the perimeter setback and buffers, the value of the Flexible Design Option with dedicated common Open Space, the effective density (2.5 dwelling units per acre), and best planning practices for environmentally sensitive design. Staff also noted that the site's zoning and watershed would allow for up to 24 dwelling units.

   - Mr. Hefner reviewed the market analysis, site constraints, the initial concept plans which yielded 22-24 lots, the suitable soils, and steep slopes. He noted the desire to preserve common areas in dedicated open space vs. 19 lots. In response to a resident inquiry, he also noted that that any person with a lot can choose his/her own residential builder.

3. **Setbacks, Buffers and Tree Preservation.**
   - Residents asked questions about setbacks, buffers and areas along the perimeter of the project.

- Orange County Staff reviewed the 100' building setback, roadside buffer requirements, as well as required tree save areas within the Primary Conservation areas.

- Mr. Hefner reviewed his plans to preserve most of the trees within the 100' building setback and to designate most if not all of the 100' perimeter as dedicated open space. He also noted the value of maintaining the open space areas within an HOA vs. 19 lots.

**4. Conventional vs. Flexible Design.**

- Residents asked questions the requirements and provisions of the Flexible Design Option. Specifically.

- Orange County Staff reviewed the provisions and requirements as well as the benefits of the Plan (e.g. HOA ownerships and maintenance of the Open Space and the fact that the entire perimeter of the project is controlled by one entity vs. 19 owners. It is also inherently a more sustainable and environmentally sensitive design. Staff also reviewed the 1 acre min. provisions as allowed in the UDO and other Joint Planning Agreements.

- Mr. Hefner reviewed his conventional option for the site, the benefits from a development and maintenance perspective and his commitment to exceed the minimum requirements.

**5. Trails and Connections to New Hope Creek and/or Duke Forest.**

- Residents asked questions about the possibility of trail connections to Duke Forest and New Hope Creek.

- Orange County Staff notes that trails of this nature would require additional easements and improvements through numerous properties. Trails Access via Whitfield may also cause additional off-street parking and traffic congestion issues. Staff noted that public access is often encouraged but to the extent that it causes harm and/or interference with open space that is intended to be more passive in nature.

- Jena Schrieber, Operations Manager for Duke Forest was in attendance and indicated that they could consider such a request. However, it was unlikely considering Duke Forest's existing access points nearby and the strategy of directing pedestrian access to strategic points of the Forest and New Hope Creek.

- Mr. Hefner reviewed his conventional option for the site, the benefits from a development and maintenance perspective, and his commitment to exceed the minimum open space requirements. He also deferred to Duke Forest to make any further determinations about additional public access points through their property.

**6. Well and Septic**

- Residents asked questions regarding the nature of the suitable soils for the septic systems and water supply for the wells. They also expressed concerns that the development may impact their water quality and quality.

- Orange County Staff reviewed suitable soils indicated on the plan and the fact that the plan calls for individual wells and septic systems.

- Mr. Hefner reviewed his plans for individual well and septic systems contained on each lot. He also explained the hydro-geological composition of the area, the fact that the area's water is served by fractured granite water deposits, and that it is unlikely that the wells associated with this development would draw from the same water source(s).

**7. Environmentally Sensitive Areas.**

- Residents asked questions protecting the stream buffers, wetlands and the pond.

- Orange County Staff reviewed the jurisdictional stream buffer requirements and the fact that a Surface Water Identification (SWID) was performed and determined that the existing pond was and drainage way form the dam was not jurisdictional. They also pointed out that disturbing any jurisdictional wetlands greater than 1 acre on the entire site would be subject to permitting and/or mitigate with the County and U.S. Army Corps of Engineers.

- Mr. Hefner reviewed his plans to preserve the pond, but rework it into a viable amenity and storm water feature. He also indicated that he would have the site evaluated for any jurisdictional wetlands.

**8. Lighting.**

- Residents asked about the design and intensity of the street lighting.

- Orange County Staff cited county's required lighting ordinance, which restricts light spillover, glare and intensity.

- Mr. Hefner indicated that the projects restrictive covenants would likely prohibit free standing lights of that the street lighting fixtures installed along the public streets.

Staff concluded the meeting with a summary of the next steps in the process. The meeting was adjourned at approximately 1:45PM.

**PLANNING & INSPECTIONS DEPARTMENT**
**Craig N. Benedict, AICP, Director**

**Administration**
**(919) 245-2575**
**(919) 644-3002 (FAX)**
**www.orangecountync.gov**

ORANGE COUNTY
NORTH CAROLINA

**131 W. Margaret Lane**
**Suite 201**
**P. O. Box 8181**
**Hillsborough, NC 27278**

# CERTIFICATION OF MAILING

**NEIGHBORHOOD INFORMATION MEETING (NIM) – REVIEW OF CONCEPT PLAN APPLICATION FOR HENDERSON WOODS MAJOR SUBDIVISION ORANGE COUNTY, NORTH CAROLINA**

I, Patrick Mallett, Planner II with Orange County, North Carolina, DO HEREBY CERTIFY that in accordance with the provisions of Section 2.15.2 (D) of the Orange County Unified Development Ordinance (UDO) I have mailed, or have caused to be mailed, a Notice of Neighborhood Information Meeting regarding the processing of a Concept Plan Major Subdivision application submitted Dr. Thomas Humphries and Tom Hefner, Hefner Properties to develop a 19 lot single-family residential subdivision on 48 acres of property further identified utilizing Orange County Parcel Identification Number(s) (PIN) 9891-80-0703 and 9891-60-4884 located at the intersection of Whitfield and Erwin Roads within the Chapel Hill Township of Orange County.

The owners were identified according to the Tax Records and as required by the UDO.

The mailed notice specified the date, time, place and subject of the NIM.

WITNESS my hand, this 20th day of March, 2015.

Patrick Mallett
Planner II

**PLANNING & INSPECTIONS DEPARTMENT**
**Craig N. Benedict, AICP, Director**

**Current Planning**
**(919) 245-2575**
**(919) 644-3002 (FAX)**
**www.orangecountync.gov**

ORANGE COUNTY
NORTH CAROLINA

**131 W. Margaret Lane**
**Suite 201**
**P. O. Box 8181**
**Hillsborough, NC 27278**

March 20, 2015

**NOTICE OF NEIGHBORHOOD INFORMATION MEETING (NIM):**

RE: NOTIFICATION OF A NEIGHBORHOOD INFORMATION MEETING

REVIEW of a Major Subdivision Concept Plan application proposing development of two parcels of property totaling 48 acres in area near the intersection of Whitfield Road (SR 1730) and Erwin Road (SR 1734-1737) into a 19 lot single-family residential subdivision.

Dear Property Owner:

The Orange County Planning Department has received a Major Subdivision Concept Plan application, submitted by Dr. Thomas Humphries care of Mr. Tom Heffner of Heffner Properties, Inc. proposing the development of a 19 lot single-family residential subdivision on two parcels of property near the intersection of Whitfield Road (SR 1730) and Erwin Road (SR 1734-1737).

The subject parcels are further identified utilizing Orange County Parcel Identification Numbers (PIN) 9891-80-0707 and 9891-60-4884, total of 48-acres in area, located within the Chapel Hill Township of Orange County, and are zoned Rural Buffer (RB). Please refer to the attached vicinity map for additional site and location details.

The proposed subdivision calls for the development of 19 single-family residential lots with the preservation of approximately 20.81 acres (43% of the of the subject parcels), as dedicated common open space. Single-family lot sizes range from 1 to1.4 acres with an overall density for the project of 1 dwelling unit per every 2.53 acres of property. All proposed lots within the subdivision shall be served by individual well and septic systems on each lot. Internal roadways shall be constructed to applicable NC Department of Transportation (NCDOT) standards with access being from an existing right-of-way to Erwin Road.

In accordance with Section 2.15.2 (D) of the Orange County Unified Development Ordinance (UDO) the County is required to hold a Neighborhood Information Meeting (NIM) for all major subdivision applications. This meeting is intended to provide adjacent property owners an opportunity to meet with the applicant and discuss the specifics of the project. This allows for an open dialogue between the applicant and local residents to share information and address potential concerns

associated with the project. Staff's role is to facilitate this meeting and explain the development review process and the requirements associated with the project.

A NIM has been scheduled for April 7, 2015 from 12:00-1:30pm in the ground floor conference room of the West Campus Office building located at 131 West Margaret Lane in Hillsborough. Please see attached map outlining the location of the building. Parking spaces are available within the adjacent, County owned, parking deck free of charge.

Please contact planning staff at (919) 245-2575 if you have nay immediate questions, concerns, or need assistance.

Sincerely,

Michael D. Harvey AICP, CFO, CZO
Current Planning Supervisor
Orange County

CC: File
Attachments: Vicinity map of Subject Property; Concept plan; NIM Vicinity Map

# HENDERSON WOODS SUBDIVISION AREA MAP

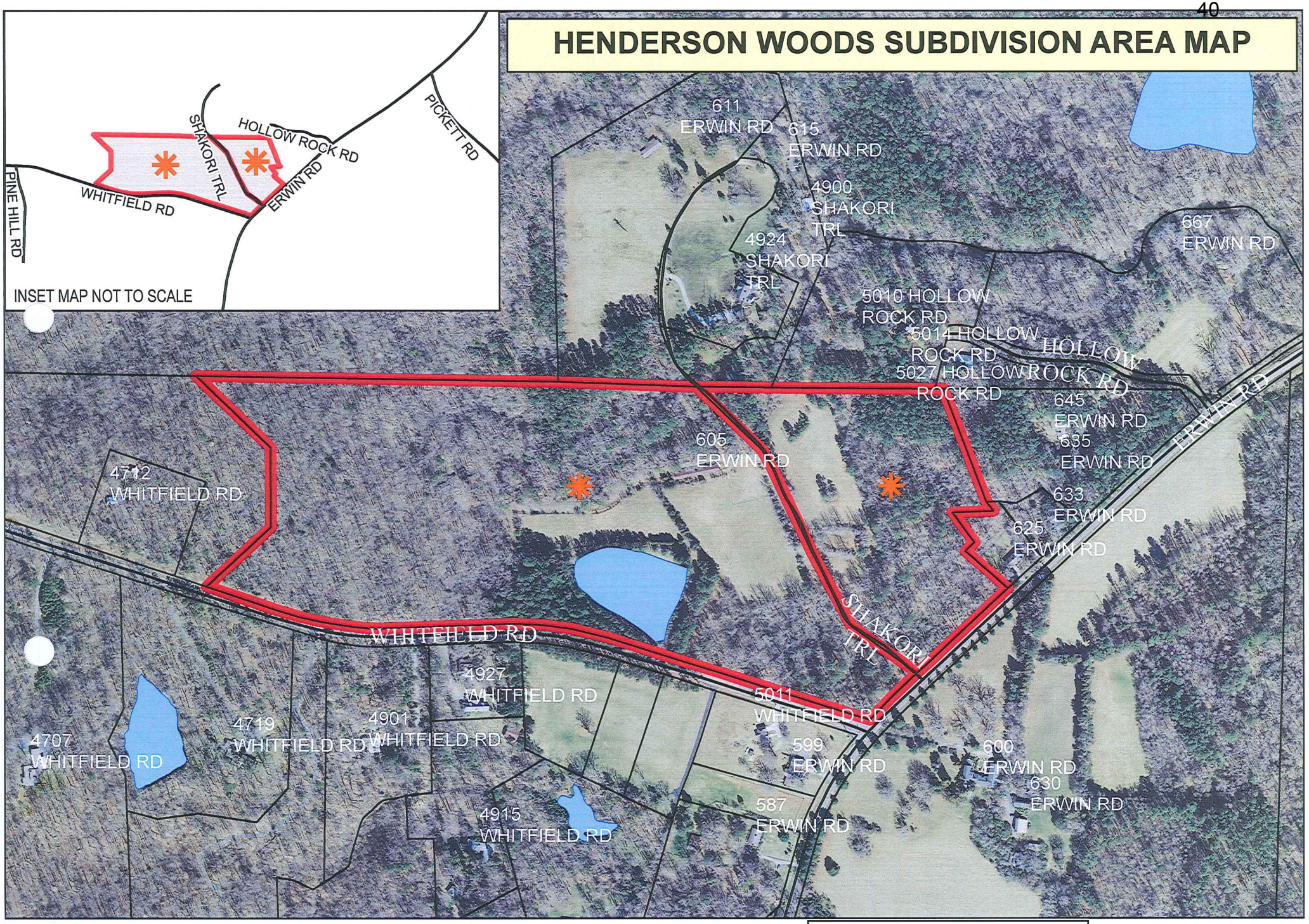


LOCATION OF PROPOSED HENDERSON WOODS SUBDIVISION

PARCELS

POND

Data shown on this map is obtained from Orange County GIS and is for reference only.
Exact locations and boundaries should be verified.
Map prepared by Orange County Planning & Inspections.
03/20/2015 - smschultz

N

1 inch = 400 feet

0 100 200 Feet

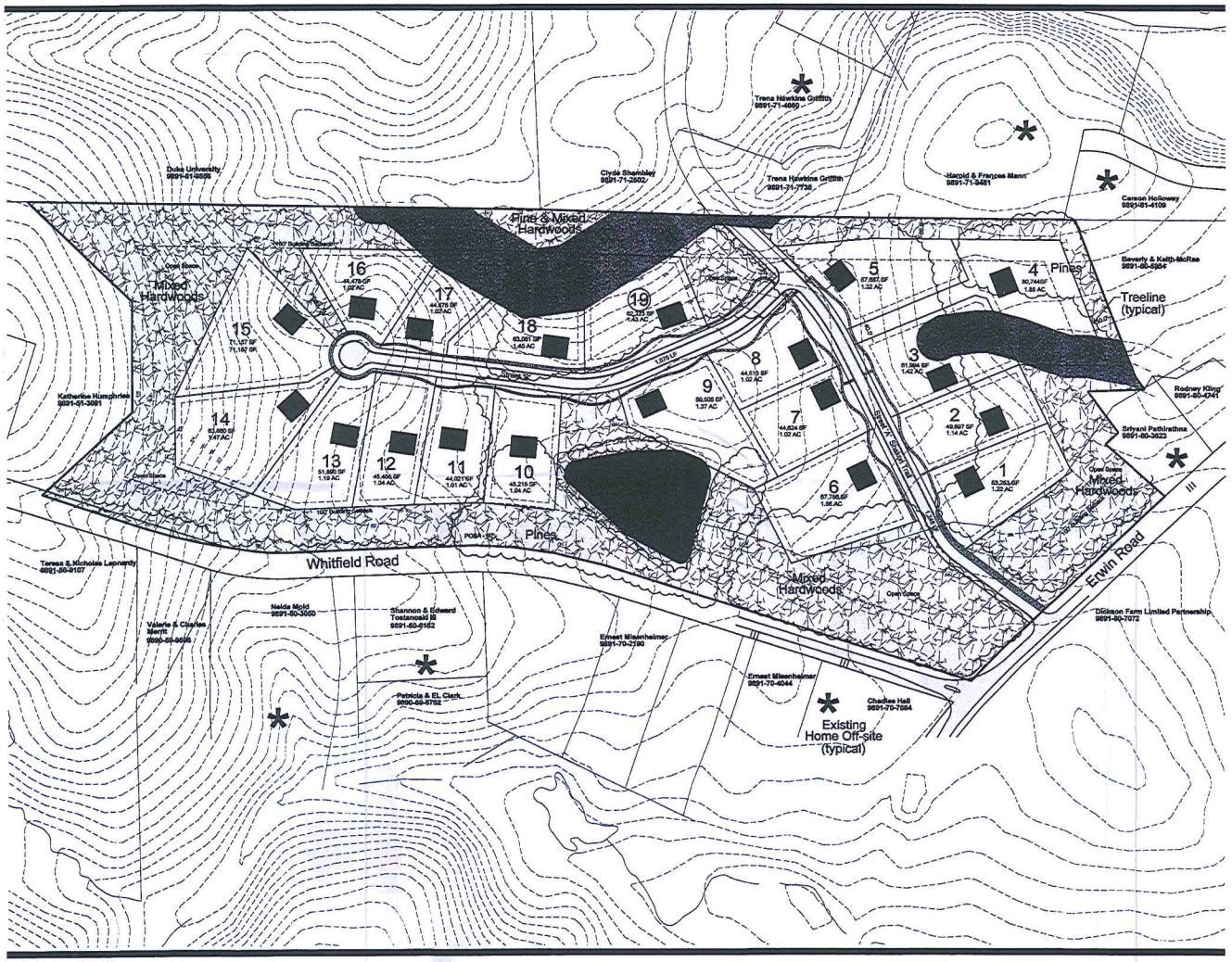


# Henderson Woods

Orange County, North Carolina

## Flexible Development Plan

### LEGEND

**Site Information**

Pin Number- 9891-80-0707 & 9891-60-4884
Acreage- 48.0 AC / 2,090,880 SF
Zoning- RB - Rural Buffer
Jordan Lake Unprotected - Watershed Overlay Zoning

**Site Data**

Number of Lots: 19 Lots
Lot Size: Min 1.0 AC
Front Setback 30' min., Side & Rear Setbacks 15' min.
Linear feet of existing roads: 1,245 LF
Linear feet of new roads: 1,075 LF

Land Use Buffer: NA but 100' buffer provided at St. Frontage (Existing Vegetation to Remain in Buffers)

Proposed Roads: Proposed roads will be 27' wide B-B w/ curb & gutter placed within a 50' Public R/W and will be constructed per NCDOT and Orange County standards

Open Space: 906,439 SF, 20.81 AC - 43% (Area in POSA - 16,902 SF, 0.38 AC - 1.9%)

Stream Buffer - Primary Conservation Area

Henderson Woods
Orange County, North Carolina
Flexible Development Plan

THE DESIGN RESPONSE
214 E. Chatham St. / P.O. Box 3585
Cary, NC 27519-3585
(919) 469-2080

NORTH

50' 0 100'

| DATE: | REVISION: |
|---|---|

| | |
|---|---|
| DATE: | 2/12/15 |
| SCALE: | 1"=100' |
| DRAWN BY: | EJK |
| JOB NO.: | 007-017 |
| SHEET NO. | 5 |
| OF 6 | SHEETS |

Attachment 5

Excerpt of Minutes

**Approved 7/1/2015**

MINUTES
PLANNING BOARD
JUNE 3, 2015
REGULAR MEETING

MEMBERS PRESENT: Peter Hallenbeck (Chair), Cheeks Township Representative; Lydia Wegman-At-Large Chapel Hill Township (Vice Chair); Tony Blake, Bingham Township Representative; Paul Guthrie, At-Large Chapel Hill Township; Buddy Hartley, Little River Township Representative; Bryant Warren, Hillsborough Township Representative; Laura Nicholson, Eno Township Representative; Lisa Stuckey, Chapel Hill Township Representative; Maxecine Mitchell, At-Large Bingham Township; Herman Staats, At-Large, Cedar Grove Township; James Lea, Cedar Grove Township Representative; Andrea Rohrbacher, At-Large Chapel Hill Township;

MEMBERS ABSENT: None

STAFF PRESENT: Craig Benedict, Planning Director; Michael Harvey, Current Planning Supervisor; Ashley Moncado, Special Projects Planner; Rachel McCook, Planning Technician; Erica Gray Administrative Assistant II;

AGENDA ITEM 7: MAJOR SUBDIVISION CONCEPT PLAN: To review and make a decision on a Major Subdivision Concept Plan (using the Flexible Design Option) application (Henderson Woods) seeking to subdivide a 48 acre parcel of property into 19 single family residential lots with 21.2 acres (44% of the site) held in common open space. The proposed subdivision is located at the intersection on Erwin Road and Whitefield Road in Chapel Hill Township.

Presenter: Michael Harvey, Current Planning Supervisor

Michael Harvey: Reviewed abstract.

Craig Benedict: To conceptionalize the difference between a conventional subdivision and this flexible conservation cluster. The conventional would give you 19 2.5 acre lots. The flexible with give you 19 1.2 acre lots and 21 acres of open space. Everyone living within the project would have a share of this common open space. This is the tendency over the last 10 years for people to have a smaller lot to have the extra space for common open space.

Tom Heffner: My name is Tom Heffner and I am the developer of Henderson Woods. I have done a number of subdivisions in the area, Creekwood, Northfield, etc. I felt it was more desirable to have open space rather than larger lots. We came in with a plan, got comments from staff and made modifications, had the neighborhood information meeting, listened to their comments and input, made revisions to the proposal based on those comments. Talked to NCDOT and made their modifications. We believe this proposal captures most concerns and represents a reasonable project for the area.

Pete Hallenbeck: The existing road that comes through and Michael said you can't get rid of the right of way but it would be limited to the occupants of technically the people in this subdivision couldn't use that road to get out onto Erwin.

Tom Heffner: NCDOT has been explicit in saying they didn't want that to become a secondary entrance because that road is so close to a signalized intersection. We would pave that road and put a gate on it so the folks who have a right to use it could open the gate to use it.

Andrea Rohrbacher: What about delivery trucks?

Tom Heffner: FedEx will be encouraged to use the subdivision streets rather than the private road.

Pete Hallenbeck: Is that road going to be taken off the GIS system as a road that segment there? If you don't it would show up for emergency responders as a valid route they could take.

Craig Benedict: Probably addressing off that road and emergency services has a point on Erwin Road where they expect to see that road. They will have an asterisk on it because of what has happened around it but my thought process is that if the address is off that road indicate the point of entry for those lots, it will remain on the GIS system.

Pete Hallenbeck: They are currently switching to a system of closely dispatch that looks for all possible roads and routes and there is no mechanism to show if the road is full access or not.

Michael Harvey: You will probably see that occur if the project is approved and recorded. This will remain as an easement (Mr. Harvey was pointing to a map of the identified easement area) but the road name will be removed.

Paul Guthrie: On the open space buffering outside the lot, what is going to be the legal long-term ownership and legal responsibility for that property?

Tom Heffner: It would be owned by a homeowner's association as incorporated body. Their legal documents would require their ownership and their maintenance of the property and then in turn there would be homeowner's dues paid by the people living in the subdivision that would fund that work on an ongoing basis.

Michael Harvey: If this is approved with a flexible development layout, there will be provisions in the resolution of approval as there are in all major subdivision based on the flexibility and design guidelines to preclude the clearing of the trees within the dedicated open space except for any activity recognized by the board such as the installation of a trial or recreation area.

Paul Guthrie: My question was about long term liability and things that take place on that and the ability or not of that being removed from open space.

Michael Harvey: This area could not be removed from open space unless the applicant came back to the county to request a modification of the major subdivision. I will state that we would probably object to it being removed because that is how it was originally approved and we are not interested in seeing dedicated open space turned into developed area.

James Lea: Does Lot 9 actually take up part of the pond?

Tom Heffner: Yes. The pond size will be modified. Since it is not a spring fed pond, in the summer when we have less rain, it drops significantly so my goal is that we will reduce the physical area of the pond to try to have a more stable water level. The line is showing the maximum size of the pond.

James Lea: What happens when you have flooding with the pond?

Tom Heffner: Earth Centric engineering is doing storm water plan we have had several meetings on how to handle that. We can increase the storm water flow downstream to the properties over to the right. We are

trying to utilize the pond as a storm water retention device so in maximum flow areas, the pond will serve to retain storm water so it will be release more gradually after the storm event is over.

Pete Hallenbeck: It looks like the drainage to the pond is out the center. Is that through a drain pipe?

Tom Heffner: I don't know.

Pete Hallenbeck: If it is, you should still have a cut away for hurricane events.

Tom Heffner: That will be part of the design.

Michael Harvey: I would like to remind the board that on pages 34 and 35, we have provide the board with an email exchange from David Sykes and Jason Shepard of Orange County Emergency Services as well as Mike Tapp who is the deputy chief of the local volunteer fire department indicating there are two existing water sites that would support fire suppression activity. The question was asked, does this pond need to be turned into a water source. Mr. Tapp has indicated it does need to be there as there are existing water sources they will take advantage of. We did not require a stand pipe for this pond.

Lydia Wegman: How many properties currently use Shakori Trail as an access point?

Tom Heffner: There are two properties. One property has two houses and the other has one building.

Lydia Wegman: There is no expectation of expansion?

Tom Heffner: Those people probably do have subdivision rights there.

Lydia Wegman: They would have rights?

Tom Heffner: Exactly.

Maxecine Mitchell: I take it the threshold for not having some type of recreational, are we going to be faced with someone saying I want to put a pool but I don't have enough impervious surface to do anything?

Michael Harvey: This parcel of property is not located in a protected or critical watershed overlay district so there is no impervious limit. There are open space requirements on the lots but nothing that would preclude them from putting in a pool. The applicant is providing walkways but they are electing to do a payment-in-lieu to the County allowing for regional park development. In other words the applicant will give the county money that will go to developing parks in the area.

James Lea: You said there would be walkways, does that mean sidewalks and if so, who maintains those sidewalks?

Tom Heffner: The homeowners association. I do a meandering concrete sidewalk behind the DOT street right of way. I am going to do sidewalk on both sides and then another section of sidewalk will come down toward the pond. The combination of sidewalks on both sides will give about a mile of walking trail.

Unidentified Female: Are these houses essentially like the ones in Creekwood?

Tom Heffner: Based on the probable lot size will be.

Unidentified Male: And the size of those houses will be?

Tom Heffner: I would guess will be between 4,000 to 6,000 feet. On restricted covenants, I tend to put a pretty low restrictive covenant number in. The minimum square footage will be 2,500 feet.

MOTION made by Lydia Wegman to approve the flexible development concept plan. Tony Blake seconded.
VOTE: Unanimous

Attachment 6

Approved 11/4/15

Excerpt of Minutes

# MINUTES
## PLANNING BOARD
## OCTOBER 7, 2015
## REGULAR MEETING

MEMBERS PRESENT: Peter Hallenbeck (Chair), Cheeks Township Representative; Lydia Wegman-At-Large Chapel Hill Township (Vice Chair); Tony Blake, Bingham Township Representative; Paul Guthrie, At-Large Chapel Hill Township; Buddy Hartley, Little River Township Representative; Laura Nicholson, Eno Township Representative; Lisa Stuckey, Chapel Hill Township Representative; Maxecine Mitchell, At-Large Bingham Township; Herman Staats, At-Large, Cedar Grove Township; James Lea, Cedar Grove Township Representative; Andrea Rohrbacher, At-Large Chapel Hill Township;

MEMBERS ABSENT: None

STAFF PRESENT: Craig Benedict, Planning Director; Michael Harvey, Current Planning Supervisor; Perdita Holtz, Planning Systems Coordinator; Ashley Moncado, Special Projects Planner; Patrick Mallett, Planner II;

OTHERS PRESENT: Phil Koch, PE Earth Centric Engineering, Inc.; Tom Heffner, Developer Heffner Properties, Inc.;

AGENDA ITEM 8: MAJOR SUBDIVISION PRELIMINARY PLAT: To review and make a recommendation on a Major Subdivision Preliminary Plat, Henderson Woods, located at the intersection on Erwin Road and Whitfield Road in Chapel Hill Township. The Plat is consistent with the Concept Plan Flexible Design Option reviewed and approved by the Planning Board in June 2015 The Plat shows 19 single-family residential lots on a 48 acre parcel of property with 21.51 acres (44.9% of the site) held in common open space.

Presenter: Patrick Mallett, Planner II

Patrick Mallett reviewed the abstract and presentation.

Tony Blake: On page 34, is that table looking at the perc sites on those lots?

Patrick Mallett: Yes the septic systems will all be contained on the lots; the wells may or may not. The goal is to have every lot have an onsite septic and well. There are a few situations where that may not be the case.

Maxecine Mitchell: Will the access road from Erwin Road remain private? And will the landowners be able to use it?

Patrick Mallett: The access road is private and has access agreements with the existing property owners. The easement will continue as it is currently aligned with the gravel road and will become a paved road with a gate that will allow access for the property owners to continue use.

Lydia Wegman: Is there any comments from the neighbors we should be aware of?

Patrick Mallett: They have been resolved or were general questions regarding the nature of the request such as lot size, density, rural buffer, and how does a cluster neighborhood work. There was one resident that had questions about environmental sensitive areas so the applicant got the wetlands flagged and surveyed. The applicant is going through the process for the wetlands permit with the state.

Paul Guthrie: I want to come back to septic and well. Looking at the preliminary sketch and the septic field areas and wells, is everyone comfortable with the nature of the property and that there is sufficient separation to not overload the groundwater areas around the wells?

Patrick Mallett: Based on the applicant's experience they are familiar with the soils in the area and lay of the land. There has been enough due diligence to figure out where to have the well sites and the available suitable soils for the sceptics.

Paul Guthrie: I assume that with the areas drawn on the site plan that there is sufficient area for a single family septic system?

Patrick Mallett: Yes, for the system and repair.

Paul Guthrie: You said the pond is pretty shallow which suggests to me there is not such pristine water. I was wondering if that was thought about in terms of the overall plan?

Patrick Mallett: The pond is shallow because of sedimentation. I would say the waters are pretty clear. Environmental Health has their rules and regulations that will have to be met.

Pete Hallenbeck: The key concept here is that Environmental Health has looked at this and they are happy with the well positions.

Patrick Mallett: Yes, they have.

James Lea: How many homes will share wells?

Patrick Mallett: Environmental Health limits you to two.

James Lea: What happens when we have a drought when you are sharing one well?

Tom Heffner: Typically the deep wells put in subdivisions today are not affected by droughts. They are deep enough to provide an adequate flow. On any lot that has shared wells I would go ahead and drill the well before we sell the lot to determine the capacity of the well. The last thing we would want to happen is to sell someone a lot and they don't have water on it.

Tony Blake: Is there a well to be capped and a septic system to be abandoned?

Tom Heffner: Correct. The septic has already been abandoned and the well will be capped. Both of these are from an existing home which will need to be removed.

MOTION made by Buddy Hartley to recommend approval of the preliminary plat. Lisa Stuckey seconded.
VOTE: Unanimous.

Attachment 7

RES-2015-067

**RESOLUTION**
**OF THE**
**ORANGE COUNTY BOARD OF COUNTY COMMISSIONERS**

**Date:** December 7, 2015

**Name of Subdivision:** Henderson Woods

**Owner/Applicant**: Humphries Family LLC
4712 Whitfield Road
Durham, NC 27707

Henderson Woods Inc.
6315 Howie Mine Church Rd
Waxhaw, NC 28173

**Agent(s):** Earth Centric Engineering
204 W. Clay Street
Mebane, NC 27302

The Board of County Commissioners hereby approves Henderson Woods Preliminary Subdivision Plat, dated November 18, 2015, containing the following:

- 19 lots slated for single-family residential development with a density of one (1) dwelling unit per every 2.52 acres of land area;
- 3 public roadways, specifically named "Martin Madden Way, Henderson Woods Lane and Shakori Trail" constructed to North Carolina Department of Transportation public road standards;
- The preservation of 21.5 acres (44.9% of land area) of Primary and Secondary open space as denoted on the Preliminary Plat;
- A 30-foot wide roadside buffer along Whitfield Road (S.R. 1731) and Erwin Road (SR 1734); and
- A 100-foot wide perimeter building setback around the exterior perimeter of the project.

The approval of this resolution authorizes and directs the Orange County Manager to accept for Orange County and on behalf of the public generally, the offer of dedication of all publically offered areas/easements, including rights-of-way for the public portions of roads named "Martin Madden Way, Henderson Woods Lane and Shakori Trail" without maintenance responsibility.

Per the Orange County Unified Development Ordinance (UDO) the applicant shall maintain all common areas and proposed roadways until such time as it is accepted for maintenance by a local homeowners association, the North Carolina Department of Transportation, or some other governmental body.

Before the Final Plat of Henderson Woods can be approved by the Planning Department and recorded within the Orange County Registrar of Deeds office the following conditions shall be addressed:

## A. Declaration of Restrictions

1. The Orange County Planning Department shall author a Declaration of Restrictions (hereafter 'the document') establishing and describing the various development restrictions, standards, conditions, and requirements associated with development of, and within, the project.

   The document shall be recorded concurrently with the Final Plat and approved, as to form and content, by the applicant and the County Attorney.

2. The document is not intended to serve, supplant, or take the place of any document recorded by the applicant establishing local homeowner covenants, or deed restrictions enforced by either the applicant or an established homeowners association.

## B. Sewage Disposal

1. Each residential lot shall contain an adequate area for septic disposal and repair area, approved by the Orange County Division of Environmental Health.

2. The septic system location may restrict the size and location of improvements.

   The document shall contain this statement and further indicate information regarding the tentative location of septic systems is available from the Orange County Health Department, Division of Environmental Health.

   Each lot that does not contain a suitable building site shall be designated both on the Final Plat and by instrument recorded in the Orange County Registrar of Deeds as restricted for development potential as set forth in the UDO.

3. The owner/applicant shall not destroy trees located within identified land use buffers, stream buffers, open space areas, or tree protection areas denoted on the Final Plat for the installation of on-site waste disposal system drain or repair fields.

4. No septic system shall be located within a required stream buffer as detailed within the UDO.

5. The Owners shall include in the restrictive covenants provisions requiring each lot owner to have the septic system serving their lot inspected by a licensee of the North Carolina On-Site Wastewater Contractors and Inspectors Certification Board, who is properly registered to perform such inspections within Orange County, no less than one (1) time in every five (5) year period (unless inspections are required more often by rule or regulation of the Orange County Health Department) and to have the system pumped if recommended by the inspector.

Payment for the inspections required under this condition shall be the responsibility of the individual lot owner or the homeowner's association as established by the governing Homeowner's Association declaration. These provisions shall be in a form approved by the County Attorney.

**C. Wells**

1. Each residential lot shall contain an adequate area for the development of a well to provide potable water supporting development of the property as approved by the Orange County Division of Environmental Health.

**D. Roads and Access**

1. Martin Madden Way, Henderson Woods Lane and the public portions of Shakori Trail shall be constructed to the standards of the North Carolina Department of Transportation in accordance with the approved Preliminary Plat.

   Each public roadway, as well as the proposed stormwater management system, shall be located within a minimum 50-foot right-of-way, with 5-foot utility easements on each side. Construction shall be inspected and approved by NCDOT.

   **OR**

   A letter of credit or escrow agreement shall be submitted to secure construction of the aforementioned roadways to the standards of the North Carolina Department of Transportation in accordance with the provisions of the UDO.

   An estimate of the construction cost must be prepared by a certified/licensed engineer or grading contractor and submitted to the Planning and Inspections Department. The financial guarantee must reflect 110% of that estimate and be issued by an accredited financial institution licensed to do business in North Carolina.

   In this instance, the document shall state posted financial guarantee(s) will not be released until the road construction has been inspected and approved by NCDOT.

2. All lots shall receive access from the internal subdivision roads as depicted on the approved Preliminary Plat. No driveway access for any of the lots shall be permitted off of Whitfield or Erwin Road.

3. An erosion control and stormwater management plan for construction for the aforementioned roadways shall be submitted by the applicant to the Orange County Erosion Control Division for review and approval prior to any land disturbing activity on the site in accordance with the UDO.

4. Approved double-bladed street name signs shall be erected at the intersections of public and private streets prior to Planning Department signatures on the Final Plat or prior to issuance of any building permit if road construction is secured by letter of credit as described herein.

5. Prior to any construction or alteration of any existing access within the right-of-way of either Whitfield or Erwin Road, the owner/applicant shall secure a driveway permit from the NCDOT District Office.

   The owner/applicant shall submit a copy of the NCDOT-approved permit and NCDOT approval letter to the Planning Department prior to, or at the same time as, the request for a grading permit is made, or before Planning Department signatures are affixed on the Final Plat, whichever is first.

6. Sight triangles (10' x 70') shall be shown on the Final Plat at the intersection with each of the aforementioned roadways and Whitfield Road.

**E. Land Use Buffers and Landscaping**

1. The 30-foot wide land use buffer along both Whitfield and Erwin Roads, identified on the approved Preliminary Plat, shall be preserved in perpetuity in accordance with the provisions of the UDO. The document, as well as any local covenants, shall require the applicant or future homeowners association to preserve the required land use buffer.

2. Trees within the tree protection area denoted on the approved Preliminary Plat shall be preserved as proposed by the applicant.

3. Upon completion of roadway improvements Planning Department staff shall complete an inspection in the area to ascertain if additional roadway plantings are required in accordance with the provision(s) of the UDO.

   In the event additional plantings are required, the applicant shall submit a formal landscape plan re-establishing required vegetation. The owner/applicant shall install landscaping as indicated on the approved Landscape Plan and the Planning Department shall inspect and approve such landscaping before signing the Final Plat. It should be noted no part of any additional landscaping shall encroach into the ten (10) foot by seventy (70) foot sight triangles at the public road intersection.

   OR

   The owner/applicant shall submit a letter of credit or cash bond to secure required landscape installation and preservation. The owner/applicant shall provide, as specified within the UDO, an estimate of the cost for required preservation, plantings and their installation. The financial guarantee shall reflect 110% percent of the estimate and be issued by an accredited financial institution licensed to do business in North Carolina.

4. Provision for protection of existing trees shall be included in the Final Plat, as well as the recorded Declaration of Restrictions as prepared by the Orange County Planning Department.

5. Clear cutting or other removal of any trees or other vegetation on individual lots is prohibited as specified within the UDO. This requirement shall be further evidenced within the subdivision's recorded Declaration of Restrictions and the Final Plat.

6. The Landscape Plan will detail required tree plantings along common property lines for each of the 19 proposed lots. Development of each individual lot shall necessitate the submittal of a landscape plan providing documentation on the installation and/or preservation of existing vegetation to comply with established landscaping requirements detailed within the UDO.

7. The stream buffer areas denoted on the approved Preliminary Plat shall be left in an undisturbed, natural state with the exception of the approved pedestrian bridge and accompanying pedestrian pathway installed consistent with the parameters of the UDO.

**F. Drainage**

1. The applicant shall submit a final stormwater management and erosion control plan for approval by Orange County Erosion Control prior to the commencement of land disturbing activities.

2. Drainage easements shall be located on the Final Plat as required following review and approval of the stormwater management plan by Erosion Control staff.

3. Drainage culverts shall be sized and located appropriately, as required by NCDOT and Erosion Control, by a licensed North Carolina Professional Engineer.

**G. Emergency Services**

1. Final design capacity and flow rates for a proposed water feature intended to serve as an emergency water access point for fire department/emergency services personal shall be approved by the Fire Marshal prior to the commencement of land disturbing activities.

**H. Parkland**

1. At the time of recordation of the Final Plat, the applicant shall pay to Orange County $8,645.00 ($455.00 times 19 lots) payment-in-lieu-of-parkland dedication fee.

**I. Construction Waste**

1. Per Orange County Ordinance, clean wood waste, scrap metal and corrugated cardboard and all present construction waste, must be recycled.

2. Per Orange County Ordinance, all haulers of construction waste must be properly licensed.

3. Prior to any demolition or construction activity on the site the applicant will hold a pre-demolition/pre-construction conference with the County's Solid Waste staff. This may be the same meeting held with other development

officials.

**J. Miscellaneous**

1. The Final Plat shall contain a title block and vicinity map in accordance with the UDO.

2. The open space shall be conveyed into the Homeowner's Association before Planning Department signatures are affixed to the final plat.

3. Tree cutting in the delineated land use buffers along the perimeter of the project as well as Whitfield and Erwin Roads is prohibited except for necessary maintenance purposes, which has to be approved by County staff prior to any such tree cutting taking place.

4. Tree cutting/disturbance of flora within identified stream buffers shall only be permitted as detailed within the Orange County Unified Development Ordinance.

5. If street lighting is proposed, then a lighting plan shall be submitted to the Planning Department for review and approval prior to purchase of lighting fixtures from the utility provider.

   Any lighting shall meet the Outdoor Lighting Standards as set forth in the UDO.

6. A sign permit shall be obtained from Orange County for the subdivision sign located at or near the entrance of the subdivision prior to beginning construction.

7. Methods of disposal of trees, limbs, stumps and construction debris associated with construction activity shall be by some method other than open burning as required in the UDO.

**K. Certifications**

1. A Certificate of Survey and Accuracy signed by a Professional Land Surveyor shall be notarized on the face of the Final Plat.

2. A Certificate of Declaration and Maintenance in the form provided in the UDO signed by the landowner and developer shall be on the face of the plat and included in a document describing development restrictions to be recorded concurrently with the Final Plat.

3. The North Carolina Department of Transportation shall certify that the platted portions of Martin Madden Way, Henderson Woods Lane, and the public portions of Shakori Trail have been entirely constructed to State standards or that construction plans have been approved prior to Planning Department signatures on final plat.

4. A Certificate of Approval signed by the Orange County Planning and

Inspections Department shall appear on the face of the final plat.

5. All other required certificates detailed within the UDO, applicable to the project, shall be placed on the Final Plat for signature.

NOW THEREFORE BE IT RESOLVED by the Board of Orange County Commissioners that the Preliminary Plan for Henderson Woods Subdivision is approved in accordance with the above mentioned conditions and attached Preliminary Plat dated _____.

Upon motion of Commissioner _____, seconded by Commissioner _____, the foregoing resolution was adopted this the _____ day of _____, 2015.

I, Donna S. Baker, Clerk to the Board of Commissioners for the County of Orange, North Carolina, DO HEREBY CERTIFY that the foregoing is a true copy of so much of the proceedings of said Board at a meeting held on _____, 2015 as relates in any way to the adoption of the foregoing and that said proceedings are recorded in Minute Book No. _____ of the minutes of said Board.

WITNESS my hand and the seal of said County, this _____ day of _____, 2015.

_____
Clerk to the Board of Commissioners

PIN# 9891-80-0703 & 9891-60-4884

ATTACHMENT 8

# MAJOR SUBDIVISION PLAN FOR
# HENDERSON WOODS
## 605 ERWIN ROAD, DURHAM NC 27707

### ECE GENERAL NOTES

GENERAL NOTES

1. EXISTING BOUNDARY AND TOPOGRAPHIC INFORMATION TAKEN FROM SURVEY DATA SUPPLIED BY R. S. JONES AND ASSOCIATES, INC.
2. WORK WITHIN PUBLIC RIGHT-OF-WAYS SHALL BE IN ACCORDANCE WITH ALL FEDERAL, STATE AND LOCAL REQUIREMENTS, NOTIFICATIONS, STANDARDS AND POLICIES.
3. CONTRACTOR SHALL BE RESPONSIBLE FOR TRAFFIC CONTROL MEASURES FOR ALL WORK W/IN PUBLIC R/W PER THE MANUAL ON UNIFORM TRAFFIC CONTROL DEVICES FOR STREETS AND HIGHWAYS AND THE N.C. SUPPLEMENT TO THE MUTCD, AND LOCAL CITY INSPECTORS DIRECTION.
4. ALL CONSTRUCTION SHALL BE PERFORMED IN ACCORDANCE WITH THE PROJECT PLANS AND/OR SPECIFICATIONS, LOCAL STANDARD DETAILS AND CONSTRUCTION STANDARDS, STATE CONSTRUCTION STANDARDS, AND OTHER APPLICABLE CONTRACT DOCUMENTS.
5. CONTRACTOR IS FULLY RESPONSIBLE FOR CONTACTING ALL APPROPRIATE PARTIES AND ASSURING THAT UTILITIES ARE LOCATED PRIOR TO THE COMMENCEMENT OF CONSTRUCTION. CALL NC ONE CALL (PREVIOUSLY ULOCO) AT 1-800-632-4949 FOR UTILITY LOCATING SERVICES 48 HOURS PRIOR TO COMMENCEMENT OF ANY WORK. CONTRACTOR SHALL VERIFY LOCATION AND DEPTH OF ALL EXISTING UTILITIES PRIOR TO CONSTRUCTION.
6. UNDERGROUND UTILITIES SHOWN USING BEST AVAILABLE INFORMATION. ALL LOCATIONS SHALL BE CONSIDERED APPROXIMATE ONLY. THERE MAY BE MORE UNDERGROUND UTILITIES THAN ARE SHOWN HEREON. CONTRACTOR SHALL FIELD LOCATE ALL UTILITIES PRIOR TO ANY EXCAVATIONS.
7. CONTRACTOR SHALL BE RESPONSIBLE FOR PROTECTING ALL EXISTING UTILITIES TO REMAIN DURING ALL DEMOLITION AND CONSTRUCTION ACTIVITIES.
8. ALL CLEARING, GRUBBING AND UNSUITABLE FILL MATERIAL SHALL BE DISPOSED OF LEGALLY.
9. ALL PAVEMENT, CURB, STORM DRAINAGE PIPE, AND STRUCTURES TO BE REMOVED SHALL BE HAULED OFFSITE AND DISPOSED OF LEGALLY.
10. SIGNAGE SHALL BE LOCATED AS SHOWN. SIGNAGE SHALL BE CONSTRUCTED IN ACCORDANCE WITH LOCAL STANDARDS.
11. SITE LIGHTING SHALL AS SHOWN, AND SHALL BE SUFFICIENT TO PROPERLY ILLUMINATE THE SITE IN ACCORDANCE WITH LOCAL STANDARDS.
12. LANDSCAPING SHALL BE INSTALLED IN THE PROVIDED YARDS, IN ACCORDANCE WITH LOCAL STANDARDS.
13. NO SIGHT OBSTRUCTING OR PARTIALLY OBSTRUCTING WALL, FENCE, FOLIAGE, BERMING, PARKED VEHICLES OR SIGNS BETWEEN THE HEIGHT OF TWENTY-FOUR (24) INCHES AND EIGHT (8) FEET ABOVE THE CURB LINE ELEVATION, OR NEAREST TRAVELED WAY IF NO CURBING EXISTS, SHALL BE PLACED WITHIN A SIGHT TRIANGLE OF A PUBLIC STREET, PRIVATE STREET OR DRIVEWAY CONTAINED ON THE PROPERTY OR ON AN ADJOINING PROPERTY.
14. ALL LOTS SHALL BE SERVED BY WELL AND SEPTIC.
15. SIDEWALK LOCATION IS CONCEPTUAL AND IS TO BE FIELD LOCATED DURING CONSTRUCTION.

**CONTRACTOR SHALL NOT MAKE ANY MODIFICATIONS TO THE APPROVED DRAWINGS WITHOUT PRIOR APPROVAL OF BOTH THE DESIGN ENGINEER AND LOCAL INSPECTOR.**

GRADING & STORM DRAINAGE NOTES:

1. ALL CONSTRUCTION SHALL BE IN ACCORDANCE WITH THE LOCAL CONSTRUCTION STANDARDS, SPECIFICATIONS, AND PROCEDURES AND THE NCDENR'S SEDIMENTATION AND EROSION CONTROL STANDARDS, SPECS., AND PROCEDURES.
2. CONTRACTOR SHALL VERIFY THAT ALL APPLICABLE STATE AND LOCAL PERMITS REQUIRED FOR THE COMMENCEMENT OF GRADING OPERATIONS HAVE BEEN OBTAINED PRIOR TO START OF GRADING.
3. CONTRACTOR SHALL BE RESPONSIBLE FOR FIELD VERIFICATION OF ALL EXISTING UTILITIES PRIOR TO THE BEGINNING OF DEMOLITION AND/OR CONSTRUCTION.
4. CONTRACTOR SHALL BE RESPONSIBLE FOR PROTECTING ALL EXISTING UTILITIES TO REMAIN DURING ALL CONSTRUCTION ACTIVITIES.
5. ALL STORMWATER MANAGEMENT FACILITIES SHALL BE DESIGNED AND CONSTRUCTED TO MEET ALL STATE AND LOCAL REQUIREMENTS, INCLUDING THE STATE STANDARDS FOR WATER QUALITY AND DETENTION FACILITIES (CURRENT EDITION).
6. EROSION CONTROL MEASURES SHALL BE PROVIDED ACCORDING TO THE EROSION CONTROL PLAN AND AS NEEDED TO PROTECT ADJACENT PROPERTIES.
7. CONTRACTOR SHALL PROVIDE ALL STAKING, FLAGGING AND/OR FENCING NECESSARY TO PROVIDE PROPER PROTECTION OF THE STREAM BUFFER.

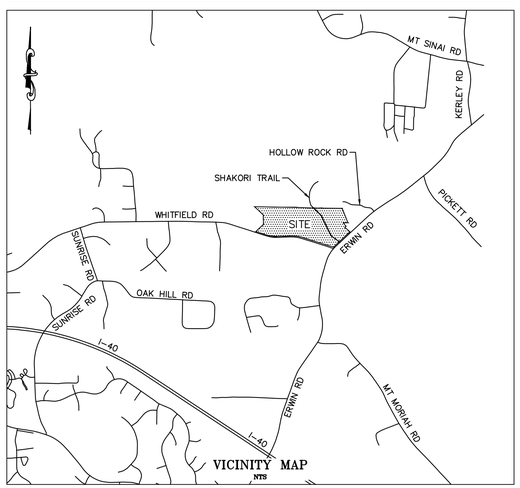


VICINITY MAP

### LEGEND

| | NEW | EXISTING |
|---|---|---|
| PROPERTY LINE | | |
| EASEMENT | | |
| SETBACK | | |
| RIGHT-OF-WAY | | |
| CENTERLINES | | |
| CURB & GUTTER | | |
| EDGE OF PAVEMENT | | |
| SIDEWALK | | |
| CREEK | | |
| STRUCTURE NO. | 1 | |
| CATCH BASIN | | |
| YARD INLET | | |
| STORM DRAINAGE JUNCTION BOX | | |
| CURB INLET | | |
| SANITARY SEWER MANHOLE | | |
| SANITARY SEWER CLEANOUT | C.O. | C.O. |
| METER BOX | | |
| VALVE | | |
| FIRE HYDRANT | | |
| FIRE DEPARTMENT CONNECTION | | |
| LIGHT POLE | LP | |
| UTILITY POLE AND GUY WIRE | PP | PP |
| CABLE TV LINE | TV | XTV |
| ELECTRIC | E | XE |
| FIBER OPTIC CABLE | FO | XFO |
| GAS LINE | G | XG |
| OVERHEAD UTILITY LINE | OH | XOH |
| SANITARY SEWER | SS | XSS |
| STORM DRAIN PIPE | SD | XSD |
| TELEPHONE | T | XT |
| WATER LINE | W | XW |
| GRADE CONTOUR | 400 | |
| FINISHED GRADE SPOT ELEVATION | 356.44 | x 356.44 |
| CLEARING LIMIT/TREE LINE | | |
| LIMITS OF DISTURBANCE | | |
| DITCH OR SWALE FLOWLINE | | |
| TREE PROTECTION FENCE | | |
| SILT FENCE | SF | SF |
| FENCE | X | X |
| RIP RAP APRON | | |
| CHECK DAM | | |
| SEDIMENT FENCE OUTLET | | |
| INLET PROTECTION | | |
| ELECTRICAL TRANSFORMER | T | |

| | |
|---|---|
| EIP EXISTING IRON PIPE | ○ |
| EIR EXISTING IRON ROD | ● |
| IPS IRON PIPE SET | ⦿ |
| PKS PK NAIL SET | X |
| CP COMPUTED POINT | ⊗ |

NOTATION ON PROPOSED ROADWAYS

THE DEVELOPER ACKNOWLEDGES THAT ANY AND ALL PROPOSED ROAD NAMES SHALL BE SUBMITTED TO ORANGE COUNTY LAND RECORDS FOR REVIEW AND APPROVAL PRIOR TO RECORDATION TO ENSURE THAT THE NAMES MEET THE COUNTY'S ADDRESSING ORDINANCES AND POLICIES. THE DEVELOPER FURTHER UNDERSTANDS THAT SHAKORI TRAIL IS THE NAME OF A CURRENT PRIVATE ROAD AND AT THIS TIME IT IS UNDETERMINED WHETHER THE NAME WOULD REMAIN WHEN CONVERTED TO A PUBLIC ROAD.

ORANGE COUNTY SOLID WASTE NOTES

1. ALL EXISTING STRUCTURES 500 SQUARE FEET AND LARGER IN SIZE SHALL BE ASSESSED PRIOR TO DEMOLITION TO ENSURE COMPLIANCE WITH THE COUNTY'S REGULATED RECYCLABLE MATERIALS ORDINANCE (RRMO) AND TO ASSESS THE POTENTIAL FOR DE-CONSTRUCTION AND/OR THE RE-USE OF SALVAGEABLE MATERIALS.
2. BY ORANGE COUNTY ORDINANCE, CLEAN WOOD WASTE, SCRAP METAL, AND CORRUGATED CARDBOARD PRESENT IN CONSTRUCTION OR DEMOLITION WASTE MUST BE RECYCLED.
3. BY ORANGE COUNTY ORDINANCE, ALL HAULERS OF MIXED CONSTRUCTION AND DEMOLITION WASTE THAT INCLUDES ANY REGULATED RECYCLABLE MATERIALS SHALL BE LICENSED BY ORANGE COUNTY.
4. PRIOR TO ANY DEMOLITION OR CONSTRUCTION ACTIVITY ON THE SITE THE APPLICANT SHALL HOLD A PRE-DEMOLITION/PRE-CONSTRUCTION CONFERENCE WITH THE SOLID WASTE STAFF. THIS MAY BE THE SAME PRE-CONSTRUCTION MEETING HELD WITH OTHER DEVELOPMENT/ENFORCEMENT OFFICIALS.
5. THE PRESENCE OF ANY ASBESTOS CONTAINING MATERIALS (' ACM') AND/OR OTHER HAZARDOUS MATERIALS IN CONSTRUCTION AND DEMOLITION WASTE SHALL BE HANDLED IN ACCORDANCE WITH ANY AND ALL LOCAL, STATE, AND FEDERAL REGULATIONS AND GUIDELINES.

PROJECT DATA

SITE INFORMATION:

| | |
|---|---|
| OWNER PARCEL 1: | HUMPHRIES FAMILY, LLC |
| PIN NUMBER PARCEL 1: | 9891-60-4884 |
| DEED REF PARCEL 1: | BOOK 2027, PAGE 561 |
| ACREAGE PARCEL 1: | 36.11 ACRES BY SURVEY |
| OWNER PARCEL 2: | HENDERSON WOODS, INC. |
| PIN NUMBER PARCEL 2: | 9891-80-0703 |
| DEED REF PARCEL 2: | BOOK 5892, PAGE 471 |
| ACREAGE PARCEL 2: | 11.84 ACRES BY SURVEY |
| SITE TOTAL: | 47.95 ACRES |
| ZONING: | RB - RURAL BUFFER |
| WATERSHED: | JORDAN LAKE UNPROTECTED OVERLAY |
| TOWNSHIP: | 7 |
| SCHOOL DISTRICT: | CHAPEL HILL - CARRBORO |
| FIRE DISTRICT: | NEW HOPE |

PROPOSED SITE DATA:

| | |
|---|---|
| NUMBER OF LOTS: | 19 WELL & SEPTIC LOTS |
| AVERAGE LOT SIZE: | 1.23 ACRES |
| MIN. LOT SIZE: | 1.00 ACRES |
| OVERALL DENSITY: | 19 LOTS / 47.95 ACRES<br>1 UNIT PER 2.52 ACRES |
| LINEAR FEET OF NEW ROADS: | 2,120 LF |
| ACRES IN OPEN SPACE: | 21.73 ACRES |
| SLOPES >15% DISTURBED: | ~6,000 SF |
| FRONT SETBACKS: | 30' |
| SIDE & REAR SETBACKS: | 15' |
| LAND USE BUFFER: | N/A BUT 100' BUFFER PROVIDED ALONG PERIMETER OF SITE (EXISTING VEGETATION TO REMAIN) |

PROPOSED ROADWAY DATA:

ROAD "A"
- 0.45 ACRES RIGHT-OF-WAY
- 441 LINEAR FEET OF CENTER LINE
- 10,969 SF IMPERVIOUS AREA

ROAD "B"
- 1.39 ACRES RIGHT-OF-WAY
- 1,125 LINEAR FEET OF CENTER LINE
- 34,475 SF IMPERVIOUS AREA

SHAKORI TRAIL (NEWLY CONSTRUCTED PORTION)
- 1.05 ACRES IN RIGHT-OF-WAY
- 554 LINEAR FEET OF CENTER LINE
- 21,242 SF IMPERVIOUS AREA

ACCESS EASEMENT (FORMER SHAKORI TRAIL, PARTIAL OVERLAP WITH NEW PUBLIC RIGHT-OF-WAY)
- 1227 LINEAR FEET @ CENTER LINE

OPEN SPACE CALCULATIONS:

PER SECTION 7.13.3 (C) (1) AND (2) OF THE ORANGE COUNTY UNIFIED DEVELOPMENT ORDINANCE (UDO) OPEN SPACE FOR THE PROJECT IS BROKEN DOWN AS FOLLOWS:

PRIMARY:
- WETLANDS INCLUDING BUT NOT LIMITED TO STREAMS, CREEKS, PONDS, RESERVOIRS ETC: 4.02 ACRES OF OPEN SPACE OF STREAM BUFFER AROUND EXISTING STREAMS.

SECONDARY:
- PERIMETER BUFFER - 100 FOOT NATURAL BUFFER AROUND THE PERIMETER OF THE PROJECT: 12.61 ACRES
- WOODLANDS - PRESERVATION OF EXISTING FORESTED AREA AS OPEN SPACE: 4.88 ACRES ADDITIONAL OPEN SPACE ADJACENT TO 100' PERIMETER BUFFER AND OUTSIDE PROPOSED LOTS.

TOTAL: 21.51 ACRES OR 44.9%

IMPERVIOUS SURFACE CALCULATIONS:

| | |
|---|---|
| IMPERVIOUS AREA FOR ROAD "A" = | 0.25 ACRES (10,969 SF) |
| IMPERVIOUS AREA FOR ROAD "B" = | 0.79 ACRES (34,475 SF) |
| IMP. AREA FOR NEW SHAKORI TRAIL = | 0.49 ACRES (21,242 SF) |
| IMP. AREA, REMAINDER PRIVATE DRIVE = | 0.15 ACRES (6,383 SF) |
| TOTAL R/W IMPERVIOUS AREA = | 1.68 ACRES (73,069 SF) |

PER LOT IMPERVIOUS AREA

| | |
|---|---|
| BUILDING FOOTPRINT = | 3,600 SF |
| DRIVEWAY = | 1,000 SF |
| PATIOS & SIDEWALKS = | 400 SF |
| TOTAL IMPERVIOUS ON EACH LOT = | 5,000 SF |
| X 19 LOTS = TOTAL IMPERVIOUS ON LOTS | 2.18 ACRES (95,000 SF) |
| TOTAL R/W IMPERVIOUS = | 1.68 ACRES (73,069 SF) |
| TOTAL STREET SIDEWALK = | 0.44 ACRES (19,297 SF) |
| TOTAL LOT IMPERVIOUS = | 2.18 ACRES (95,000 SF) |
| TOTAL PROPOSED PROJECT IMP. = | 4.30 ACRES (187,336 SF) |

**14-044 HENDERSON WOODS IMPERVIOUS SURFACE TABLE**

| | Existing | Proposed |
|---|---|---|
| Gross Land Area (GLA): | 2,088,766 | 2,088,766 |
| | | |
| **Residential Impervious** | | |
| Roadway | 0 | 66,686 |
| Driveway | 27,113 | 25,383 |
| Parking Lot | 0 | 0 |
| Roof | 5,929 | 68,400 |
| Sidewalk / Patio | 0 | 26,897 |
| | | |
| **Pervious Area** | | |
| Managed Pervious | 277,629 | 0 |
| Lawn (Residential) | 0 | 892,192 |
| Forest | 1,457,180 | 707,973 |
| | | |
| **Jurisdictional Lands** | | |
| Natural Wetland | 46,847 | 46,847 |
| Riparian Buffer | 193,648 | 193,648 |
| Open Water | 80,420 | 60,740 |
| | | |
| Land Taken Up By BMP | 0 | 0 |
| | | |
| Total All Areas: | 2,088,766 | 2,088,766 |
| Total Impervious Area: | 33,042 | 187,366 |
| Total Impervious % | 1.58% | 8.97% |

SURVEYOR/ARCHITECT:
ROBERT S. JONES
R.S. JONES & ASSOCIATES, INC.
201 WEST CLAY STREET
MEBANE, NC 27302
PHONE: (919) 563-3623
FAX: (919) 563-0086
BOBBY@RSJONESANDASSOCIATES.COM

INDEX OF DRAWINGS:

C1.0 COVER SHEET
C2.0 EXIST. COND. / DEMOLITION
C3.0 SITE PLAN
C4.0 GRADING & STORM DRAINAGE
C5.0 EROSION CONTROL
C6.0 UTILITY PLAN
C8.0 LANDSCAPE & LIGHTING

P1.0 ROAD "A" PLAN & PROFILE
P2.0 ROAD "B" PLAN & PROFILE
P3.0 SHAKORI TRAIL PLAN & PROFILE

D1.0 EROSION CONTROL DETAILS
D1.1 EROSION CONTROL DETAILS
D2.0 STORMWATER DETAILS
D4.0 SITE DETAILS
A1-4 ARCHITECT GAZEBO PLANS

OWNERS:
HUMPHRIES FAMILY, LLC
4712 WHITFIELD ROAD
DURHAM, NC 27707
&
HENDERSON WOODS, INC.
6315 HOWIE MINE CHURCH RD
WAXHAW, NC 28173

DEVELOPER / OWNERS AGENT:
TOM HEFFNER
HEFFNER PROPERTIES, INC.
1020 NEW HOPE ROAD
CHAPEL HILL, NC 27516
OFFICE: (919) 929-0518
MOBILE: (919) 880-6279
TOM@CHAPELHILLNC.COM

ENGINEER:
CHARLES P. KOCH P.E.
EARTHCENTRIC ENGINEERING, INC.
204 WEST CLAY STREET
MEBANE, NC 27302
PHONE: (919) 563-9041
FAX: (919) 304-3234
PHIL.KOCH@EARTHCENTRIC.COM

CALL BEFORE YOU DIG... IT'S THE LAW.
CALL N.C. ONE-CALL(1-800-632-4949)
FOR LOCATION OF UNDERGROUND UTILITIES AT LEAST
2 WORKING DAYS PRIOR TO BEGINNING GRADING OR TRENCHING.
NORTH CAROLINA GENERAL STATUTE 87-102

APPROVAL STAMP

EarthCentric Engineering, Inc.
Licence # C-2638
204 W. Clay Street
Mebane, NC 27302
Phone: (919) 563-9041
Fax: (919) 304-3234
E-Mail: Phil.Koch@EarthCentric.com

ECE Incorporated

PRINCIPAL ENGINEER
PHIL KOCH - NCPE #22634

HENDERSON WOODS
ORANGE COUNTY, NORTH CAROLINA
COVER SHEET

| REV. | DATE | DESCRIPTION | BY |
|---|---|---|---|
| 1 | 09/09/2015 | ORANGE CO. COMMENTS | TMM |
| 2 | 09/16/2015 | SOLID WASTE COMMENTS | SCS |
| 3 | 11/18/2015 | WETLANDS DELINEATION | TMM |

| | |
|---|---|
| DATE: | JULY 2, 2015 |
| HORIZONTAL SCALE: | 1"=100' |
| VERTICAL SCALE: | N/A |
| PROJECT MANAGER: | CPK |
| DRAWN BY: | TMM |
| PROJECT NO: | 14-044 |
| DRAWING NAME: | 14-044 COUNCIL |

THIS DRAWING AND THE DESIGN HEREON ARE THE PROPERTY OF EarthCentric Engineering, Inc. THE INFORMATION ON THIS DRAWING IS NOT FOR USE ON ANY OTHER SITE OR PROJECT. THE REPRODUCTION OR OTHER USE OF THIS DRAWING IN WHOLE OR IN PART, WITHOUT WRITTEN CONSENT OF EarthCentric Engineering, Inc., IS PROHIBITED.

COPYRIGHT 2015 EarthCentric Engineering, Inc.

SHEET NO.
C1.0

MAJOR SUBDIVISON PLAN

PIN# 9891-80-0703 & 9891-60-4884

BOUNDARY SURVEY AND SELECT TOPOGRAPHY BY R.S. JONES AND ASSOCIATES. WETLANDS DETERMINATION BY S & EC, POSITION BASED ON GIS DATA. STREAM DETERMINATION BY ORANGE COUNTY, POSITION BASED ON GIS DATA. REMAINING TOPOGRAPHY & TREE COVERAGE VIA ORANGE COUNTY AND NCDOT GIS.

CALL BEFORE YOU DIG... IT'S THE LAW.

CALL N.C. ONE-CALL(1-800-632-4949)
FOR LOCATION OF UNDERGROUND UTILITIES AT LEAST
2 WORKING DAYS PRIOR TO BEGINNING GRADING OR TRENCHING.
NORTH CAROLINA GENERAL STATUTE 87-102

| LINE TABLE | | |
|---|---|---|
| LINE | BEARING | DISTANCE |
| L1 | S48°49'02"E | 177.34' |
| L2 | S60°54'43"E | 107.84' |
| L3 | S21°59'21"E | 106.34' |
| L4 | S26°47'44"E | 152.84' |
| L5 | S25°07'59"E | 161.50' |
| L6 | S25°14'47"E | 146.94' |
| L7 | S46°06'59"E | 287.76' |

| CURVE TABLE | | | | | |
|---|---|---|---|---|---|
| CURVE | RADIUS | ARC LENGTH | CHORD LENGTH | CHORD BEARING | DELTA ANGLE |
| C1 | 1141.41' | 396.71' | 394.71' | S81°55'30"E | 19°54'49" |
| C2 | 1136.33' | 387.46' | 385.59' | N82°26'39"W | 19°32'12" |

NOTE ON TOPOGRAPHY:

SURVEYED GROUND COMPRISES A CORRIDOR APPROXIMATELY 100' WIDE FOLLOWING THE PROPOSED ROADWAY CENTERLINES. THIS AREA IS REPRESENTED BY THE SMALL DASHED LINES AND A 1' CONTOUR INTERVAL. THE TOPOGRAPHY OUTSIDE THIS AREA IS TAKEN FROM GIS DATA (NCDOT LIDAR) AND IS REPRESENTED WITH LARGER DASHED LINES, AND A 2' CONTOUR INTERVAL. NOTE THAT THE TWO DATA SETS DO NOT PERFECTLY MATCH ELEVATIONS AT THE EDGES, BUT ARE GENERALLY CONSISTENT IN CHARACTER AND ARE WITHIN TYPICAL TOLERANCES FOR THE USE OF GIS DATA.

EarthCentric Engineering, Inc.
Licence # C-2638
204 W. Clay Street
Mebane, NC 27302
Phone: (919) 563-9041
Fax: (919) 304-3234
E-Mail: Phil.Koch@EarthCentric.com

PRINCIPAL ENGINEER
PHIL KOCH - NCPE #22634

# HENDERSON WOODS
ORANGE COUNTY, NORTH CAROLINA

## EXISTING CONDITIONS & DEMOLITION PLAN

| REV. | DATE | DESCRIPTION | BY |
|---|---|---|---|
| 1 | 09/09/2015 | ORANGE CO. COMMENTS | TMM |
| 2 | 09/16/2015 | SOLID WASTE COMMENTS | SCS |
| 3 | 11/18/2015 | WETLANDS DELINEATION | TMM |

| | |
|---|---|
| DATE: | JULY 2, 2015 |
| HORIZONTAL SCALE: | 1"=100' |
| VERTICAL SCALE: | N/A |
| PROJECT MANAGER: | CPK |
| DRAWN BY: | TMM |
| PROJECT NO: | 14-044 |
| DRAWING NAME: | 14-044 COUNCIL |

THIS DRAWING AND THE DESIGN HEREON ARE THE PROPERTY OF EarthCentric Engineering, Inc. THE INFORMATION ON THIS DRAWING IS NOT FOR USE ON ANY OTHER SITE OR PROJECT. THE REPRODUCTION OR OTHER USE OF THIS DRAWING IN WHOLE OR IN PART, WITHOUT WRITTEN CONSENT OF EarthCentric Engineering, Inc., IS PROHIBITED.

COPYRIGHT 2015 EarthCentric Engineering, Inc.

SHEET NO.

C2.0

MAJOR SUBDIVISON PLAN

PIN# 9891-80-0703 & 9891-60-4884

PROJECT DATA

SITE INFORMATION:

| | |
|---|---|
| OWNER PARCEL 1: | HUMPHRIES FAMILY, LLC |
| PIN NUMBER PARCEL 1: | 9891-60-4884 |
| DEED REF PARCEL 1: | BOOK 2027, PAGE 561 |
| ACREAGE PARCEL 1: | 36.11 ACRES BY SURVEY |
| OWNER PARCEL 2: | HENDERSON WOODS, INC. |
| PIN NUMBER PARCEL 2: | 9891-80-0703 |
| DEED REF PARCEL 2: | BOOK 5892, PAGE 471 |
| ACREAGE PARCEL 2: | 11.84 ACRES BY SURVEY |
| SITE TOTAL: | 47.95 ACRES |
| ZONING: | RB – RURAL BUFFER |
| WATERSHED: | JORDAN LAKE UNPROTECTED OVERLAY |
| TOWNSHIP: | 7 |
| SCHOOL DISTRICT: | CHAPEL HILL – CARRBORO |
| FIRE DISTRICT: | NEW HOPE |

PROPOSED SITE DATA:

| | |
|---|---|
| NUMBER OF LOTS: | 19 WELL & SEPTIC LOTS |
| AVERAGE LOT SIZE: | 1.23 ACRES |
| MIN. LOT SIZE: | 1.00 ACRES |
| OVERALL DENSITY: | 19 LOTS / 47.95 ACRES<br>1 UNIT PER 2.52 ACRES |
| LINEAR FEET OF NEW ROADS: | 2,120 LF |
| ACRES IN OPEN SPACE: | 21.73 ACRES |
| SLOPES >15% DISTURBED: | ~6,000 SF |
| FRONT SETBACKS: | 30' |
| SIDE & REAR SETBACKS: | 15' |
| LAND USE BUFFER: | N/A BUT 100' BUFFER PROVIDED ALONG PERIMETER OF SITE (EXISTING VEGETATION TO REMAIN) |

PROPOSED ROADWAY DATA:

ROAD "A"
- 0.45 ACRES RIGHT-OF-WAY
- 441 LINEAR FEET OF CENTER LINE
- 10,969 SF IMPERVIOUS AREA

ROAD "B"
- 1.39 ACRES RIGHT-OF-WAY
- 1,125 LINEAR FEET OF CENTER LINE
- 34,475 SF IMPERVIOUS AREA

SHAKORI TRAIL (NEWLY CONSTRUCTED PORTION)
- 1.05 ACRES IN RIGHT-OF-WAY
- 554 LINEAR FEET OF CENTER LINE
- 21,242 SF IMPERVIOUS AREA

ACCESS EASEMENT (FORMER SHAKORI TRAIL, PARTIAL OVERLAP WITH NEW PUBLIC RIGHT-OF-WAY)
- 1227 LINEAR FEET @ CENTER LINE

OPEN SPACE CALCULATIONS:

PER SECTION 7.13.3 (C) (1) AND (2) OF THE ORANGE COUNTY UNIFIED DEVELOPMENT ORDINANCE (UDO) OPEN SPACE FOR THE PROJECT IS BROKEN DOWN AS FOLLOWS:

PRIMARY:
- WETLANDS INCLUDING BUT NOT LIMITED TO STREAMS, CREEKS, PONDS, RESERVOIRS ETC: 4.02 ACRES OF OPEN SPACE OF STREAM BUFFER AROUND EXISTING STREAMS.

SECONDARY:
- PERIMETER BUFFER – 100 FOOT NATURAL BUFFER AROUND THE PERIMETER OF THE PROJECT: 12.61 ACRES
- WOODLANDS – PRESERVATION OF EXISTING FORESTED AREA AS OPEN SPACE: 4.88 ACRES ADDITIONAL OPEN SPACE ADJACENT TO 100' PERIMETER BUFFER AND OUTSIDE PROPOSED LOTS.

TOTAL: 21.51 ACRES OR 44.9%

IMPERVIOUS SURFACE CALCULATIONS:

| | |
|---|---|
| IMPERVIOUS AREA FOR ROAD "A" = | 0.25 ACRES (10,969 SF) |
| IMPERVIOUS AREA FOR ROAD "B" = | 0.79 ACRES (34,475 SF) |
| IMP. AREA FOR NEW SHAKORI TRAIL = | 0.49 ACRES (21,242 SF) |
| IMP. AREA, REMAINDER PRIVATE DRIVE = | 0.15 ACRES (6,383 SF) |
| TOTAL R/W IMPERVIOUS AREA = | 1.68 ACRES (73,069 SF) |
| PER LOT IMPERVIOUS AREA | |
| BUILDING FOOTPRINT = | 3,600 SF |
| DRIVEWAY = | 1,000 SF |
| PATIOS & SIDEWALKS = | 400 SF |
| TOTAL IMPERVIOUS ON EACH LOT = | 5,000 SF |
| X 19 LOTS = TOTAL IMPERVIOUS ON LOTS | 2.18 ACRES (95,000 SF) |
| TOTAL R/W IMPERVIOUS = | 1.68 ACRES (73,069 SF) |
| TOTAL STREET SIDEWALK = | 0.44 ACRES (19,297 SF) |
| TOTAL LOT IMPERVIOUS = | 2.18 ACRES (95,000 SF) |
| TOTAL PROPOSED PROJECT IMP. = | 4.30 ACRES (187,336 SF) |

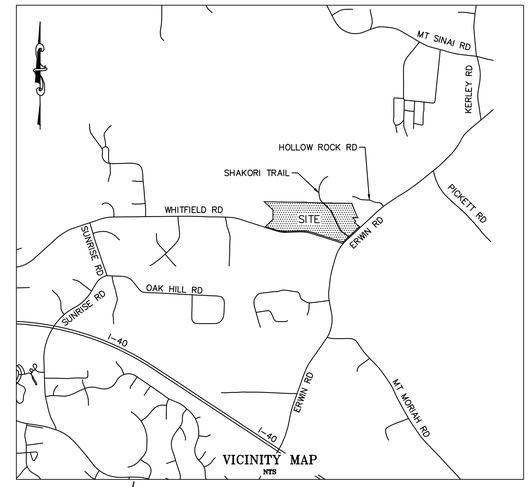


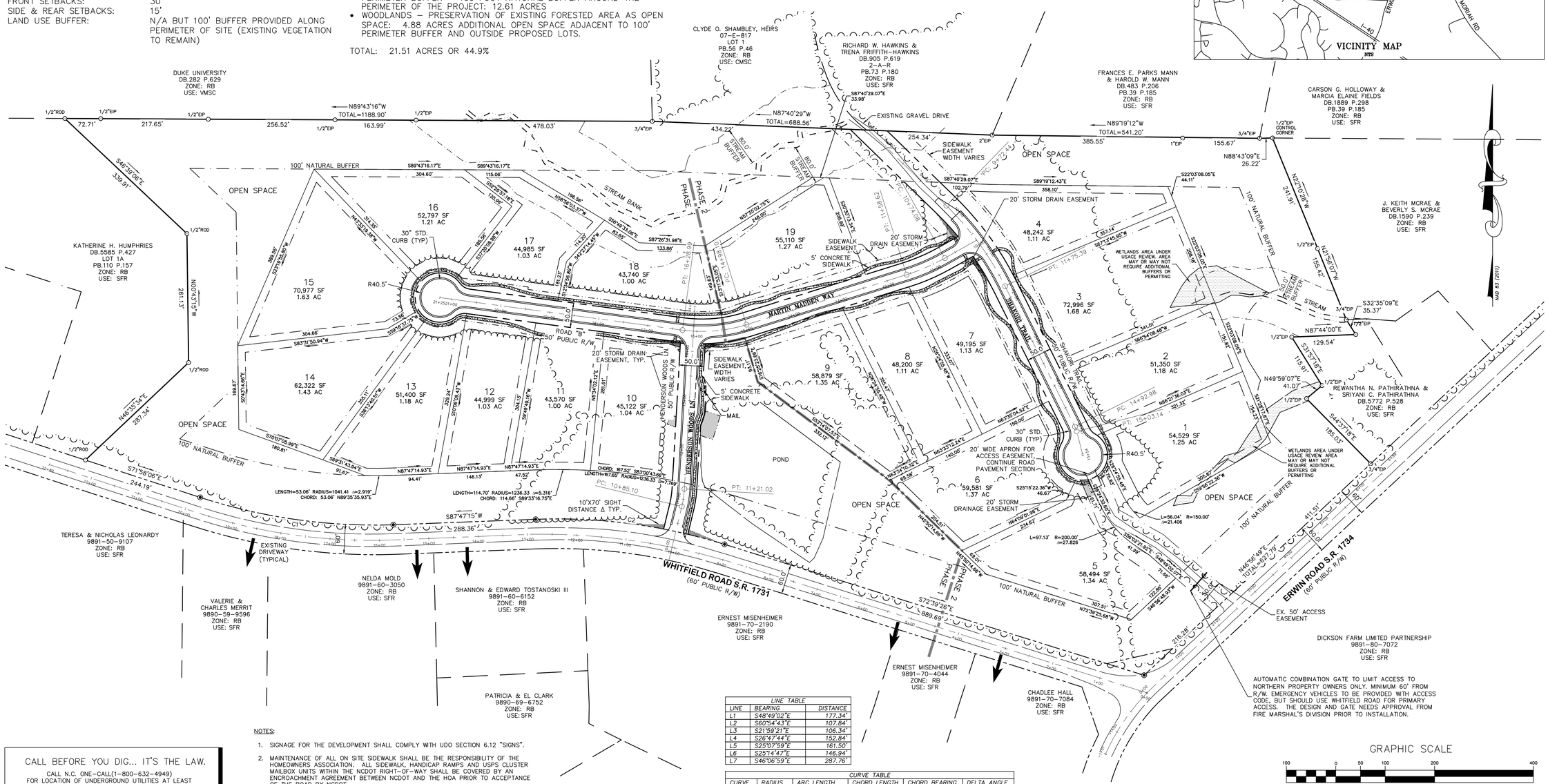


| LINE TABLE | | |
|---|---|---|
| LINE | BEARING | DISTANCE |
| L1 | S48°49'02"E | 177.34' |
| L2 | S60°54'43"E | 107.84' |
| L3 | S21°59'21"E | 106.34' |
| L4 | S26°47'44"E | 152.84' |
| L5 | S25°07'59"E | 161.50' |
| L6 | S25°14'47"E | 146.94' |
| L7 | S46°06'59"E | 287.76' |

| CURVE TABLE | | | | | |
|---|---|---|---|---|---|
| CURVE | RADIUS | ARC LENGTH | CHORD LENGTH | CHORD BEARING | DELTA ANGLE |
| C1 | 1141.41' | 396.71' | 394.71' | S81°55'30"E | 19°54'49" |
| C2 | 1136.33' | 387.46' | 385.59' | N82°26'39"W | 19°32'12" |

NOTES:

1. SIGNAGE FOR THE DEVELOPMENT SHALL COMPLY WITH UDO SECTION 6.12 "SIGNS".
2. MAINTENANCE OF ALL ON SITE SIDEWALK SHALL BE THE RESPONSIBILITY OF THE HOMEOWNERS ASSOCIATION. ALL SIDEWALK, HANDICAP RAMPS AND USPS CLUSTER MAILBOX UNITS WITHIN THE NCDOT RIGHT-OF-WAY SHALL BE COVERED BY AN ENCROACHMENT AGREEMENT BETWEEN NCDOT AND THE HOA PRIOR TO ACCEPTANCE OF THE ROAD BY NCDOT.

CALL BEFORE YOU DIG... IT'S THE LAW.

CALL N.C. ONE-CALL(1-800-632-4949)
FOR LOCATION OF UNDERGROUND UTILITIES AT LEAST
2 WORKING DAYS PRIOR TO BEGINNING GRADING OR TRENCHING.
NORTH CAROLINA GENERAL STATUTE 87-102

GRAPHIC SCALE

100 0 50 100 200 400

( IN FEET )
1 inch = 100 ft.

EarthCentric Engineering, Inc.
Licence # C-2638
204 W. Clay Street
Mebane, NC 27302
Phone: (919) 563-9041
Fax: (919) 304-3234
E-Mail: Phil.Koch@EarthCentric.com

ECE Incorporated

PRINCIPAL ENGINEER
PHIL KOCH - NCPE #22634

# HENDERSON WOODS
ORANGE COUNTY, NORTH CAROLINA

SITE PLAN

| REV. | DATE | DESCRIPTION | BY |
|---|---|---|---|
| 1 | 09/09/2015 | ORANGE CO. COMMENTS | TMM |
| 2 | 09/16/2015 | SOLID WASTE COMMENTS | SCS |
| 3 | 11/18/2015 | WETLANDS DELINEATION | TMM |

| | |
|---|---|
| DATE: | JULY 2, 2015 |
| HORIZONTAL SCALE: | 1"=100' |
| VERTICAL SCALE: | N/A |
| PROJECT MANAGER: | CPK |
| DRAWN BY: | TMM |
| PROJECT NO: | 14-044 |
| DRAWING NAME: | 14-044 COUNCIL |

THIS DRAWING AND THE DESIGN HEREON ARE THE PROPERTY OF EarthCentric Engineering, Inc. THE INFORMATION ON THIS DRAWING IS NOT FOR USE ON ANY OTHER SITE OR PROJECT. THE REPRODUCTION OR OTHER USE OF THIS DRAWING IN WHOLE OR IN PART, WITHOUT WRITTEN CONSENT OF EarthCentric Engineering, Inc., IS PROHIBITED.

COPYRIGHT 2015 EarthCentric Engineering, Inc.

SHEET NO.

C3.0

MAJOR SUBDIVISON PLAN

PIN# 9891-80-0703 & 9891-60-4884

## GRADING & STORM DRAINAGE NOTES:

1. ALL CONSTRUCTION SHALL BE IN ACCORDANCE WITH THE LOCAL CONSTRUCTION STANDARDS, SPECIFICATIONS, AND PROCEDURES AND THE NCDENR'S SEDIMENTATION AND EROSION CONTROL STANDARDS, SPECS., AND PROCEDURES.
2. CONTRACTOR SHALL VERIFY THAT ALL APPLICABLE STATE AND LOCAL PERMITS REQUIRED FOR THE COMMENCEMENT OF GRADING OPERATIONS HAVE BEEN OBTAINED PRIOR TO START OF GRADING.
3. CONTRACTOR SHALL BE RESPONSIBLE FOR FIELD VERIFICATION OF ALL EXISTING UTILITIES PRIOR TO THE BEGINNING OF DEMOLITION AND/OR CONSTRUCTION.
4. CONTRACTOR SHALL BE RESPONSIBLE FOR PROTECTING ALL EXISTING UTILITIES TO REMAIN DURING ALL CONSTRUCTION ACTIVITIES.
5. ALL STORMWATER MANAGEMENT FACILITIES SHALL BE DESIGNED AND CONSTRUCTED TO MEET ALL STATE AND LOCAL REQUIREMENTS, INCLUDING THE STATE STANDARDS FOR WATER QUALITY AND DETENTION FACILITIES (CURRENT EDITION).
6. EROSION CONTROL MEASURES SHALL BE PROVIDED ACCORDING TO THE EROSION CONTROL PLAN AND AS NEEDED TO PROTECT ADJACENT PROPERTIES.
7. CONTRACTOR SHALL PROVIDE ALL STAKING, FLAGGING AND/OR FENCING NECESSARY TO PROVIDE PROPER PROTECTION OF THE STREAM BUFFER.

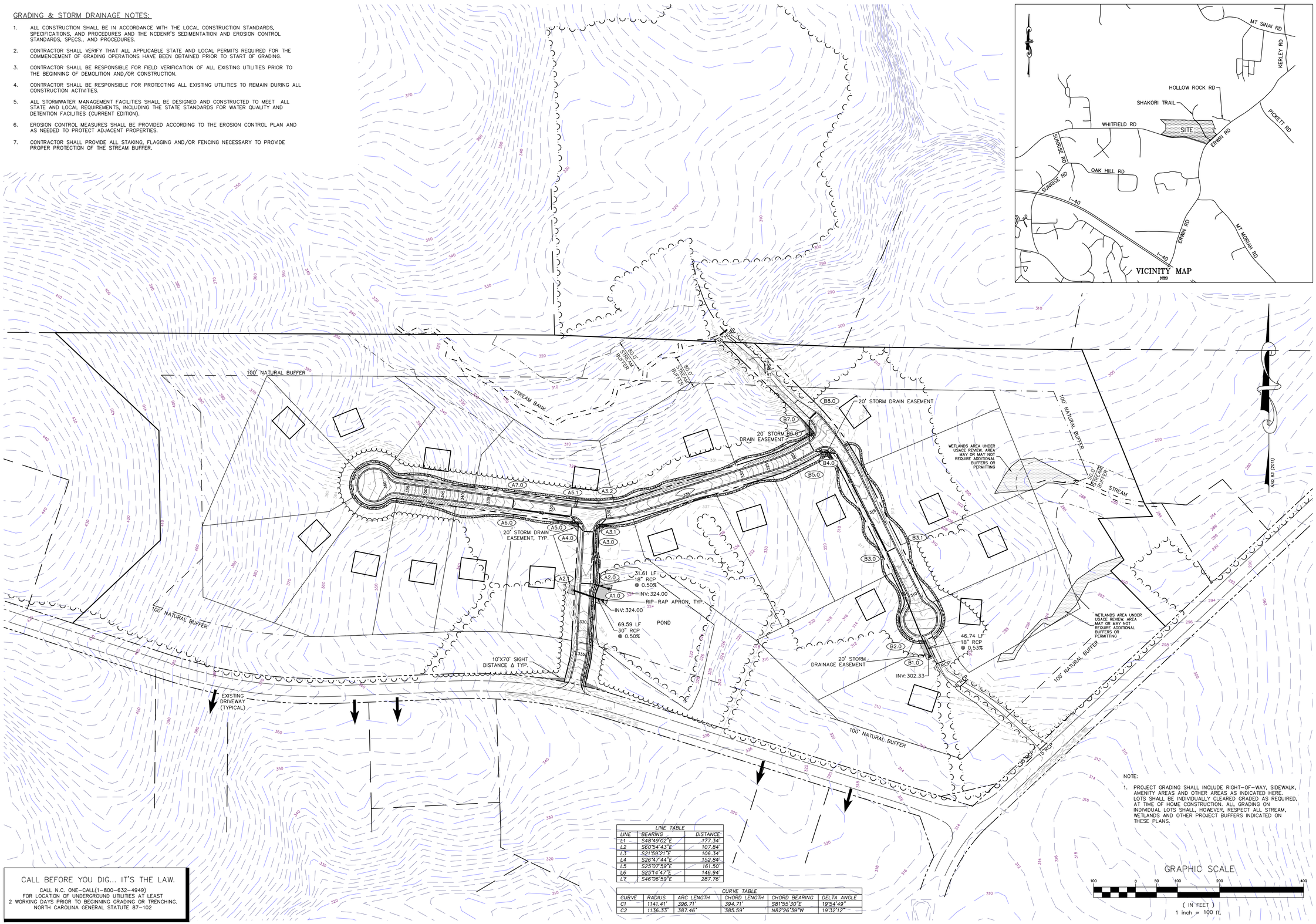


| LINE TABLE | | |
|---|---|---|
| LINE | BEARING | DISTANCE |
| L1 | S48°49'02"E | 177.34' |
| L2 | S60°54'43"E | 107.84' |
| L3 | S21°59'21"E | 106.34' |
| L4 | S26°47'44"E | 152.84' |
| L5 | S25°07'59"E | 161.50' |
| L6 | S25°14'47"E | 146.94' |
| L7 | S46°06'59"E | 287.76' |

| CURVE TABLE | | | | | |
|---|---|---|---|---|---|
| CURVE | RADIUS | ARC LENGTH | CHORD LENGTH | CHORD BEARING | DELTA ANGLE |
| C1 | 1141.41' | 396.71' | 394.71' | S81°55'30"E | 19°54'49" |
| C2 | 1136.33' | 387.46' | 385.59' | N82°26'39"W | 19°32'12" |

NOTE:

1. PROJECT GRADING SHALL INCLUDE RIGHT-OF-WAY, SIDEWALK, AMENITY AREAS AND OTHER AREAS AS INDICATED HERE. LOTS SHALL BE INDIVIDUALLY CLEARED GRADED AS REQUIRED, AT TIME OF HOME CONSTRUCTION. ALL GRADING ON INDIVIDUAL LOTS SHALL, HOWEVER, RESPECT ALL STREAM, WETLANDS AND OTHER PROJECT BUFFERS INDICATED ON THESE PLANS.

CALL BEFORE YOU DIG... IT'S THE LAW.

CALL N.C. ONE-CALL(1-800-632-4949)
FOR LOCATION OF UNDERGROUND UTILITIES AT LEAST
2 WORKING DAYS PRIOR TO BEGINNING GRADING OR TRENCHING.
NORTH CAROLINA GENERAL STATUTE 87-102


EarthCentric Engineering, Inc.
Licence # C-2638
204 W. Clay Street
Mebane, NC 27302
Phone: (919) 563-9041
Fax: (919) 304-3234
E-Mail: Phil.Koch@EarthCentric.com

PRINCIPAL ENGINEER
PHIL KOCH - NCPE #22634


# HENDERSON WOODS
ORANGE COUNTY, NORTH CAROLINA

## GRADING & STORM DRAINAGE PLAN

| REV | DATE | DESCRIPTION | BY |
|---|---|---|---|
| 1 | 09/09/2015 | ORANGE CO. COMMENTS | TMM |
| 2 | 09/16/2015 | SOLID WASTE COMMENTS | SCS |
| 3 | 11/18/2015 | WETLANDS DELINEATION | TMM |

| | |
|---|---|
| DATE: | JULY 2, 2015 |
| HORIZONTAL SCALE: | 1"=100' |
| VERTICAL SCALE: | N/A |
| PROJECT MANAGER: | CPK |
| DRAWN BY: | TMM |
| PROJECT NO: | 14-044 |
| DRAWING NAME: | 14-044 COUNCIL |


THIS DRAWING AND THE DESIGN HEREON ARE THE PROPERTY OF EarthCentric Engineering, Inc. THE INFORMATION ON THIS DRAWING IS NOT FOR USE ON ANY OTHER SITE OR PROJECT. THE REPRODUCTION OR OTHER USE OF THIS DRAWING IN WHOLE OR IN PART, WITHOUT WRITTEN CONSENT OF EarthCentric Engineering, Inc., IS PROHIBITED.

COPYRIGHT 2015 EarthCentric Engineering, Inc.


SHEET NO.

C4.0

MAJOR SUBDIVISON PLAN

PIN# 9891-80-0703 & 9891-60-4884

## GRADING & STORM DRAINAGE NOTES:

1. ALL CONSTRUCTION SHALL BE IN ACCORDANCE WITH THE LOCAL CONSTRUCTION STANDARDS, SPECIFICATIONS, AND PROCEDURES AND THE NCDENR'S SEDIMENTATION AND EROSION CONTROL STANDARDS, SPECS., AND PROCEDURES.
2. CONTRACTOR SHALL VERIFY THAT ALL APPLICABLE STATE AND LOCAL PERMITS REQUIRED FOR THE COMMENCEMENT OF GRADING OPERATIONS HAVE BEEN OBTAINED PRIOR TO START OF GRADING.
3. CONTRACTOR SHALL BE RESPONSIBLE FOR FIELD VERIFICATION OF ALL EXISTING UTILITIES PRIOR TO THE BEGINNING OF DEMOLITION AND/OR CONSTRUCTION.
4. CONTRACTOR SHALL BE RESPONSIBLE FOR PROTECTING ALL EXISTING UTILITIES TO REMAIN DURING ALL CONSTRUCTION ACTIVITIES.
5. ALL STORMWATER MANAGEMENT FACILITIES SHALL BE DESIGNED AND CONSTRUCTED TO MEET ALL STATE AND LOCAL REQUIREMENTS, INCLUDING THE STATE STANDARDS FOR WATER QUALITY AND DETENTION FACILITIES (CURRENT EDITION).
6. EROSION CONTROL MEASURES SHALL BE PROVIDED ACCORDING TO THE EROSION CONTROL PLAN AND AS NEEDED TO PROTECT ADJACENT PROPERTIES.
7. CONTRACTOR SHALL PROVIDE ALL STAKING, FLAGGING AND/OR FENCING NECESSARY TO PROVIDE PROPER PROTECTION OF THE STREAM BUFFER.

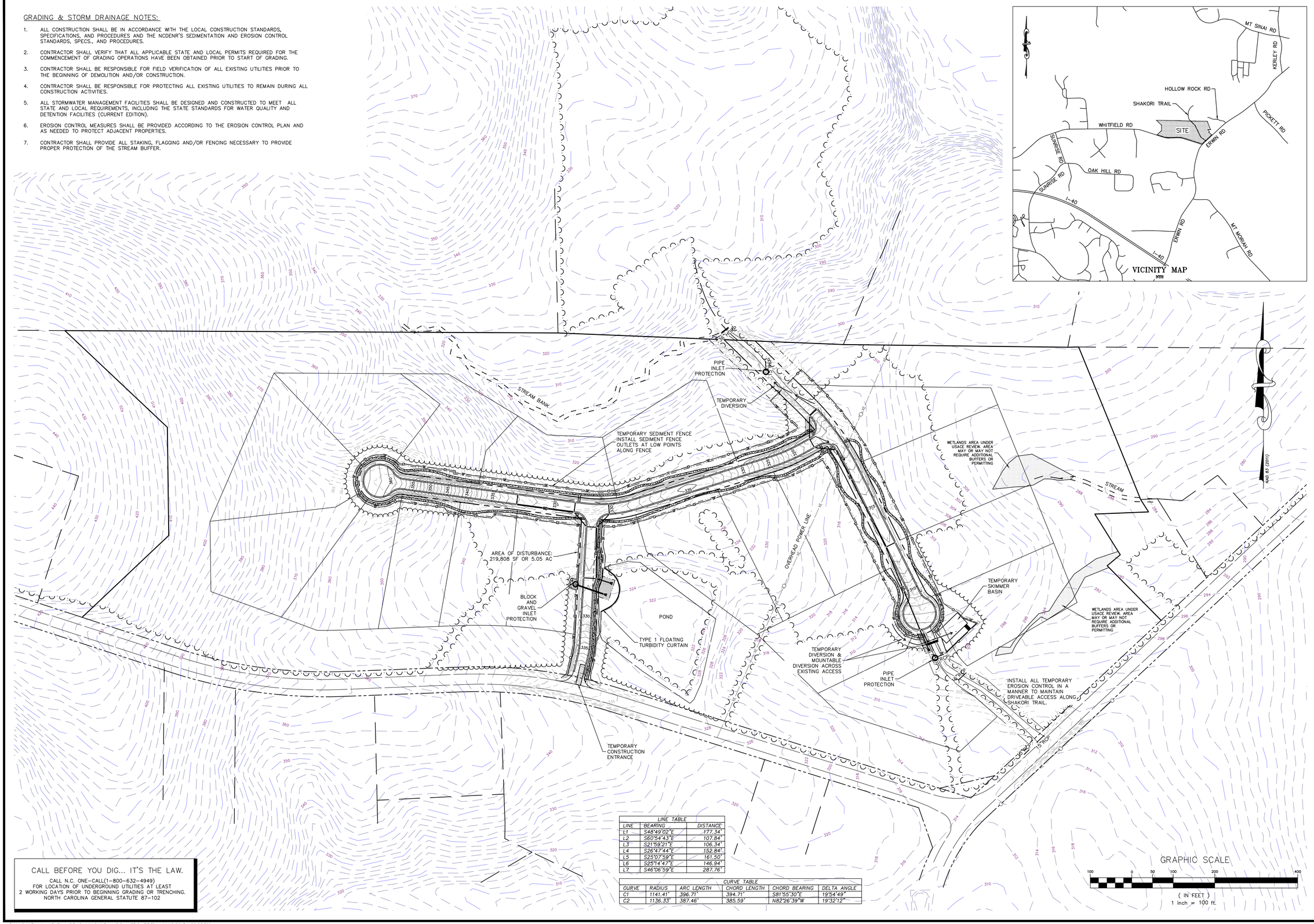


| LINE TABLE | | |
|---|---|---|
| LINE | BEARING | DISTANCE |
| L1 | S48°49'02"E | 177.34' |
| L2 | S60°54'43"E | 107.84' |
| L3 | S21°59'21"E | 106.34' |
| L4 | S26°47'44"E | 152.84' |
| L5 | S25°07'59"E | 161.50' |
| L6 | S25°14'47"E | 146.94' |
| L7 | S46°06'59"E | 287.76' |

| CURVE TABLE | | | | | |
|---|---|---|---|---|---|
| CURVE | RADIUS | ARC LENGTH | CHORD LENGTH | CHORD BEARING | DELTA ANGLE |
| C1 | 1141.41' | 396.71' | 394.71' | S81°55'30"E | 19°54'49" |
| C2 | 1136.33' | 387.46' | 385.59' | N82°26'39"W | 19°32'12" |

CALL BEFORE YOU DIG... IT'S THE LAW.

CALL N.C. ONE-CALL(1-800-632-4949)
FOR LOCATION OF UNDERGROUND UTILITIES AT LEAST
2 WORKING DAYS PRIOR TO BEGINNING GRADING OR TRENCHING.
NORTH CAROLINA GENERAL STATUTE 87-102

EarthCentric Engineering, Inc.
Licence # C-2638
204 W. Clay Street
Mebane, NC 27302
Phone: (919) 563-9041
Fax: (919) 304-3234
E-Mail: Phil.Koch@EarthCentric.com

ECE Incorporated

PRINCIPAL ENGINEER
PHIL KOCH - NCPE #22634

# HENDERSON WOODS
ORANGE COUNTY, NORTH CAROLINA

## EROSION & SEDIMENT CONTROL PLAN

| REV. | DATE | DESCRIPTION | BY |
|---|---|---|---|
| 1 | 09/09/2015 | ORANGE CO. COMMENTS | TMM |
| 2 | 09/16/2015 | SOLID WASTE COMMENTS | SCS |
| 3 | 11/18/2015 | WETLANDS DELINEATION | TMM |

| | |
|---|---|
| DATE: | JULY 2, 2015 |
| HORIZONTAL SCALE: | 1"=100' |
| VERTICAL SCALE: | N/A |
| PROJECT MANAGER: | CPK |
| DRAWN BY: | TMM |
| PROJECT NO: | 14-044 |
| DRAWING NAME: | 14-044 COUNCIL |

THIS DRAWING AND THE DESIGN HEREON ARE THE PROPERTY OF EarthCentric Engineering, Inc. THE INFORMATION ON THIS DRAWING IS NOT FOR USE ON ANY OTHER SITE OR PROJECT. THE REPRODUCTION OR OTHER USE OF THIS DRAWING IN WHOLE OR IN PART, WITHOUT WRITTEN CONSENT OF EarthCentric Engineering, Inc., IS PROHIBITED.

COPYRIGHT 2015 EarthCentric Engineering, Inc.

SHEET NO.

C5.0

MAJOR SUBDIVISON PLAN

PIN# 9891-80-0703 & 9891-60-4884

SOILS AND UTILITY NOTES:

1. SOILS SURVEY BY S&EC AND LOCATED ON GIS DATA
2. SEPTIC FIELD PERK TESTS AND LOCATES BY ORANGE COUNTY HEALTH DEPARTMENT, LOCATED ON GIS DATA.
3. PRELIMINARY SEPTIC FIELDS ARE SHOWN IN RELATION TO LOT LINES AND POTENTIAL BUILDING LOCATIONS TO DEMONSTRATE THE BASIC VIABILITY OF THE LOT ARRANGEMENT AT THE CURRENT SITE PLAN STAGE.
4. THE APPLICANT UNDERSTANDS THAT PRIOR TO FINAL APPROVAL, ALL LOTS MUST HAVE ADEQUATE SEPTIC FIELDS IDENTIFIED THAT COMPLY WITH ALL SIZE, FLOW, SETBACK AND OTHER ORANGE COUNTY HEALTH DEPARTMENT REGULATIONS.
5. FINAL LOCATIONS AND DIMENSIONS OF SEPTIC FIELDS TO BE DETERMINED BY R.S. JONES & ASSOC. SURVEYORS FROM HEALTH DEPARTMENT FLAGS.
6. LOCATIONS OF WELL SITES INCLUDING SUFFICIENT SETBACKS FROM SEPTIC FIELDS AND OTHER OBSTACLES IS CURRENTLY UNDER EVALUATION BY S&EC WITH ASSISTANCE FROM R.S. JONES & ASSOCIATES SURVEYORS.
7. THE APPLICANT UNDERSTANDS THAT PRIOR TO FINAL APPROVAL, ALL LOTS MUST HAVE ADEQUATE WELL WATER AVAILABILITY DEMONSTRATED TO THE ORANGE COUNTY HEALTH DEPARTMENT.
8. CURRENT WELL LOCATIONS ARE CONCEPTUAL AND ARE DISPLAYED IN ORDER TO DEMONSTRATE THAT SUFFICIENT WELL LOCATIONS ARE AVAILABLE. ANY LOTS WITH REMOTE WELL LOCATIONS WILL SHOW EASEMENTS SUFFICIENT FOR WATER PIPE AND ELECTRICAL MAINTENANCE PURPOSES.
9. RESIDENCE LOCATIONS AND SIZES (CURRENTLY 50' X 60') ARE CONCEPTUAL AND SUBJECT TO CHANGE DUE TO SURVEYED SEPTIC FIELD AND WELL LOCATION SETBACKS.

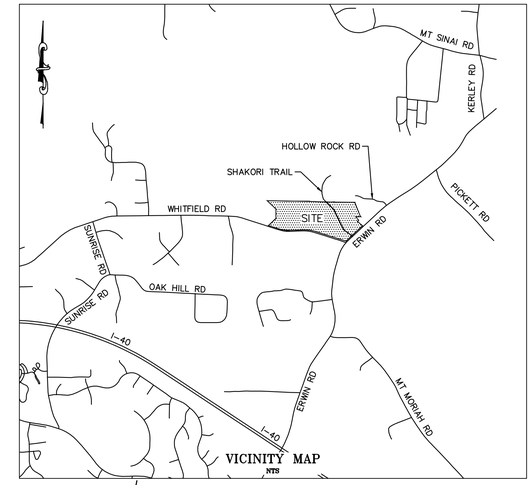


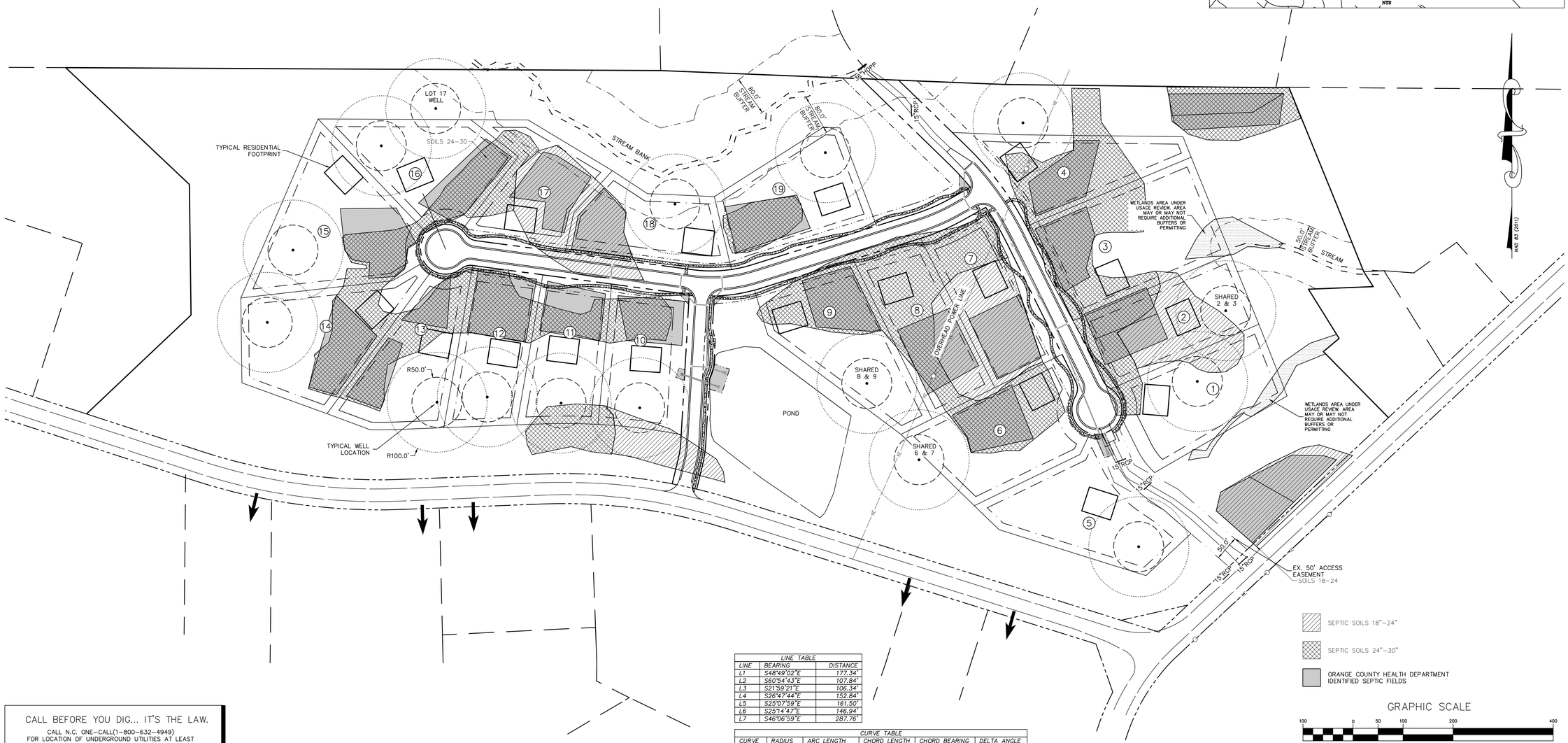


| LINE TABLE | | |
|---|---|---|
| LINE | BEARING | DISTANCE |
| L1 | S48°49'02"E | 177.34' |
| L2 | S60°54'43"E | 107.84' |
| L3 | S21°59'21"E | 106.34' |
| L4 | S26°47'44"E | 152.84' |
| L5 | S25°07'59"E | 161.50' |
| L6 | S25°14'47"E | 146.94' |
| L7 | S46°06'59"E | 287.76' |

| CURVE TABLE | | | | | |
|---|---|---|---|---|---|
| CURVE | RADIUS | ARC LENGTH | CHORD LENGTH | CHORD BEARING | DELTA ANGLE |
| C1 | 1141.41' | 396.71' | 394.71' | S81°55'30"E | 19°54'49" |
| C2 | 1136.33' | 387.46' | 385.59' | N82°26'39"W | 19°32'12" |

CALL BEFORE YOU DIG... IT'S THE LAW.

CALL N.C. ONE-CALL(1-800-632-4949)
FOR LOCATION OF UNDERGROUND UTILITIES AT LEAST
2 WORKING DAYS PRIOR TO BEGINNING GRADING OR TRENCHING.
NORTH CAROLINA GENERAL STATUTE 87-102

EarthCentric Engineering, Inc.
Licence # C-2638

204 W. Clay Street
Mebane, NC 27302
Phone: (919) 563-9041
Fax: (919) 304-3234
E-Mail: Phil.Koch@EarthCentric.com

PRINCIPAL ENGINEER
PHIL KOCH - NCPE #22634

# HENDERSON WOODS
## ORANGE COUNTY, NORTH CAROLINA
## UTILITY PLAN

| REV | DATE | DESCRIPTION | BY |
|---|---|---|---|
| 1 | 09/09/2015 | ORANGE CO. COMMENTS | TMM |
| 2 | 09/16/2015 | SOLID WASTE COMMENTS | SCS |
| 3 | 11/18/2015 | WETLANDS DELINEATION | TMM |

| | |
|---|---|
| DATE: | JULY 2, 2015 |
| HORIZONTAL SCALE: | 1"=100' |
| VERTICAL SCALE: | N/A |
| PROJECT MANAGER: | CPK |
| DRAWN BY: | TMM |
| PROJECT NO: | 14-044 |
| DRAWING NAME: | 14-044 COUNCIL |

THIS DRAWING AND THE DESIGN HEREON ARE THE PROPERTY OF EarthCentric Engineering, Inc. THE INFORMATION ON THIS DRAWING IS NOT FOR USE ON ANY OTHER SITE OR PROJECT. THE REPRODUCTION OR OTHER USE OF THIS DRAWING IN WHOLE OR IN PART, WITHOUT WRITTEN CONSENT OF EarthCentric Engineering, Inc., IS PROHIBITED.

COPYRIGHT 2015 EarthCentric Engineering, Inc.

SHEET NO.

C6.0

MAJOR SUBDIVISON PLAN

PIN# 9891-80-0703 & 9891-60-4884

NOTES:

1. STREET TREES MUST CONSIST OF 6 DIFFERENT SPECIES OF TREES, MINIMUM, WITH MAX OF 30% BEING ONE SPECIES.
2. STREET LIGHTING TO BE PROVIDED BY DUKE ENERGY. FULL LIGHTING PLANS TO BE PROVIDED BY DUKE PRIOR TO CONSTRUCTION PER UDO SECTION 6.11.G.2.

PLANT LIST

| | | BOTANICAL NAME | COMMON NAME | TYPE | HEIGHT/CALIPER AT TIME OF PLANTING | TOTAL # |
|---|---|---|---|---|---|---|
| | SM | ACER RUBRUM 'FRANK'S RED' | RED SUNSET MAPLE | CT | 2.0" CALIPER | 12 |
| | LM | ACER SACCHARUM 'LEGACY' | LEGACY SUGAR MAPLE | CT | 2.0" CALIPER | 11 |
| | RO | QUERCUS RUBRA | RED OAK | CT | 2.0" CALIPER | 12 |
| | | | | | | |
| | TM | ACER BUEGERANUM | TRIDENT MAPLE | DU | 1.0" CAL. & 8' TALL | 12 |
| | ER | CERCIS CANADENSIS | EASTERN REDBUD | DU | 1.0" CAL. & 8' TALL | 12 |
| | CM | LAGERSTROEMIA INDICA | CRAPE MYRTLE | DU | 1.0" CAL. & 8' TALL | 11 |
| | | | | | | |
| | | TOTAL TREES | | | | 70 |
| | | | | | | |

GENERAL LANDSCAPING NOTES:

1) ALL PLANT MATERIAL MUST MEET OR EXCEED THE MINIMUM SIZES SHOWN AT THE TIME OF INSTALLATION.

2) MIN # TREE SPECIES REQ. = 6 (TOTAL TREES = 70 / BETWEEN 41 & 80) & MAX OF 30% (21) SAME SPECIES.

LINE TABLE

| LINE | BEARING | DISTANCE |
|---|---|---|
| L1 | S48°49'02"E | 177.34' |
| L2 | S60°54'43"E | 107.84' |
| L3 | S21°59'21"E | 106.34' |
| L4 | S26°47'44"E | 152.84' |
| L5 | S25°07'59"E | 161.50' |
| L6 | S25°14'47"E | 146.94' |
| L7 | S46°06'59"E | 287.76' |

CURVE TABLE

| CURVE | RADIUS | ARC LENGTH | CHORD LENGTH | CHORD BEARING | DELTA ANGLE |
|---|---|---|---|---|---|
| C1 | 1141.41' | 396.71' | 394.71' | S81°55'30"E | 19°54'49" |
| C2 | 1136.33' | 387.46' | 385.59' | N82°26'39"W | 19°32'12" |

CALL BEFORE YOU DIG... IT'S THE LAW.

CALL N.C. ONE-CALL(1-800-632-4949)
FOR LOCATION OF UNDERGROUND UTILITIES AT LEAST
2 WORKING DAYS PRIOR TO BEGINNING GRADING OR TRENCHING.
NORTH CAROLINA GENERAL STATUTE 87-102

GRAPHIC SCALE

100 0 50 100 200 400

( IN FEET )
1 inch = 100 ft.

EarthCentric Engineering, Inc.
Licence # C-2638
204 W. Clay Street
Mebane, NC 27302
Phone: (919) 563-9041
Fax: (919) 304-3234
E-Mail: Phil.Koch@EarthCentric.com

ECE Incorporated

PRINCIPAL ENGINEER
PHIL KOCH - NCPE #22634

# HENDERSON WOODS
ORANGE COUNTY, NORTH CAROLINA

## LANDSCAPE & LIGHTING PLAN

| REV. | DATE | DESCRIPTION | BY |
|---|---|---|---|
| 1 | 09/09/2015 | ORANGE CO. COMMENTS | TMM |
| 2 | 09/16/2015 | SOLID WASTE COMMENTS | SCS |
| 3 | 11/18/2015 | WETLANDS DELINEATION | TMM |

| | |
|---|---|
| DATE: | JULY 2, 2015 |
| HORIZONTAL SCALE: | 1"=100' |
| VERTICAL SCALE: | N/A |
| PROJECT MANAGER: | CPK |
| DRAWN BY: | TMM |
| PROJECT NO: | 14-044 |
| DRAWING NAME: | 14-044 COUNCIL |

THIS DRAWING AND THE DESIGN HEREON ARE THE PROPERTY OF EarthCentric Engineering, Inc. THE INFORMATION ON THIS DRAWING IS NOT FOR USE ON ANY OTHER SITE OR PROJECT. THE REPRODUCTION OR OTHER USE OF THIS DRAWING IN WHOLE OR IN PART, WITHOUT WRITTEN CONSENT OF EarthCentric Engineering, Inc., IS PROHIBITED.

COPYRIGHT 2015 EarthCentric Engineering, Inc.

SHEET NO.

C8.0

MAJOR SUBDIVISON PLAN

PIN# 9891-80-0703 & 9891-60-4884

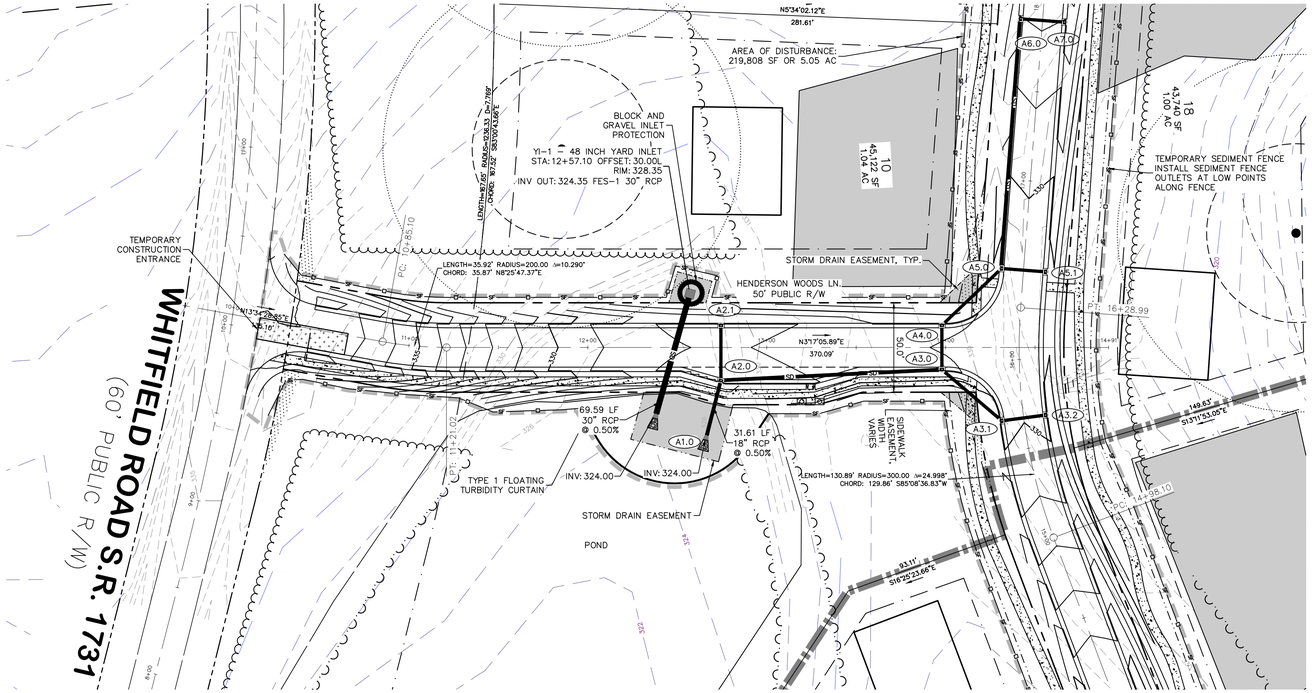


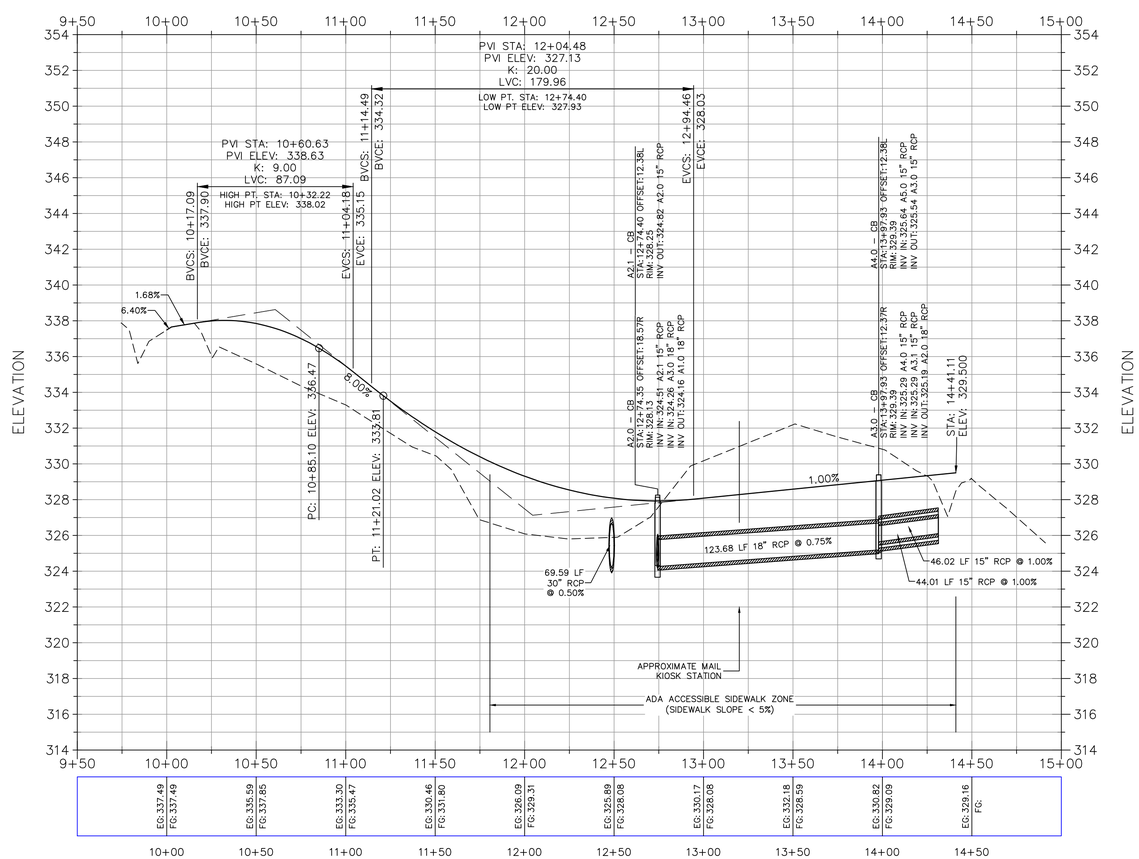


CALL BEFORE YOU DIG... IT'S THE LAW.

CALL N.C. ONE-CALL(1-800-632-4949)
FOR LOCATION OF UNDERGROUND UTILITIES AT LEAST
2 WORKING DAYS PRIOR TO BEGINNING GRADING OR TRENCHING.
NORTH CAROLINA GENERAL STATUTE 87-102


EarthCentric Engineering, Inc.
Licence # C-2638
204 W. Clay Street
Mebane, NC 27302
Phone: (919) 563-9041
Fax: (919) 304-3234
E-Mail: Phil.Koch@EarthCentric.com


PRINCIPAL ENGINEER
PHIL KOCH - NCPE #22634

# HENDERSON WOODS
ORANGE COUNTY, NORTH CAROLINA

## PLAN & PRO HENDERSON WOODS LN.
## STA: 10+00 TO STA: 14+41

| REV. | DATE | DESCRIPTION | BY |
|---|---|---|---|
| 1 | 09/09/2015 | ORANGE CO. COMMENTS | TMM |
| 2 | 09/16/2015 | SOLID WASTE COMMENTS | SCS |
| 3 | 11/18/2015 | WETLANDS DELINEATION | TMM |

| | |
|---|---|
| DATE: | JULY 2, 2015 |
| HORIZONTAL SCALE: | 1"=40' |
| VERTICAL SCALE: | 1"=4' |
| PROJECT MANAGER: | CPK |
| DRAWN BY: | TMM |
| PROJECT NO.: | 14-044 |
| DRAWING NAME: | 14-044 COUNCIL |


THIS DRAWING AND THE DESIGN HEREON ARE THE PROPERTY OF EarthCentric Engineering, Inc. THE INFORMATION ON THIS DRAWING IS NOT FOR USE ON ANY OTHER SITE OR PROJECT. THE REPRODUCTION OR OTHER USE OF THIS DRAWING IN WHOLE OR IN PART, WITHOUT WRITTEN CONSENT OF EarthCentric Engineering, Inc., IS PROHIBITED.

COPYRIGHT 2015 EarthCentric Engineering, Inc.


SHEET NO.

P1.0

MAJOR SUBDIVISON PLAN

PIN# 9891-80-0703 & 9891-60-4884

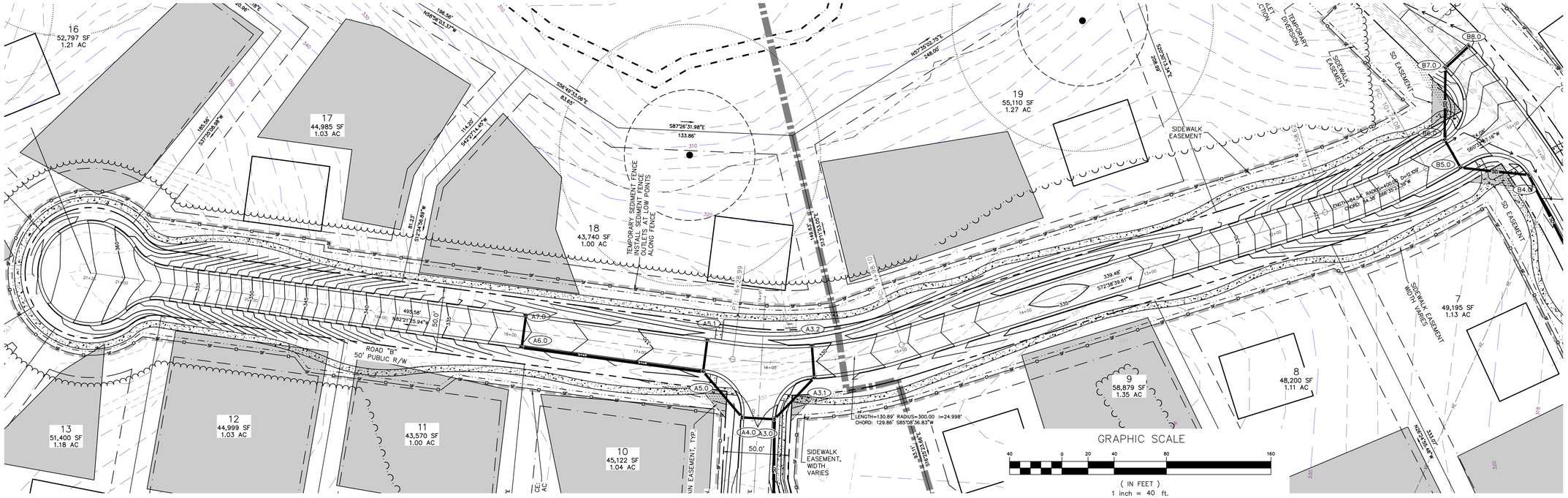


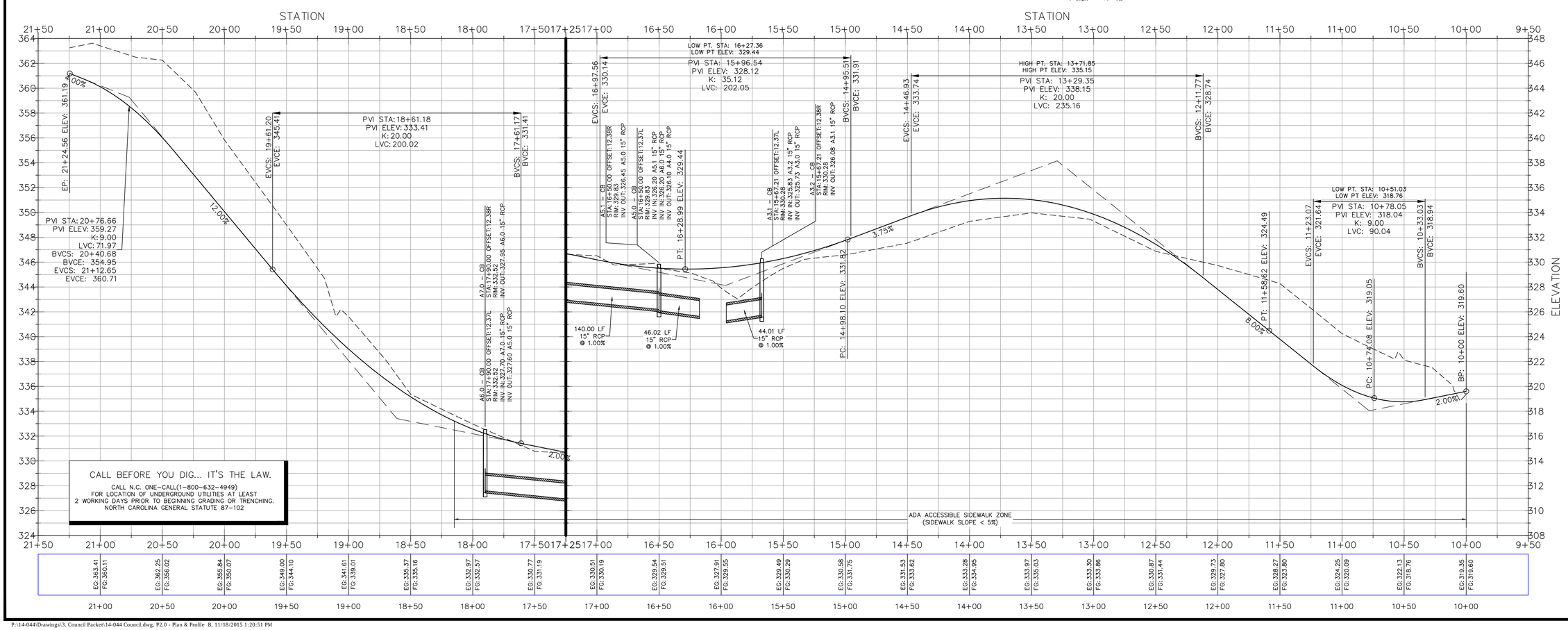


CALL BEFORE YOU DIG... IT'S THE LAW.

CALL N.C. ONE-CALL(1-800-632-4949)
FOR LOCATION OF UNDERGROUND UTILITIES AT LEAST
2 WORKING DAYS PRIOR TO BEGINNING GRADING OR TRENCHING.
NORTH CAROLINA GENERAL STATUTE 87-102

EarthCentric Engineering, Inc.
Licence # C-2638
204 W. Clay Street
Mebane, NC 27302
Phone: (919) 563-9041
Fax: (919) 304-3234
E-Mail: Phil.Koch@EarthCentric.com

ECE Incorporated

PRINCIPAL ENGINEER
PHIL KOCH - NCPE #22634

# HENDERSON WOODS
ORANGE COUNTY, NORTH CAROLINA

## PLAN & PROFILE MARTIN MADDEN WAY
STA: 10+00 TO STA: 21+25

| REV. | DATE | DESCRIPTION | BY |
|---|---|---|---|
| 1 | 09/09/2015 | ORANGE CO. COMMENTS | TMM |
| 2 | 09/16/2015 | SOLID WASTE COMMENTS | SCS |
| 3 | 11/18/2015 | WETLANDS DELINEATION | TMM |

| | |
|---|---|
| DATE: | JULY 2, 2015 |
| HORIZONTAL SCALE: | 1"=40' |
| VERTICAL SCALE: | 1"=4' |
| PROJECT MANAGER: | CPK |
| DRAWN BY: | TMM |
| PROJECT NO: | 14-044 |
| DRAWING NAME: | 14-044 COUNCIL |

THIS DRAWING AND THE DESIGN HEREON ARE THE PROPERTY OF EarthCentric Engineering, Inc. THE INFORMATION ON THIS DRAWING IS NOT FOR USE ON ANY OTHER SITE OR PROJECT. THE REPRODUCTION OR OTHER USE OF THIS DRAWING IN WHOLE OR IN PART, WITHOUT WRITTEN CONSENT OF EarthCentric Engineering, Inc., IS PROHIBITED.

COPYRIGHT 2015 EarthCentric Engineering, Inc.

SHEET NO.

P2.0

MAJOR SUBDIVISON PLAN

PIN# 9891-80-0703 & 9891-60-4884

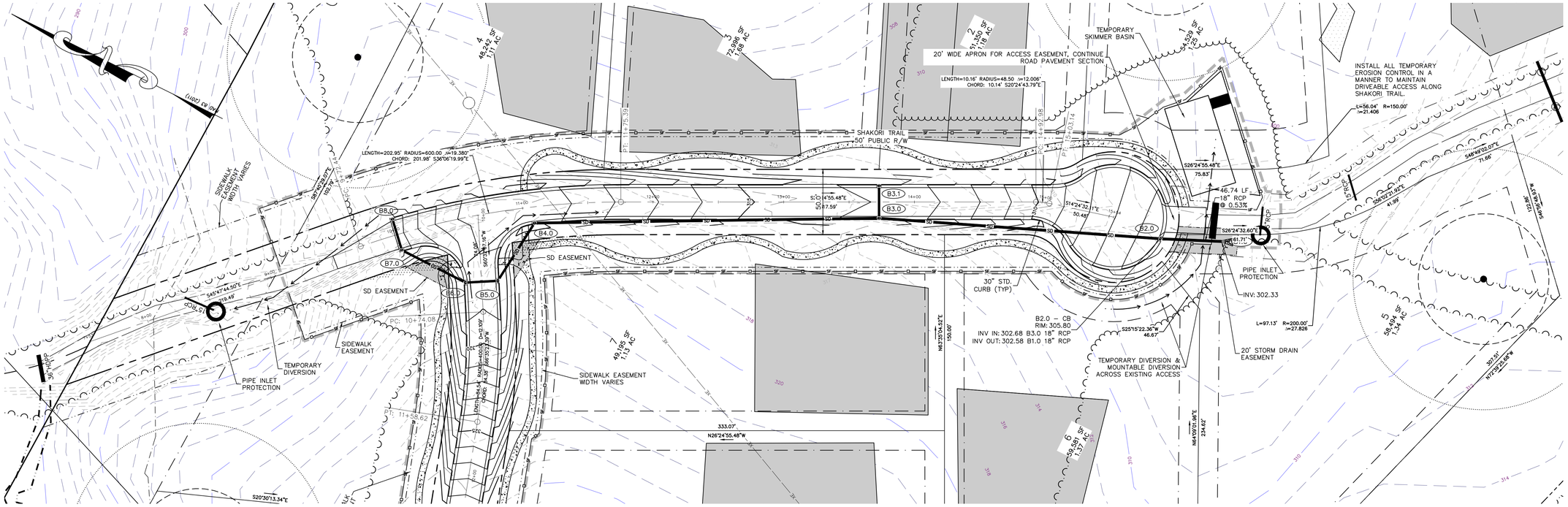


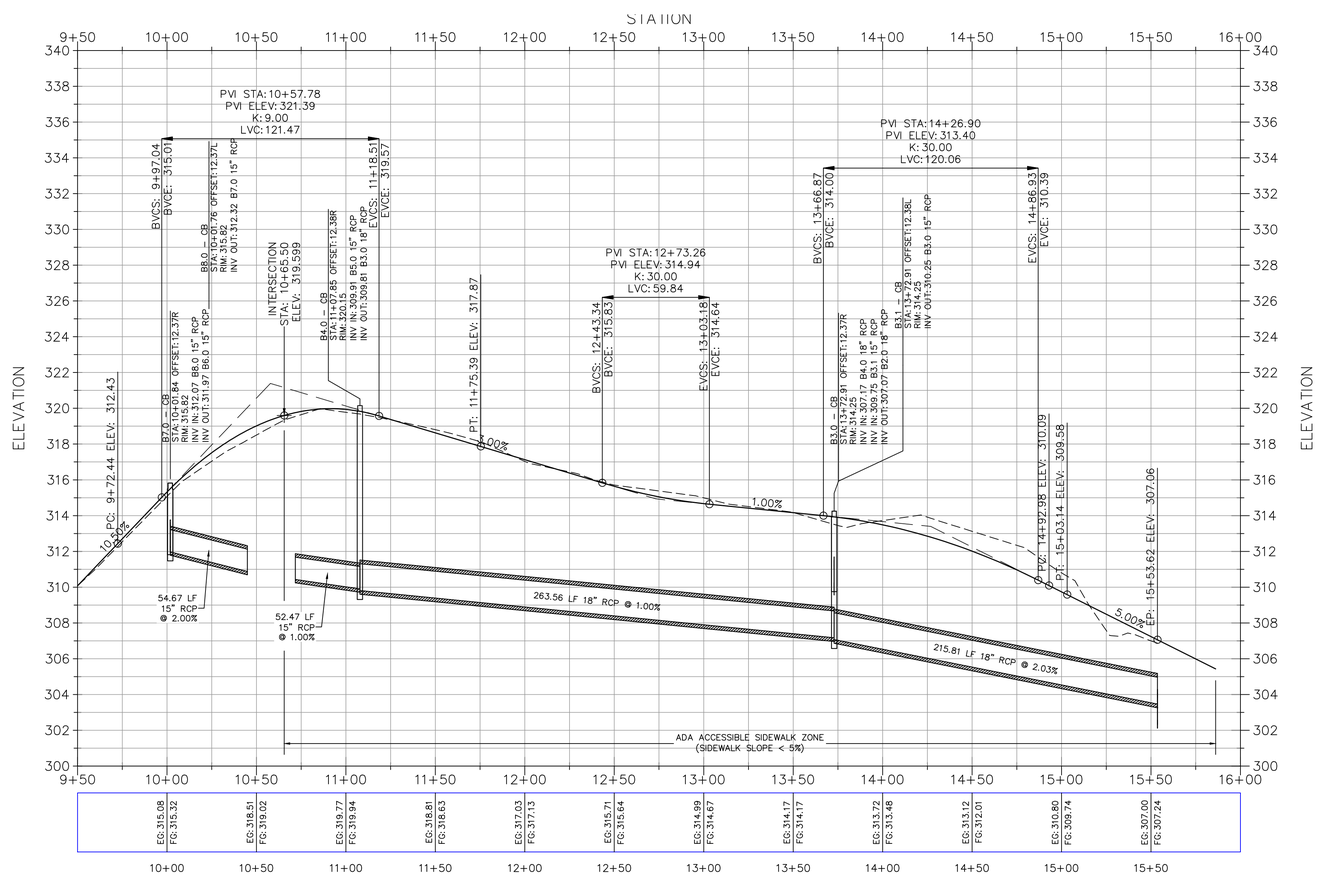


GRAPHIC SCALE

( IN FEET )
1 inch = 40 ft.

CALL BEFORE YOU DIG... IT'S THE LAW.

CALL N.C. ONE-CALL(1-800-632-4949)
FOR LOCATION OF UNDERGROUND UTILITIES AT LEAST
2 WORKING DAYS PRIOR TO BEGINNING GRADING OR TRENCHING.
NORTH CAROLINA GENERAL STATUTE 87-102

EarthCentric Engineering, Inc.
Licence # C-2638
204 W. Clay Street
Mebane, NC 27302
Phone: (919) 563-9041
Fax: (919) 304-3234
E-Mail: Phil.Koch@EarthCentric.com

PRINCIPAL ENGINEER
PHIL KOCH - NCPE #22634

# HENDERSON WOODS
ORANGE COUNTY, NORTH CAROLINA

## PLAN & PROFILE SHAKORI TRAIL
STA: 10+00 TO STA: 15+54

| REV. | DATE | DESCRIPTION | BY |
|---|---|---|---|
| 1 | 09/09/2015 | ORANGE CO. COMMENTS | TMM |
| 2 | 09/16/2015 | SOLID WASTE COMMENTS | SCS |
| 3 | 11/18/2015 | WETLANDS DELINEATION | TMM |

| | |
|---|---|
| DATE: | JULY 2, 2015 |
| HORIZONTAL SCALE: | 1"=40' |
| VERTICAL SCALE: | 1"=4' |
| PROJECT MANAGER: | CPK |
| DRAWN BY: | TMM |
| PROJECT NO: | 14-044 |
| DRAWING NAME: | 14-044 COUNCIL |

THIS DRAWING AND THE DESIGN HEREON ARE THE PROPERTY OF EarthCentric Engineering, Inc. THE INFORMATION ON THIS DRAWING IS NOT FOR USE ON ANY OTHER SITE OR PROJECT. THE REPRODUCTION OR OTHER USE OF THIS DRAWING IN WHOLE OR IN PART, WITHOUT WRITTEN CONSENT OF EarthCentric Engineering, Inc., IS PROHIBITED.

COPYRIGHT 2015 EarthCentric Engineering, Inc.

SHEET NO.

P3.0

MAJOR SUBDIVISON PLAN

PIN# 9891-80-0707 & 9891-60-4884

# INSTRUCTIONS FOR SILT FENCE OUTLET

INSTALLATION

1. REFER TO THE PLANS FOR LOCATIONS AND SPECIFICATIONS. DURING INSTALLATION OF THE SILT BARRIER OR SILT FENCE, INSPECT THE INSTALLATION TO DETERMINE IF OUTLETS ARE NEEDED ACCORDING TO THE CRITERIA SET FORTH IN THE SPECIFICATIONS FOR THE BARRIER AND FENCE. IF THERE ARE QUESTIONS OR PROBLEMS WITH THE LOCATION, EXTENT, OR METHOD OF INSTALLATION, CONTACT THE ENGINEER, ARCHITECT, OR RESPONSIBLE PERSONNEL ON THE SITE FOR ASSISTANCE. EROSION CONTROL PERSONNEL HAVE COPIES OF INSTRUCTIONS AND MAY HAVE PHOTOGRAPHS OF PROPERLY INSTALLED OUTLETS AS AN AID TO INSTALLATION.

IF THE SILT FENCE OUTLET IS NOT INSTALLED CORRECTLY THE FIRST TIME, IT WILL HAVE TO BE REBUILT.

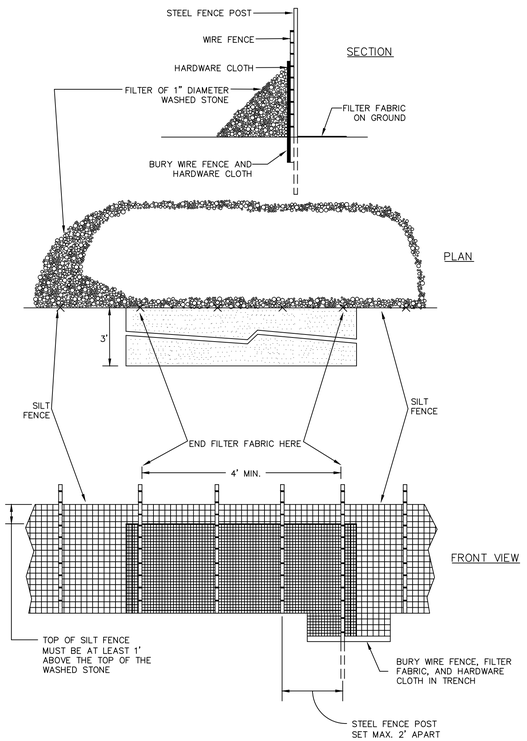


## SILT FENCE OUTLET

2. DETERMINE THE EXACT LOCATION OF THE OUTLET BEFORE COMPLETING INSTALLATION OF THE SILT BARRIER OR SILT FENCE, TAKING INTO CONSIDERATION:

– INSTALL THE OUTLET AT THE LOWEST POINT(S) IN THE BARRIER OR FENCE WHERE WATER WILL POND.

– INSTALL THE OUTLET WHERE IT IS ACCESSIBLE FOR INSTALLATION, MAINTENANCE, AND REMOVAL.

– ALLOW AT LEAST:

15 FEET BETWEEN THE BARRIER OR FENCE AND SINGLE–STORY BUILDINGS.

25 FEET FOR FORK LIFTS BETWEEN THE BARRIER OR FENCE AND MULTIPLE–STORY BUILDINGS.

10 FEET BETWEEN THE BARRIER OR FENCE AND THE TOE OF FILL SLOPES.

– PLACE THE OUTLET SO THAT WATER FLOWING THROUGH IT WILL NOT CREATE AN EROSION HAZARD BELOW: AVOID STEEP SLOPES BELOW THE OUTLET AND AREAS WITHOUT PROTECTIVE VEGETATION. USE SLOPE DRAINS IF NECESSARY.

– DETERMINE THE LOCATION OF THE OUTLET: FOR A SILT BARRIER, WHEN THE TRENCH IS DUG TO BURY THE BOTTOM OF THE FABRIC BECAUSE THE BARRIER WILL BE OMITTED AT THE OUTLET; FOR A SILT FENCE, WHEN THE WIRE FENCE IS IN PLACE BECAUSE THE FILTER FABRIC WILL BE OMITTED AT THE OUTLET.

3. REFER TO THE ILLUSTRATIONS OF THE OUTLET IN THE PLAN.

4. CLEAR STUMPS AND ROOTS FROM THE LOCATION OF THE OUTLET. CLEAR ADEQUATE ACCESS FOR THE EQUIPMENT NEEDED FOR INSTALLATION, MAINTENANCE, AND REMOVAL.

5. CONSTRUCT OUTLET:

– JUST BELOW THE GAP IN THE BARRIER, PLACE A LAYER OF FILTER FABRIC ON THE GROUND TO PROTECT THE SOIL FROM EROSION BY OUTFLOW FROM THE OUTLET; PLACE 6 INCHES OF THE UPPER EDGE IN THE TRENCH. STAKE THE REMAINING EDGES OF THE FABRIC TO HOLD IT IN PLACE.

– ALONG THE GAP WHERE THE OUTLET WILL GO, PLACE STEEL FENCE POSTS FOR STRENGTH. THE POSTS MUST BE A MAXIMUM OF 2 FEET APART AND DRIVEN INTO SOLID GROUND AT LEAST 18 INCHES.

– PLACE HARDWARE CLOTH (WELDED GALVANIZED SCREEN WITH SQUARE 1/4 – 1/2 – INCH HOLES) ON THE UPHILL SIDE OF THE POSTS TO HOLD THE WASHED STONE IN PLACE. PUT 6 INCHES OF THE BOTTOM OF THE CLOTH IN THE TRENCH AND FASTEN IT TO THE POSTS WITH LENGTHS OF WIRE.

– BURY THE BOTTOM OF THE HARDWARE CLOTH AND THE UPPER EDGE OF THE FILTER FABRIC BELOW THE OUTLET IN THE TRENCH AND COMPACT THE FILL.

– PLACE A FILTER OF 1–INCH DIAMETER WASHED STONE ON THE UPHILL SIDE OF THE OUTLET. PILE THE STONE UP TO THE TOP OF THE HARDWARE CLOTH AND OVER THE JOINT BETWEEN THE OUTLET AND THE BARRIER.

MAINTENANCE

MATERIALS, EQUIPMENT, AND PERSONNEL MUST BE AVAILABLE FOR MAINTENANCE AT ALL TIMES.

1. INSPECT THE SILT FENCE OUTLET:

– DURING CONSTRUCTION: TO DETERMINE IF MACHINERY, FALLING TREES, ETC. HAVE DAMAGED THE BARRIER, FENCE, OR OUTLET; IF DAMAGED, MAKE REPAIRS. TO SEE THAT FILL MATERIAL HAS NOT ACCUMULATED AGAINST THE OUTLET, BLOCKING OUTFLOW; IF IT HAS, REMOVE THE MATERIAL, REPAIR THE DAMAGE, AND MOVE THE FENCE OR FILL SO THAT IT DOES NOT HAPPEN AGAIN.

– AFTER EACH RAINFALL: TO DETERMINE IF RUNOFF FLOWING THROUGH THE OUTLET HAS CAUSED DAMAGE BY UNDERMINING THE FENCE OR OUTLET, OR IF ACCUMULATED WATER HAS COLLAPSED THE OUTLET; IF IT HAS, MAKE REPAIRS OR INSTALL A SEDIMENT TRAP IF NECESSARY TO PREVENT FUTURE FAILURES.

2. CLEAN OUT ACCUMULATED SEDIMENT WHEN IT REACHES A DEPTH OF ONE–HALF THE HEIGHT OF THE OUTLET. PLACE THE SEDIMENT IN A DISPOSAL AREA, OR MIX IT WITH DRY SOIL ON THE SITE IF APPROPRIATE.

DO NOT DISPOSE OF SEDIMENT IN A MANNER THAT WILL CREATE AN EROSION HAZARD.

3. WHEN THE STONE FILTER BECOMES CLOGGED, PREVENTING FLOW THROUGH THE FILTER, REMOVE THE CONTAMINATED STONE, DISPOSE OF IT PROPERLY, AND REPLACE IT WITH CLEAN WASHED STONE.

4. REPAIR THE OUTLET IF DAMAGED BY USE OR DURING MAINTENANCE. REBUILD IT TO THE ORIGINAL CONFIGURATION.

REMOVAL

1. WHEN GRADING THE DRAINAGE AREA ABOVE THE OUTLET HAS BEEN COMPLETED AND THE DISTURBED AREA SUFFICIENTLY STABILIZED TO RESTRAIN EROSION, THE OUTLET MUST BE REMOVED.

2. CLEAN OUT ACCUMULATED SEDIMENT AND DISPOSE OF IT PROPERLY.

3. REMOVE POSTS, FENCE, FABRIC, WIRE, AND WASHED STONE; DISPOSE OF THEM PROPERLY.

4. GRADE THE LOCATION AS NECESSARY.

5. STABILIZE THE DISTURBED AREA WHERE THE OUTLET WAS LOCATED.

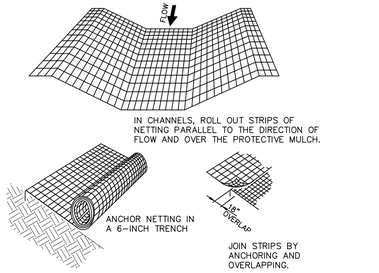


INSTALLATION OF NETTING AND MATTING

PRODUCTS DESIGNED TO CONTROL EROSION SHOULD BE INSTALLED IN ACCORDANCE WITH MANUFACTURER'S INSTRUCTIONS.

ANY MAT OR BLANKET–TYPE PRODUCT USED AS A PROTECTIVE MULCH SHOULD PROVIDE COVER OF AT LEAST 30% OF THE SURFACE WHERE IT IS APPLIED.

1. APPLY LIME, FERTILIZER AND SEED BEFORE LAYING THE NET OR MAT.

2. START LAYING THE NET FROM THE TOP OF THE CHANNEL OR SLOPE AND UNROLL IT DOWN THE GRADE. ALLOW NETTING TO LAY LOOSELY ON THE SOIL BUT WITHOUT WRINKLES – DO NOT STRETCH.

3. TO SECURE THE NET, BURY THE UPSLOPE END IN A SLOT OR TRENCH NO LESS THAN 6 INCHES DEEP, COVER WITH SOIL, AND TAMP FIRMLY. STAPLE THE NET EVERY 12 INCHES ACROSS THE TOP END AND EVERY 3 FEET AROUND THE EDGES AND BOTTOM. WHERE 2 STRIPS OF NET ARE LAID SIDE BY SIDE, THE ADJACENT EDGES SHOULD BE OVERLAPPED 3 INCHES AND STAPLED TOGETHER. EACH STRIP OF NETTING SHOULD ALSO BE STAPLED DOWN THE CENTER, EVERY 3 FEET. DO NOT STRETCH THE NET WHEN APPLYING STAPLES.

4. TO JOIN TWO STRIPS, CUT A TRENCH TO ANCHOR THE END OF THE NEW NET. OVERLAP THE END OF THE PREVIOUS ROLL 18 INCHES AND STAPLE EVERY 12 INCHES JUST BELOW THE ANCHOR SLOT.

MAINTENANCE

INSPECT ALL MULCHES PERIODICALLY, AND AFTER RAINSTORMS TO CHECK FOR RILL EROSION, DISLOCATION, OR FAILURE. WHERE EROSION IS OBSERVED, APPLY ADDITIONAL MULCH. IF WASHOUT OCCURS, REPAIR THE SLOPE GRADE, RESEED, AND REINSTALL MULCH. CONTINUE INSPECTIONS UNTIL VEGETATION IS FIRMLY ESTABLISHED.

## NETS AND MATS

# CONSTRUCTION SEQUENCE

1. EROSION CONTROL MEASURES INCLUDE A GRAVEL CONSTRUCTION EXIT, SEDIMENT TRAPPING MEASURES, STABILIZATION AT PIPE OUTLETS, AND THE STABILIZATION OF DISTURBED AREAS ACCORDING TO THE STABILIZATION TIME TABLE SHOWN BELOW AFTER COMPLETION OF ANY PHASE OF GRADING. STABILIZATION CONSISTS OF EITHER TEMPORARY MULCHING OR PERMANENT VEGETATION ON AREAS THAT ARE NOT PAVED.
2. OBTAIN ALL THE APPROVALS AND PERMITS NECESSARY TO BEGIN AND COMPLETE THE PROJECT. THESE APPROVALS AND PERMITS INCLUDE, BUT ARE NOT LIMITED TO THE FOLLOWING: SITE PLAN APPROVAL, EROSION CONTROL PLAN APPROVAL, AND DRIVEWAY PERMIT APPROVAL.
3. SCHEDULE AND HOLD A PRECONSTRUCTION CONFERENCE BEFORE STARTING ANY ADDITIONAL CLEARING, OR GRADING. ATTENDEES SHALL INCLUDE THE OWNER, THE CONTRACTOR(S) RESPONSIBLE FOR THE DISTURBANCE AND EROSION CONTROL, AND EROSION CONTROL PERSONNEL.
4. INSTALL THE GRAVEL FOR CONSTRUCTION EXIT. CLEAR AREAS AS NECESSARY TO GAIN ACCESS TO SEDIMENT TRAP LOCATION AND POND AREA..
5. INSTALL SEDIMENT TRAP, SEDIMENT FENCE, SILT FENCE OUTLETS, TURBIDITY CURTAIN AND TEMPORARY DIVERSIONS.
6. COMPLETE CLEARING AND GRUBBING.
7. PERFORM ROUGH GRADING.
8. INSTALL STORM DRAINAGE. INSTALL TEMPORARY PIPE AND INLET PROTECTION.
9. FINE GRADE SUBGRADE.
10. INSTALL CURB AND GUTTER.
11. PLACE AND COMPACT STONE.
12. PAVE ROADWAY.
13. INSTALL RIP–RAP OUTLETS.
14. FINE GRADE BACK OF CURB AND GRADE FOR SIDEWALK. INSTALL SIDEWALK.
15. INSTALL SEED AND MULCH AND/OR LANDSCAPING.
16. PROVIDE DISTURBED AREAS WITH GROUND COVER SUFFICIENT TO RESTRAIN EROSION ACCORDING TO THE STABILIZATION TIME TABLE SHOWN BELOW AFTER COMPLETION OF ANY PHASE OF GRADING, WHETHER CLEARING OR ROUGH OR FINISHED GRADING.
17. INSPECT AND MAINTAIN THE EROSION CONTROL DEVICES SO THEY CONTINUE TO FUNCTION PROPERLY. REFER TO THE EROSION CONTROL PLAN FOR SPECIFIC INSTRUCTIONS FOR EACH DEVICE. THE PERSON RESPONSIBLE FOR EROSION CONTROL IS ALSO RESPONSIBLE FOR TAKING THE INITIATIVE IN INSPECTING AND MAINTAINING THESE DEVICES; DO NOT WAIT FOR THE EROSION CONTROL INSPECTOR TO POINT OUT THE NEED FOR MAINTENANCE AND REPAIRS.
18. KEEP MUD AND DEBRIS OFF THE PUBLIC STREET AT ALL TIMES. IF MUD OR DEBRIS IS TRACKED FROM THE SITE, USE A SHOVEL AND BROOM TO REMOVE IT IMMEDIATELY. IF MUD AND DEBRIS ARE NOT KEPT OFF THE STREET ENFORCEMENT ACTIONS (REVOKING THE GRADING PERMIT AND/OR A STOP WORK ORDER) MAY BE TAKEN!!!
19. IF IT IS DETERMINED DURING THE COURSE OF CONSTRUCTION THAT SIGNIFICANT SEDIMENT IS LEAVING THE SITE DESPITE PROPER IMPLEMENTATION AND MAINTENANCE OF THE APPROVED EROSION CONTROL PLAN, THE PERSON RESPONSIBLE FOR THE LAND–DISTURBING ACTIVITY IS OBLIGATED TO TAKE ADDITIONAL PROTECTIVE ACTION.
20. PERMANENTLY STABILIZE ALL DISTURBED AREAS. REFER TO INSTRUCTIONS IN THE PLAN FOR THE TYPE(S) OF STABILIZATION TO BE USED ON THE SITE.
21. WHEN CONSTRUCTION IS COMPLETED, ALL TEMPORARY EROSION CONTROL DEVICES MUST BE REMOVED AFTER THE DRAINAGE AREA ABOVE HAS BEEN SUFFICIENTLY STABILIZED TO RESTRAIN EROSION. REMOVE AND PROPERLY DISPOSE OF ACCUMULATED SEDIMENT AND THE DEBRIS FROM THE DEVICES, AND STABILIZE THE LOCATIONS.
22. ARRANGE A FINAL INSPECTION WITH THE EROSION CONTROL INSPECTOR TO CONFIRM THAT ALL REQUIREMENTS OF THE APPROVED EROSION CONTROL PLAN HAVE BEEN COMPLETED.

CONSTRUCTION SPECIFICATIONS:

1. REMOVE AND PROPERLY DISPOSE OF ALL TREES, BRUSH, STUMPS, AND OTHER OBJECTIONABLE MATERIAL.
2. ENSURE THAT THE MINIMUM CONSTRUCTED CROSS SECTION MEETS ALL DESIGN REQUIREMENTS.
3. ENSURE THAT THE TOP OF THE DIKE IS NOT LOWER AT ANY POINT THAN THE DESIGN ELEVATION PLUS THE SPECIFIED SETTLEMENTS.
4. PROVIDE SUFFICIENT ROOM AROUND DIVERSIONS TO PERMIT MACHINE REGRADING AND CLEANOUT.
5. VEGETATE THE RIDGE IMMEDIATELY AFTER CONSTRUCTION, UNLESS IT WILL REMAIN IN PLACE LESS THAN 30 WORKING DAYS. INSPECT TEMPORARY DIVERSIONS ONCE A WEEK AND AFTER EVERY RAINFALL.

MAINTENANCE:

IMMEDIATELY REMOVE SEDIMENT FROM THE FLOW AREA AND REPAIR THE DIVERSION RIDGE. CAREFULLY CHECK OUTLETS AND MAKE TIMELY REPAIRS AS NEEDED. WHEN THE AREA PROTECTED IS PERMANENTLY STABILIZED, REMOVE THE RIDGE AND THE CHANNEL TO BLEND WITH THE NATURAL GROUND LEVEL AND APPROPRIATELY STABILIZE IT.

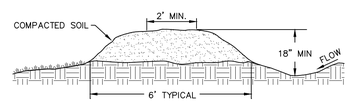


## TEMPORARY DIVERSION DITCH

NTS

UPON COMPLETION AND ACCEPTANCE OF THE IMPROVEMENTS OUTLINED ON THE SITE PLAN, THE ENTIRE AREA DISTURBED BY PROJECT CONSTRUCTION SHALL BE PROVIDED WITH A PERMANENT VEGETATIVE COVER. THE DISTURBED AREAS SHALL BE FINELY TILLED BY HARROWING. WHERE SOIL CONDITIONS ARE UNFAVORABLE FOR SUCCESSFUL ESTABLISHMENT OF COVER, AVAILABLE TOPSOIL SHALL BE SPREAD. DOLOMITIC LIMESTONE SHALL BE APPLIED AT THE RATE OF 4,000 LBS. PER ACRE AND A 10–10–10 COMMERCIAL FERTILIZER MIX SHALL BE APPLIED AT A RATE OF 1000 LBS., PER ACRE TO THE DISTURBED AREA. IT SHALL BE UNIFORMLY APPLIED TO DISTURBED AREAS ACCORDING TO THE FOLLOWING SCHEDULE BY BROADCASTING WITH A CYCLONE SEEDER OR CLOSE DRILL. SEED SHALL BE LIGHTLY COVERED AND SOIL SHALL BE FIRMED. STRAW MULCH SHALL BE APPLIED TO THE SEEDED AREA AT THE RATE OF 1–1/2 BALES PER 1000 SQ. FT. AND TACKED.

| DATES | RATE #/ACRE | DATES | RATE #/ACRE |
|---|---|---|---|
| JANUARY 1 – MAY 1 | | NOVEMBER 1 – JANUARY 31 | |
| LIMESTONE | 2000 | TALL FESCUE | 100 |
| FERTILIZER (10–10–10) | 750 | RYE | 50 |
| RYE (GRAIN) | 120 | | |
| MULCH – STRAW & TACK | 4000 | FEBRUARY 1 – APRIL 30 | |
| | | TALL FESCUE | 80 |
| MAY 1 – AUGUST 15 | | BLUEGRASS | 60 |
| LIMESTONE | 2000 | | |
| FERTILIZER (10–10–10) | 750 | MAY 1 – JULY 31 | |
| GERMAN MILLET | 40 | TALL FESCUE | 70 |
| MULCH – STRAW & TACK | 4000 | WEEPING LOVEGRASS | 20 |
| | | | |
| AUGUST 15 – JANUARY 1 | | AUGUST 1 – OCTOBER 31 | |
| LIMESTONE | 2000 | TALL FESCUE | 100 |
| FERTILIZER (10–10–10) | 1000 | SUDAN HYBRID | 50 |
| RYE (GRAIN) | 120 | | |
| MULCH – STRAW & TACK | 4000 | | |

SCHEDULE FOR PROVIDING PERMANENT VEGETATIVE COVER

STABILIZATION TIME TABLE

| SITE AREA DESCRIPTION | STABILIZATION | TIMEFRAME EXCEPTIONS |
|---|---|---|
| PERIMETER DIKES, SWALES, DITCHES AND SLOPES | 7 DAYS | NONE |
| HIGH QUALITY WATER (HQW) ZONES | 7 DAYS | NONE |
| SLOPES STEEPER THAN 3:1 | 7 DAYS | IF SLOPES ARE 10' IN LENGTH AND ARE NOT STEEPER THAN 2:1, 14 DAYS ARE ALLOWED |
| SLOPES 3:1 OR FLATTER | 14 DAYS | 7 DAYS FOR SLOPES > 50' IN LENGTH |
| ALL OTHER AREAS WITH SLOPES FLATTER THAN 4:1 | 14 DAYS | NONE, EXCEPT FOR PERIMETERS & HQW ZONES |

ST–10

PERMANENT & TEMPORARY SEEDING SPECIFICATIONS

SCALE :N.T.S. | DATE : 4/28/06 | DRAWN BY: MHW

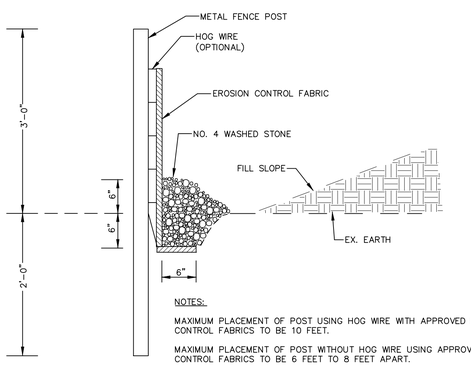


NOTES:

MAXIMUM PLACEMENT OF POST USING HOG WIRE WITH APPROVED EROSION CONTROL FABRICS TO BE 10 FEET.

MAXIMUM PLACEMENT OF POST WITHOUT HOG WIRE USING APPROVED EROSION CONTROL FABRICS TO BE 6 FEET TO 8 FEET APART.

POST METAL T–POST 5 FEET OR 6 FEET IN HEIGHT DEPENDING ON FILL SLOPE.

FABRIC 36 INCHES IN WIDTH (MUST MEET ENGINEERS SPECIFICATIONS FOR EROSION CONTROL).

STONE NO. 4 WASHED STONE TO BE PLACED 12 INCHES DEEP AT SILT FENCE.

## TEMPORARY SILT FENCE

NTS

# NPDES PERMIT REQUIREMENTS

THIS PROJECT IS SUBJECT TO THE REQUIREMENTS OF NPDES PERMIT FOR CONSTRUCTION ACTIVITIES (PERMIT NO. NCG010000). THE ITEMS NOTED ARE SOME OF THE OBLIGATIONS ASSOCIATED WITH THE NPDES PERMIT PROCESS.

CONTROLS FOR STORMWATER DISCHARGES

1. THE PERMITTEE SHALL IMPLEMENT THE SOIL AND EROSION CONTROL PLAN, WHICH HAS BEEN APPROVED BY THE APPROVAL AUTHORITY. THE APPROVED PLAN IS CONSIDERED A REQUIREMENT OR CONDITION OF NPDES PERMIT. DEVIATION FROM THE APPROVED PLAN, OR APPROVED AMENDMENT TO THE PLAN, SHALL CONSTITUTE A VIOLATION OF THE TERMS AND CONDITIONS OF THIS GENERAL PERMIT EXCEPT THAT DEVIATION FROM THE APPROVED PLAN WILL BE ALLOWED TO CORRECT AN EMERGENCY SITUATION WHERE SEDIMENTS ARE BEING DISCHARGED OFF THE SITE, EVEN THOUGH THE APPROVED PLAN IS IN EFFECT. SUCH A DEVIATION FROM THE APPROVED PLAN SHALL BE NOTED ON THE APPROVED PLAN MAINTAINED AT THE JOB SITE. A SIGNED COPY OF THE APPROVED PLAN SHALL BE MAINTAINED ON THE SITE AT ALL TIMES.
2. EQUIPMENT UTILIZED DURING THE CONSTRUCTION ACTIVITY ON A SITE MUST BE OPERATED AND MAINTAINED IN SUCH A MANNER AS TO PREVENT THE POTENTIAL OR ACTUAL POLLUTION OF THE SURFACE OR GROUND WATERS OF THE STATE. FUELS, LUBRICANTS, COOLANTS, AND HYDRAULIC FLUIDS, OR ANY OTHER PETROLEUM PRODUCTS, SHALL NOT BE DISCHARGED ONTO THE GROUND OR INTO SURFACE WATERS. SPENT FLUIDS SHALL BE DISPOSED OF IN A MANNER SO AS NOT TO ENTER THE WATERS, SURFACE OR GROUND, OF THE STATE AND IN ACCORDANCE WITH APPLICABLE STATE AND FEDERAL DISPOSAL REGULATIONS. ANY SPILLED FLUIDS SHALL BE CLEANED UP TO THE EXTENT PRACTICABLE AND DISPOSED OF IN A MANNER SO AS NOT TO ALLOW THEIR ENTRY INTO THE WATERS, SURFACE OR GROUND, OF THE STATE.
3. HERBICIDE, PESTICIDE, AND FERTILIZER USAGE DURING THE CONSTRUCTION ACTIVITY SHALL BE RESTRICTED TO THOSE MATERIALS APPROVED BY EPA AND SHALL BE IN ACCORDANCE WITH LABEL RESTRICTIONS.
4. ALL WASTES COMPOSED OF BUILDING MATERIALS SHALL BE DISPOSED OF IN ACCORDANCE WITH NORTH CAROLINA GENERAL STATUTES.
5. THE PERMITTEE SHALL REPORT TO THE CENTRAL OFFICE OR THE APPROPRIATE REGIONAL OFFICE ANY NONCOMPLIANCE WHICH MAY ENDANGER HEALTH OR THE ENVIRONMENT. ANY INFORMATION SHALL BE PROVIDED ORALLY WITHIN 24 HOURS FROM THE TIME THE PERMITTEE BECAME AWARE OF THE CIRCUMSTANCES. A WRITTEN SUBMISSION SHALL ALSO BE PROVIDED WITHIN 5 DAYS OF THE TIME THE PERMITTEE BECOMES AWARE OF THE CIRCUMSTANCES.

   THE WRITTEN SUBMISSION SHALL CONTAIN A DESCRIPTION OF THE NONCOMPLIANCE, AND ITS CAUSES; THE PERIOD OF NONCOMPLIANCE, INCLUDING EXACT DATES AND TIMES, AND IF THE NONCOMPLIANCE HAS NOT BEEN CORRECTED, THE ANTICIPATED TIME IT IS EXPECTED TO CONTINUE; AND STEPS TAKEN OR PLANNED TO REDUCE, ELIMINATE, AND PREVENT REOCCURRENCE OF THE NONCOMPLIANCE (SEE SPECIFIC PERMIT REQUIREMENTS FOR REPORTING INFORMATION).

MINIMUM MONITORING AND REPORTING REQUIREMENTS

MINIMUM MONITORING AND REPORTING REQUIREMENTS ARE AS FOLLOWS UNLESS OTHERWISE APPROVED IN WRITING BY THE DIRECTOR OF THE DIVISION OF ENVIRONMENTAL MANAGEMENT.

1. ALL SEDIMENTATION AND EROSION CONTROL FACILITIES SHALL BE INSPECTED BY OR UNDER THE DIRECTION OF THE PERMITTEE AT LEAST ONCE EVERY SEVEN CALENDAR DAYS AND WITHIN 24 HOURS AFTER ANY STORM EVENT OF GREATER THEN 0.5 INCHES OF RAIN PER 24 HOUR PERIOD.
2. STORMWATER RUNOFF DISCHARGES SHALL BE INSPECTED BY OBSERVATION FOR STORMWATER DISCHARGE CHARACTERISTICS AS DEFINED BELOW AT THE ABOVE FREQUENCY TO EVALUATE THE EFFECTIVENESS OF THE POLLUTION CONTROL FACILITIES OR PRACTICES. IF ANY VISIBLE OFF–SITE SEDIMENTATION IS LEAVING THE SITE, CORRECTIVE ACTION SHALL BE TAKEN TO REDUCE THE DISCHARGE OF SEDIMENTS.

| Stormwater Discharge Characteristics | Monitoring Type1 | Monitoring Location2 |
|---|---|---|
| Color | | SDO |
| Odor | | SDO |
| Clarity | | SDO |
| Floating Solids | | SDO |
| Suspended Solids | | SDO |
| Foam | | SDO |
| Oil Sheen | | SDO |
| Other obvious indicators of stormwater pollution | | SDO |

FOOTNOTES:

1 MONITORING TYPE: THE MONITORING REQUIRES A QUALITATIVE OBSERVATION OF EACH STORMWATER OUTFALL. NO ANALYTICAL TESTING OR SAMPLING IS REQUIRED.

2 SAMPLE LOCATION: STORMWATER DISCHARGE OUTFALL (SDO)

3. THE OPERATOR SHALL KEEP A RECORD OF INSPECTIONS. VISIBLE SEDIMENTATION FOUND OFF THE SITE SHALL BE RECORDED WITH A BRIEF EXPLANATION AS TO THE MEASURES TAKEN TO PREVENT FUTURE RELEASES AS WELL AS ANY MEASURES TAKEN TO CLEAN UP THE SEDIMENT THAT HAS LEFT THE SITE. THIS RECORD SHALL BE MADE AVAILABLE TO DEM OR AUTHORIZED AGENT UPON REQUEST. REPORTS SHALL BE MAINTAINED ONSITE AT ALL TIMES.
4. PERMITTEE SHALL AT ALL TIMES PROVIDE THE OPERATION AND MAINTENANCE NECESSARY TO OPERATE THE PERMITTED STORMWATER CONTROLS AT OPTIMUM EFFICIENCY.

CONSTRUCTION SPECIFICATIONS

1. REMOVE AND PROPERLY DISPOSE OF ALL TREES, BRUSH, STUMPS, AND OTHER OBJECTIONABLE MATERIAL.
2. ENSURE THAT THE MINIMUM CONSTRUCTED CROSS SECTION MEETS ALL DESIGN REQUIREMENTS.
3. ENSURE THAT THE TOP OF THE DIKE IS NOT LOWER AT ANY POINT THAN THE DESIGN ELEVATION PLUS THE SPECIFIED SETTLEMENTS.
4. PROVIDE SUFFICIENT ROOM AROUND DIVERSIONS TO PERMIT MACHINE REGRADING AND CLEANOUT.

MAINTENANCE

INSPECT TEMPORARY DIVERSIONS ONCE A WEEK AND AFTER EVERY RAINFALL. IMMEDIATELY REMOVE SEDIMENT FROM THE FLOW AREA AND REPAIR THE DIVERSION RIDGE. CAREFULLY CHECK OUTLETS AND MAKE TIMELY REPAIRS AS NEEDED. WHEN THE AREA PROTECTED IS PERMANENTLY STABILIZED, REMOVE THE RIDGE AND THE CHANNEL TO BLEND WITH THE NATURAL GROUND LEVEL AND APPROPRIATELY STABILIZE IT.

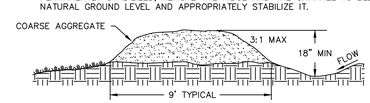


## MOUNTABLE GRAVEL DIVERSION

NTS

EarthCentric Engineering, Inc.
Licence # C-2638
204 W. Clay Street
Mebane, NC 27302
Phone: (919) 563-9041
Fax: (919) 304-3234
E-Mail: Phil.Koch@EarthCentric.com

PRINCIPAL ENGINEER
PHIL KOCH - NCPE #22634

HENDERSON WOODS
ORANGE COUNTY, NORTH CAROLINA

EROSION CONTROL DETAILS

| REV. | DATE | DESCRIPTION | BY |
|---|---|---|---|
| 1 | 09/09/2015 | ORANGE CO. COMMENTS | TMM |
| 2 | 09/16/2015 | SOLID WASTE COMMENTS | SCS |
| 3 | 11/18/2015 | WETLANDS DELINEATION | TMM |

| | |
|---|---|
| DATE: | JULY 1, 2015 |
| HORIZONTAL SCALE: | N/A |
| VERTICAL SCALE: | N/A |
| PROJECT MANAGER: | CPK |
| DRAWN BY: | SCS |
| PROJECT NO: | 14-044 |
| DRAWING NAME: | 14-044 DETAILS |

THIS DRAWING AND THE DESIGN HEREON ARE THE PROPERTY OF EarthCentric Engineering, Inc. THE INFORMATION ON THIS DRAWING IS NOT FOR USE ON ANY OTHER SITE OR PROJECT. THE REPRODUCTION OR OTHER USE OF THIS DRAWING IN WHOLE OR IN PART, WITHOUT WRITTEN CONSENT OF EarthCentric Engineering, Inc., IS PROHIBITED.

COPYRIGHT 2015 EarthCentric Engineering, Inc.

SHEET NO.

D1.0

PRELIMINARY

PIN# 9891-80-0707 & 9891-60-4884

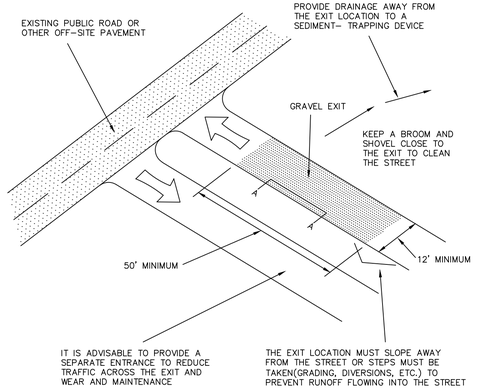


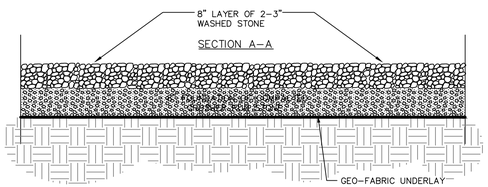


# CONSTRUCTION EXIT

NTS

INSTRUCTIONS FOR
GRAVEL CONSTRUCTION EXIT

INSTALLATION

1. REFER TO PLANS FOR LOCATION AND SPECIFICATIONS. IF THERE ARE QUESTIONS OR PROBLEMS WITH THE LOCATION OR METHODS OF INSTALLATION CONTACT THE ENGINEER, ARCHITECT, OR RESPONSIBLE PERSONNEL ON THE SITE FOR ASSISTANCE. EROSION CONTROL PERSONNEL HAVE COPIES OF INSTRUCTIONS AND PHOTOGRAPHS OF PROPERLY INSTALLED EXITS AS AN AID TO INSTALLATION.

   IF THE CONSTRUCTION EXIT IS NOT INSTALLED CORRECTLY THE FIRST TIME, IT WILL HAVE TO BE REBUILT.

2. DETERMINE THE LOCATION ON THE GROUND, TAKING INTO CONSIDERATION:

   * THE CONSTRUCTION EXIT MUST BE IN PLACE DURING ALL PHASES OF CONSTRUCTION; IF THE LOCATION IS TO BE GRADED, THE EXIT MUST BE INSTALLED FOR THE INITIAL WORK, REMOVED TO ALLOW GRADING OF THE LOCATION, AND REPLACED IMMEDIATELY AFTER GRADING SO THAT IT IS IN PLACE AND FUNCTIONING AT ALL TIMES.

   * IF THE SITE WILL HAVE A LARGE NUMBER OF VEHICLES USING THE EXIT, IT IS ADVISABLE TO HAVE A DIVIDED ENTRANCE THAT DIRECTS ENTERING TRAFFIC THROUGH A SEPARATE TRAVELWAY PARALLEL TO THE GRAVEL CONSTRUCTION EXIT IN ORDER TO REDUCE THE NUMBER OF TRIPS OVER THE STONE, INCREASING THE LIFE TO THE GRAVEL, AND REDUCING MAINTENANCE. REFER TO THE ILLUSTRATION FOR DETAILS.

   * RUNOFF AND SEDIMENT FROM THE SITE MUST BE DIRECTED AWAY FROM THE EXIT SO THAT IT DOES NOT FLOW INTO THE STREET OR OTHER OFFSITE AREA; CHOOSE A LOCATION FOR THE EXIT THAT WILL MAKE IT EASY TO DIVERT THE RUNOFF TO SEDIMENT-TRAPPING DEVICES.

   * IF THE GRAVEL CONSTRUCTION EXIT DOES NOT FUNCTION TO KEEP MUD AND DUST ON-SITE, THEN ANY SOIL OR DEBRIS TRACKED FROM THE SITE MUST BE PHYSICALLY REMOVED FROM THESE AREAS BY FIRST USING A SHOVEL AND BROOM AND THEM WASHING THE PAVEMENT.

   * IF THE PERSON RESPONSIBLE FOR THE DISTURBANCE FAILS TO TAKE INITIATIVE TO KEEP SOIL AND DEBRIS ON THE SITE ENFORCEMENT ACTION MAY BE TAKEN AGAINST THE SITE AND THE GRADING PERMIT REVOKED AND/OR A STOP WORK ORDER ISSUED.

3. CLEAR THE LOCATION OF THE EXIT, REMOVING STUMPS, ROOTS, AND OTHER VEGETATION IN ORDER TO PROVIDE A FIRM FOUNDATION SO THAT THE STONE IS NOT PRESSED INTO SOFT GROUND. CLEAR ENOUGH WIDTH TO ALLOW PASSAGE OF LARGE VEHICLES, BUT CLEAR ONLY WHAT IS NECESSARY FOR THE EXIT. DO NOT CLEAR ADJACENT AREAS UNTIL THE REQUIRED EROSION CONTROL DEVICES ARE IN PLACE.

   IF THE SOIL AT THE LOCATION IS SOFT IT IS ADVISABLE TO PLACE A 6 TO 8 INCH LAYER OF CRUSHER RUN STONE DOWN FIRST TO PROVIDE A FIRM FOUNDATION AND PREVENT THE WASHED STONE BEING PRESSED INTO THE GROUND.

4. AT THE LOCATION OF THE EXIT, PLACE AN 8-INCH LAYER OF WASHED STONE 2 TO 3 INCHES IN DIAMETER AT LEAST 50 FEET LONG AND AS WIDE AS THE FULL WIDTH OF THE EXIT OR AT LEAST 10 FEET WIDE. FLARE THE END OF THE STONE WHERE IT MEETS THE PAVEMENT SO THAT THE WHEELS OF TURNING VEHICLES REMAIN ON STONE AND DO NOT TRAVEL OVER UNPROTECTED SOIL.

5. A SQUARE-EDGED SHOVEL AND BROOM WITH STIFF BRISTLES MUST BE PROVIDED AT THE EXIT FOR REMOVING ANY MUD THAT MAY BE TRACKED INTO THE STREET.

USE

1. AS VEHICLES LEAVING THE SITE DRIVE ACROSS THE WASHED STONE THE ABRASIVE ACTION OF THE WASHED STONE SHOULD REMOVE SEDIMENT FROM THE TIRES. IT MAY BE NECESSARY TO USE A SHOVEL TO REMOVE MUD TRAPPED BETWEEN DUAL WHEELS.

2. ANY SOIL TRACKED FROM THE SITE MUST BE REMOVED IMMEDIATELY. A SHOVEL AND BROOM MUST BE USED TO REMOVE AS MUCH SOIL AS POSSIBLE BEFORE WASHING THE PAVEMENT.

MAINTENANCE

MATERIALS, EQUIPMENT, AND PERSONNEL MUST BE AVAILABLE FOR MAINTENANCE AT ALL TIMES.

1. WHEN THE STONE IN THE EXIT BECOMES CONTAMINATED WITH SOIL AND ITS FUNCTION IS REDUCED TO WHERE SEDIMENT IS BEING TRACKED INTO THE STREET, A 4-INCH LAYER OF CLEAN STONE MUST BE ADDED.

2. DIVERSIONS USED TO DIRECT RUNOFF AWAY FROM THE EXIT TO SEDIMENT-TRAPPING DEVICES MUST BE MAINTAINED ACCORDING TO SPECIFICATIONS FOR THOSE DEVICES.

3. CONTINUAL MAINTENANCE AND/OR REFRESHING OF THE STONE WILL BE REQUIRED TO PREVENT SEDIMENT FROM BEING TRACKED OFF SITE. PROBLEMS MUST BE ANTICIPATED AND THE PROPER PREVENTIVE MAINTENANCE MUST BE PERFORMED.

REMOVAL

1. WHEN THE GRAVEL CONSTRUCTION EXIT IS NO LONGER NEEDED, WHEN THE TRAVELWAYS HAVE BEEN STABILIZED AND THE POTENTIAL FOR TRACKING SOIL AND DEBRIS INTO THE STREET HAS BEEN REMOVED, THE GRAVEL CONSTRUCTION EXIT MAY BE REMOVED.

2. THE STONE AND ANY SEDIMENT SHOULD BE REMOVED AND PROPERLY DISPOSED OF WHERE THEY WILL NOT CREATE AN EROSION HAZARD.

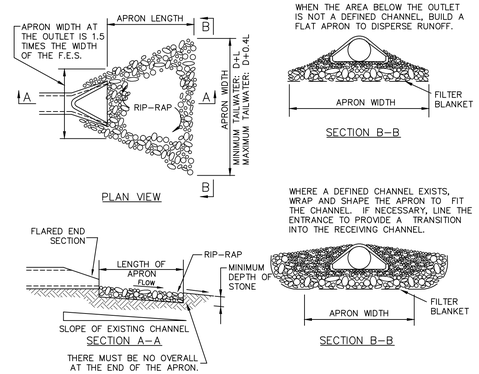


# RIP RAP APRON

NTS

INSTRUCTIONS FOR
RIP RAP APRON /
STONE APRON OUTLET PROTECTION

INSTALLATION

1. REFER TO THE PLANS FOR LOCATION, EXTENT, AND SPECIFICATIONS. IF THERE ARE QUESTIONS OR PROBLEMS WITH THE LOCATION, EXTENT, OR METHOD OF INSTALLATION, CONTACT THE ENGINEER, ARCHITECT, OR RESPONSIBLE PERSONNEL ON THE SITE FOR ASSISTANCE. EROSION CONTROL PERSONNEL HAVE COPIES OF INSTRUCTIONS AND MAY HAVE PHOTOGRAPHS OR PROPERLY INSTALLED APRONS AS A AID TO INSTALLATION.

   IF THE STONE APRON IS NOT INSTALLED CORRECTLY THE FIRST TIME, IT WILL HAVE TO BE REBUILT.

2. DETERMINE THE LOCATION ON THE GROUND TAKING INTO CONSIDERATION:

   * DECIDE HOW EQUIPMENT AND MATERIAL WILL REACH THE LOCATION TO CONSTRUCT THE APRON. DO NOT "PAINT YOURSELF INTO A CORNER" AND PLACE FILL, STRUCTURES, ETC. THAT COULD BLOCK ACCESS.

   * THE LOCATION OF THE APRON MUST BE SOLID GROUND. IT MAY BE NECESSARY TO EXCAVATE THE LOCATION TO REMOVE MUD AND THEN BACKFILL WITH GOOD MATERIAL. THIS IS NECESSARY SO THE STONE DOES NOT DISAPPEAR INTO THE MUD, WHICH WOULD REQUIRE MUCH MORE STONE TO COMPLETE THE APRON AND MAKE INSTALLATION DIFFICULT.

3. CLEAR THE LOCATION OF THE APRON. LEAVE AS MUCH OF THE EXISTING VEGETATION AS POSSIBLE AROUND THE LOCATION TO HOLD THE SOIL IN PLACE AND REDUCE THE AREA THAT WILL HAVE TO BE STABILIZED AFTERWARD.

4. EXCAVATE THE BOTTOM TO THE REQUIRED DEPTH TO ACCEPT THE STONE AND THE FILTER BLANKET. WHEN FINISHED, THE BOTTOM OF THE APRON MUST BE LEVEL WITH THE BOTTOM OF THE CHANNEL; THERE CANNOT BE AN OVERALL AT THE END OF THE APRON.

5. PLACE THE FILTER BLANKET, AS SPECIFIED IN THE PLAN, OVER THE LOCATION AND UNDER THE LIP OF THE FLARED END SECTION.

6. PLACE THE SPECIFIED STONE TO THE REQUIRED DIMENSIONS AND SHAPE IT TO THE CONFIGURATION SHOWN IN THE PLAN.

7. STABILIZE THE AREA AROUND THE APRON THAT WAS DISTURBED DURING CONSTRUCTION. USE ADDITIONAL STONE OR VEGETATION, WHICHEVER IS APPROPRIATE FOR THE SITUATION.

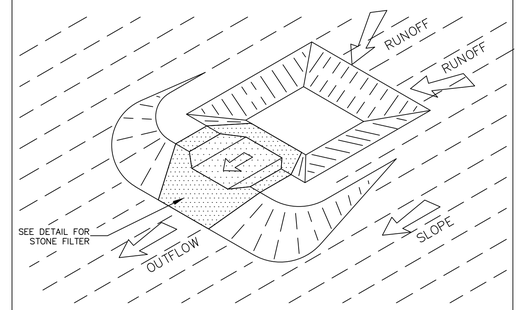


ISOMETRIC VIEW OF TYPE-B SEDIMENT TRAP

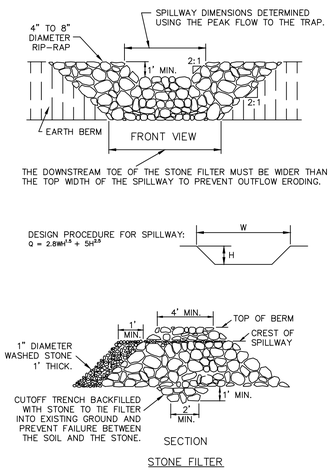


STONE FILTER

# TYPE-B SEDIMENT TRAP

NTS

INSTRUCTIONS FOR
TYPE-B SEDIMENT TRAP

INSTALLATION

1. REFER TO THE PLANS FOR LOCATION, DIMENSIONS, AND SPECIFICATIONS. IF THERE ARE QUESTIONS OR PROBLEMS WITH THE LOCATION, EXTENT, OR METHODS OF INSTALLATION, CONTACT THE ENGINEER, ARCHITECT, OR RESPONSIBLE PERSONNEL ON THE SITE FOR ASSISTANCE. EROSION CONTROL PERSONNEL HAVE COPIES OF INSTRUCTIONS AND MAY HAVE PHOTOGRAPHS OF PROPERLY INSTALLED SEDIMENT TRAPS AS AN AID TO INSTALLATION.

   IF THE SEDIMENT TRAP IS NOT INSTALLED CORRECTLY THE FIRST TIME, IT WILL HAVE TO BE REBUILT.

2. DETERMINE THE LOCATION ON THE GROUND, TAKING INTO CONSIDERATION:

   * ALLOW SUFFICIENT SPACE FOR THE PIT AND BERM TO BE BUILT TO THE SPECIFIED DIMENSIONS.

   * ALLOW ACCESS TO THE TRAP WHEN IT IS FINISHED TO MAINTAIN AND REMOVE IT, TAKING INTO ACCOUNT FINISHED GRADES, FILL SLOPES, BUILDINGS, UTILITIES, ETC.

   * ALLOW AT LEAST:

   15 FEET BETWEEN THE SEDIMENT TRAP AND SINGLE-STORY BUILDINGS.

   25 FEET FOR FORK LIFTS BETWEEN THE SEDIMENT TRAP AND MULTIPLE-STORY BUILDINGS.

   15 FEET BETWEEN THE SEDIMENT TRAP AND THE TOE OF FILL SLOPES.

   * MAKE SURE RUNOFF FROM THE DISTURBED AREAS ABOVE THE TRAP WILL FLOW INTO AND THROUGH THE SEDIMENT TRAP AND NOT BY-PASS IT. PLACE THE TRAP WHERE DIVERSIONS, SILT FENCE, ETC. CAN DIRECT RUNOFF TO THE TRAP LOCATION.

3. CLEAR THE LOCATION OF THE TRAP, REMOVING TOP SOIL, STUMPS, ROOTS, LARGE ROCKS, AND OTHER OBJECTIONABLE MATERIAL.

4. EXCAVATE THE PIT AS NECESSARY TO CREATE THE REQUIRED VOLUME. KEEP IN MIND:

   * POSITIVE DRAINAGE OUT OF THE PIT MUST BE MAINTAINED TO KEEP STANDING WATER TO A MINIMUM AND ALLOW ACCUMULATED SEDIMENT TO DRY OUT.

   * MAXIMUM 2.5:1 SLOPES ON CUT AND FILL SLOPES, EXCEPT THE OUTLET SIDE, WHICH MUST BE 3:1 OR FLATTER.

5. WHERE THE TRAP IS BEING BUILT ON A SLOPE, FILL AND COMPACT THE EARTH BERM USING GOOD SOIL THAT IS FREE OF VEGETATION AND ROOTS.

   DO NOT USE TOPSOIL, MUD, STUMPS, ETC. FROM THE EXCAVATION IN THE BERM.

6. WHERE THE TRAP IS BEING BUILT ACROSS A SLOPE, CUT OUT A NOTCH IN THE EARTH BERM LARGE ENOUGH TO ACCOMMODATE THE REQUIRED LENGTH OF THE STONE FILTER OUTLET.

7. EXCAVATE A CUTOFF TRENCH IN THE BOTTOM AND SIDES OF THE BERM OR STREAM CHANNEL TO HOLD THE FILTER IN PLACE. REFER TO THE ILLUSTRATION.

8. PLACE RIPRAP IN THE NOTCH OF THE EARTH BERM OR ACROSS THE CHANNEL, SHAPING THE STONE INTO THE OUTLET AS SHOWN IN THE ILLUSTRATION AND TO THE REQUIRED WIDTH. PLACE STONE SO THAT SOIL IN THE EARTH BERM AND BELOW THE OUTLET IS PROTECTED FROM EROSION BY OUTFLOW.

9. PLACE A 1-FOOT LAYER OF 1-INCH DIAMETER WASHED STONE ON THE UPSTREAM FACE OF THE RIPRAP TO CREATE THE FILTER.

10. INSTALL THE BAFFLES AS SPECIFIED IN THE PLAN. REFER TO THE ILLUSTRATIONS AND INSTRUCTIONS FOR BAFFLES. INSTALL THE 4-INCH STAKE IN THE CENTER OF THE PIT SHOWING THE TOP OF THE SEDIMENT STORAGE VOLUME.

11. SEED AND MULCH THE SEDIMENT TRAP AND DISTURBED AREAS AROUND IT DURING SPRING, SUMMER, AND FALL. IN WINTER, COVER THESE AREAS WITH A HEAVY LAYER OF STRAW MULCH.

MAINTENANCE

MATERIALS, EQUIPMENT, AND PERSONNEL MUST BE AVAILABLE FOR MAINTENANCE AT ALL TIMES.

1. INSPECT THE SEDIMENT TRAP:

   * DURING CONSTRUCTION: TO SEE IF THE TRAP HAS BEEN DAMAGED BY EQUIPMENT, GRADING ETC. OR PARTIALLY FILLED BY GRADING. IF DAMAGED, REPAIR IT. IF THE VOLUME IS REDUCED, REMOVE THE FILL.

   * AFTER EACH RAINFALL: TO SEE HOW MUCH SEDIMENT HAS ACCUMULATED, IF THE STONE FILTER HAS BECOME COVERED OR CLOGGED WITH SEDIMENT, IF THE OUTLET IS ERODED, OR IF RUNOFF IS BY-PASSING THE TRAP. IF THE OUTLET IS ERODED OR RUNOFF IS BY-PASSING THE TRAP, MAKE THE NECESSARY REPAIRS AND CHANGES. INSPECT THE BAFFLES AND REPAIR THEM IF DAMAGED.

2. CLEAN OUT THE PIT WHEN SEDIMENT HAS ACCUMULATED TO THE TOP OF THE SEDIMENT STORAGE VOLUME AS INDICATED BY THE TOP OF THE 4-INCH STAKE IN THE MIDDLE OF THE TRAP. REMOVE THE SEDIMENT AND PLACE IT IN A DISPOSAL AREA OR, IF APPROPRIATE, MIX IT WITH DRY SOIL ON THE SITE. DO NOT DISPOSE OF SEDIMENT IN A MANNER THAT WILL CREATE AN EROSION HAZARD.

3. WHEN THE WASHED STONE ON THE FILTER BERM BECOMES COVERED WITH SEDIMENT SO THAT WATER CANNOT FLOW THROUGH THE FILTER, SCRAPE THE CONTAMINATED STONE OFF, DISPOSE OF IT PROPERLY, AND REPLACE IT WITH A 1-FOOT LAYER OF CLEAN WASHED STONE.

4. MAINTAIN DRAINAGE TO THE SEDIMENT TRAP SO THAT RUNOFF DOES NOT BY-PASS IT. MAINTAIN ALL DIVERSIONS AND SILT FENCE DIRECTING RUNOFF TO THE TRAP ACCORDING TO REQUIREMENTS FOR THOSE PRACTICES.

REMOVAL

1. WHEN THE PROJECT IS COMPLETE AND THE DRAINAGE AREA ABOVE THE TRAP IS STABILIZED, THE SEDIMENT TRAP MUST BE REMOVED.

2. REMOVE THE ACCUMULATED SEDIMENT, EARTH BERMS, AND STONE, THEN GRADE THE AREA. DISPOSE OF THE SEDIMENT AND TRAP COMPONENTS PROPERLY.

3. STABILIZE THE DISTURBED AREA WITH VEGETATION OR STONE, AS SPECIFIED IN THE PLAN.

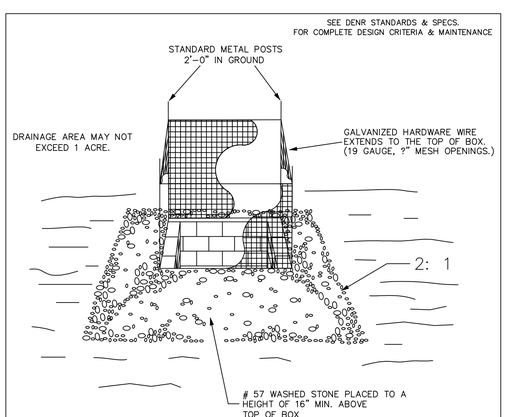


# STANDARD CATCH BASIN/YARD INLET PROTECTION

PROTECTION OF EXISTING VEGETATION:

AT THE START OF GRADING INVOLVING THE LOWERING OF EXISTING GRADE AROUND A TREE OR STRIPPING OF TOPSOIL, A CLEAN, SHARP, VERTICAL CUT SHALL BE MADE AT THE EDGE OF THE TREE SAVE AREA AT THE SAME TIME AS OTHER EROSION CONTROL MEASURES ARE INSTALLED. THE TREE PROTECTION FENCING SHALL BE INSTALLED ON THE SIDE OF THE CUT FARTHEST AWAY FROM THE TREE TRUNK AND SHALL REMAIN IN PLACE UNTIL ALL CONSTRUCTION IN THE VICINITY OF THE TREE IS COMPLETE. NO STORAGE OF MATERIALS, FILL, OR EQUIPMENT AND NO TRESPASSING SHALL BE ALLOWED WITHIN THE BOUNDARY OF THE PROTECTED AREA.

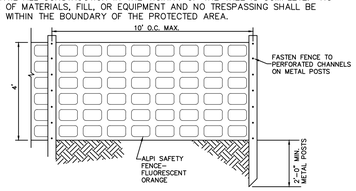


# TREE PROTECTION FENCE DETAIL

NTS

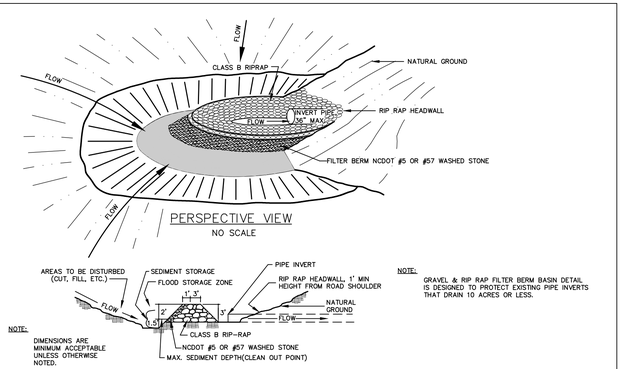


SECTION THRU BASIN, FILTER AND CULVERT PIPE

NO SCALE

(EXISTING PIPE INVERTS)

# ROCK PIPE INLET PROTECTION

STD. No. 6.55.2

EarthCentric Engineering, Inc.
Licence # C-2638
204 W. Clay Street
Mebane, NC 27302
Phone: (919) 563-9041
Fax: (919) 304-3234
E-Mail: Phil.Koch@EarthCentric.com

PRINCIPAL ENGINEER
PHIL KOCH - NCPE #22634

HENDERSON WOODS
ORANGE COUNTY, NORTH CAROLINA

EROSION CONTROL

| REV. | DATE | DESCRIPTION | BY |
|---|---|---|---|
| 1 | 09/09/2015 | ORANGE CO. COMMENTS | TMM |
| 2 | 09/16/2015 | SOLID WASTE COMMENTS | SCS |
| 3 | 11/18/2015 | WETLANDS DELINEATION | TMM |

| | |
|---|---|
| DATE: | JULY 1, 2015 |
| HORIZONTAL SCALE: | N/A |
| VERTICAL SCALE: | N/A |
| PROJECT MANAGER: | CPK |
| DRAWN BY: | SCS |
| PROJECT NO: | 14-044 |
| DRAWING NAME: | 14-044 DETAILS |

THIS DRAWING AND THE DESIGN HEREON ARE THE PROPERTY OF EarthCentric Engineering, Inc. THE INFORMATION ON THIS DRAWING IS NOT FOR USE ON ANY OTHER SITE OR PROJECT. THE REPRODUCTION OR OTHER USE OF THIS DRAWING IN WHOLE OR IN PART, WITHOUT WRITTEN CONSENT OF EarthCentric Engineering, Inc., IS PROHIBITED.

COPYRIGHT 2015 EarthCentric Engineering, Inc.

SHEET NO.

D1.1

PRELIMINARY

PIN# 9891-80-0707 & 9891-60-4884

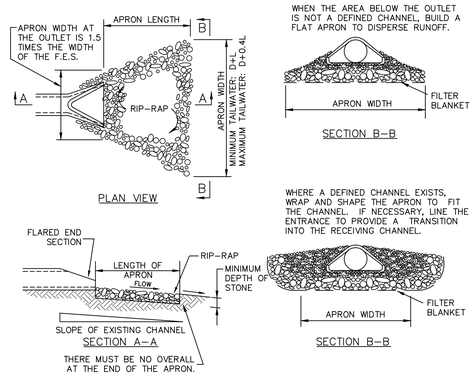


# RIP RAP APRON

NTS

INSTRUCTIONS FOR
RIP RAP APRON /
STONE APRON OUTLET PROTECTION

INSTALLATION

1. REFER TO THE PLANS FOR LOCATION, EXTENT, AND SPECIFICATIONS. IF THERE ARE QUESTIONS OR PROBLEMS WITH THE LOCATION, EXTENT, OR METHOD OF INSTALLATION, CONTACT THE ENGINEER, ARCHITECT, OR RESPONSIBLE PERSONNEL ON THE SITE FOR ASSISTANCE. EROSION CONTROL PERSONNEL HAVE COPIES OF INSTRUCTIONS AND MAY HAVE PHOTOGRAPHS OR PROPERLY INSTALLED APRONS AS A AID TO INSTALLATION.

   IF THE STONE APRON IS NOT INSTALLED CORRECTLY THE FIRST TIME, IT WILL HAVE TO BE REBUILT.

2. DETERMINE THE LOCATION ON THE GROUND TAKING INTO CONSIDERATION:

   * DECIDE HOW EQUIPMENT AND MATERIAL WILL REACH THE LOCATION TO CONSTRUCT THE APRON. DO NOT "PAINT YOURSELF INTO A CORNER" AND PLACE FILL, STRUCTURES, ETC. THAT COULD BLOCK ACCESS.

   * THE LOCATION OF THE APRON MUST BE SOLID GROUND. IT MAY BE NECESSARY TO EXCAVATE THE LOCATION TO REMOVE MUD AND THEN BACKFILL WITH GOOD MATERIAL. THIS IS NECESSARY SO THE STONE DOES NOT DISAPPEAR INTO THE MUD, WHICH WOULD REQUIRE MUCH MORE STONE TO COMPLETE THE APRON AND MAKE INSTALLATION DIFFICULT.

3. CLEAR THE LOCATION OF THE APRON. LEAVE AS MUCH OF THE EXISTING VEGETATION AS POSSIBLE AROUND THE LOCATION TO HOLD THE SOIL IN PLACE AND REDUCE THE AREA THAT WILL HAVE TO BE STABILIZED AFTERWARD.

4. EXCAVATE THE BOTTOM TO THE REQUIRED DEPTH TO ACCEPT THE STONE AND THE FILTER BLANKET. WHEN FINISHED, THE BOTTOM OF THE APRON MUST BE LEVEL WITH THE BOTTOM OF THE CHANNEL; THERE CANNOT BE AN OVERALL AT THE END OF THE APRON.

5. PLACE THE FILTER BLANKET, AS SPECIFIED IN THE PLAN, OVER THE LOCATION AND UNDER THE LIP OF THE FLARED END SECTION.

6. PLACE THE SPECIFIED STONE TO THE REQUIRED DIMENSIONS AND SHAPE IT TO THE CONFIGURATION SHOWN IN THE PLAN.

7. STABILIZE THE AREA AROUND THE APRON THAT WAS DISTURBED DURING CONSTRUCTION. USE ADDITIONAL STONE OR VEGETATION, WHICHEVER IS APPROPRIATE FOR THE SITUATION.

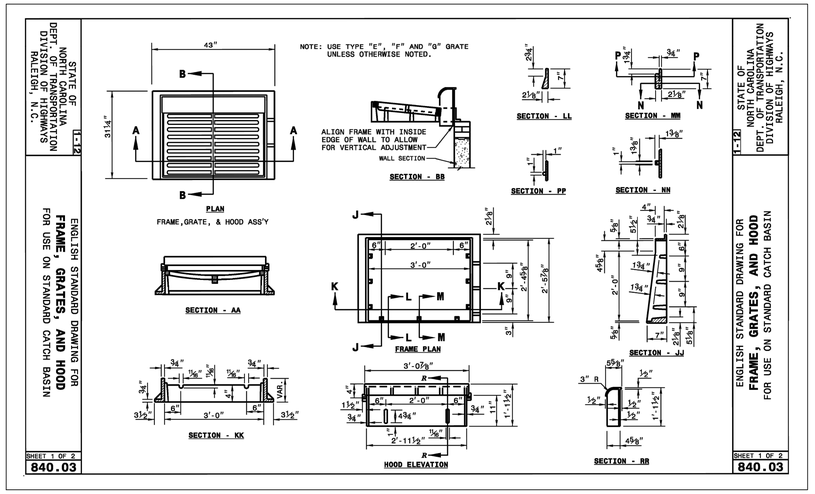


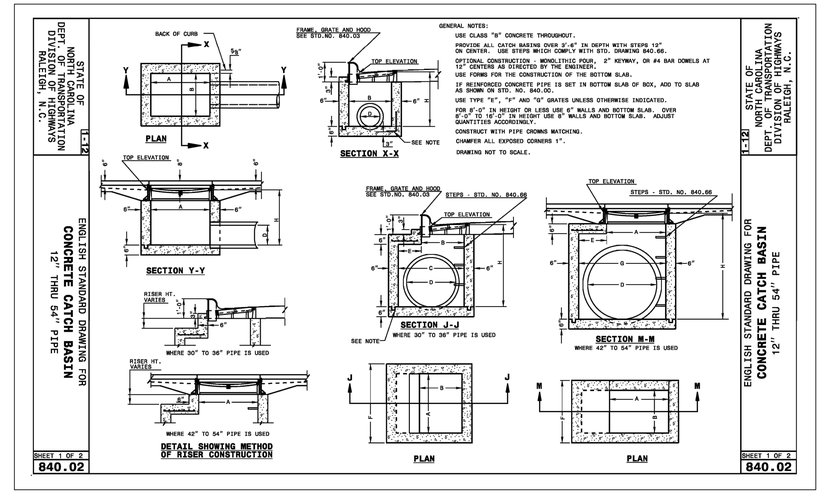


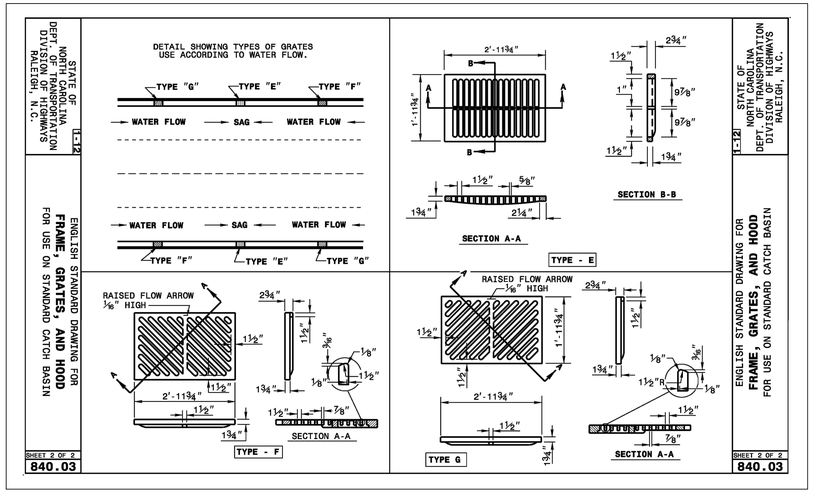


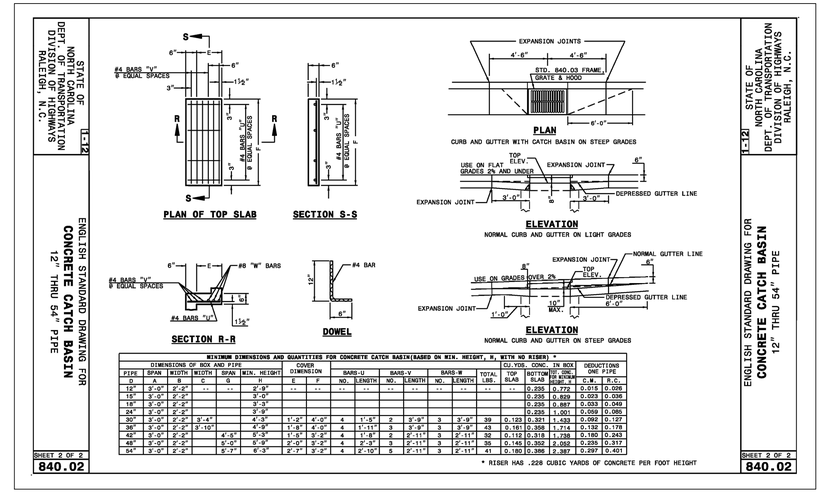


MINIMUM DIMENSIONS AND QUANTITIES FOR CONCRETE CATCH BASIN(BASED ON MIN. HEIGHT, H, WITH NO RISER) *

| DIMENSIONS OF BOX AND PIPE | | | | | | COVER DIMENSION | | BARS-U | | BARS-V | | BARS-W | | TOTAL LBS. | CU.YDS. CONC. IN BOX (TOP SLAB, BOTTOM SLAB & WALLS) | | DEDUCTIONS ONE PIPE | |
|---|---|---|---|---|---|---|---|---|---|---|---|---|---|---|---|---|---|---|
| PIPE D | SPAN A | WIDTH B | WIDTH C | SPAN G | MIN. HEIGHT H | E | F | NO. | LENGTH | NO. | LENGTH | NO. | LENGTH | | TOP SLAB | BOTTOM SLAB | C.Y. | R.C. |
| 12" | 3'-0" | 2'-2" | -- | -- | 2'-9" | -- | -- | -- | -- | -- | -- | -- | -- | -- | 0.235 | 0.772 | 0.015 | 0.026 |
| 15" | 3'-0" | 2'-2" | | | 3'-0" | | | | | | | | | | 0.235 | 0.829 | 0.033 | 0.036 |
| 18" | 3'-0" | 2'-2" | | | 3'-3" | | | | | | | | | | 0.235 | 0.887 | 0.033 | 0.049 |
| 24" | 3'-0" | 2'-2" | | | 3'-9" | | | | | | | | | | 0.235 | 1.001 | 0.059 | 0.086 |
| 30" | 3'-0" | 2'-2" | 3'-4" | | 4'-3" | 1'-2" | 4'-0" | 4 | 1'-5" | 2 | 3'-9" | 3 | 3'-9" | 39 | 0.321 | 1.433 | 0.092 | 0.127 |
| 36" | 3'-0" | 2'-2" | 3'-10" | | 4'-9" | 1'-8" | 4'-0" | 4 | 1'-11" | 3 | 3'-9" | 3 | 3'-9" | 43 | 0.161 | 0.358 | 1.714 | 0.132 | 0.178 |
| 42" | 3'-0" | 2'-2" | | 4'-6" | 5'-3" | 1'-8" | 3'-3" | 4 | 1'-8" | 2 | 2'-11" | 3 | 2'-11" | 32 | 0.112 | 0.318 | 1.788 | 0.160 | 0.243 |
| 48" | 3'-0" | 2'-2" | | 5'-0" | 5'-9" | 2'-0" | 3'-3" | 4 | 2'-3" | 3 | 2'-11" | 3 | 2'-11" | 35 | 0.145 | 0.352 | 2.052 | 0.235 | 0.317 |
| 54" | 3'-0" | 2'-2" | | 5'-7" | 6'-3" | 2'-7" | 3'-3" | 4 | 2'-10" | 3 | 2'-11" | 3 | 2'-11" | 41 | 0.180 | 0.386 | 2.387 | 0.297 | 0.401 |

* RISER HAS .228 CUBIC YARDS OF CONCRETE PER FOOT HEIGHT

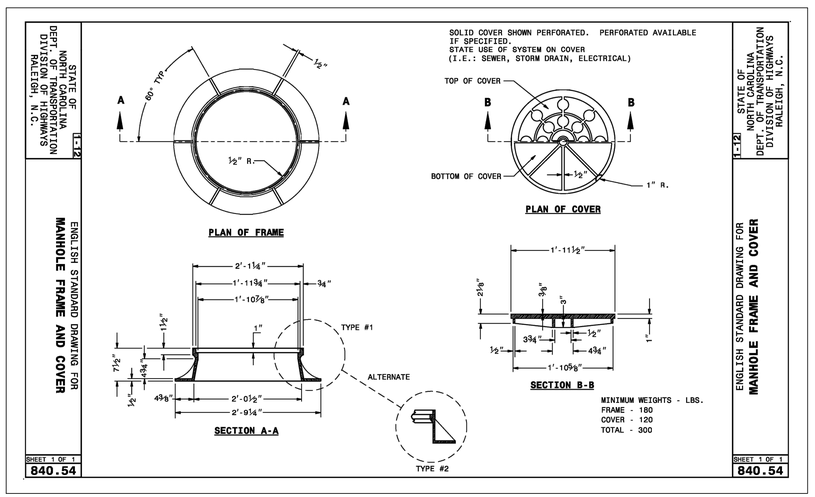


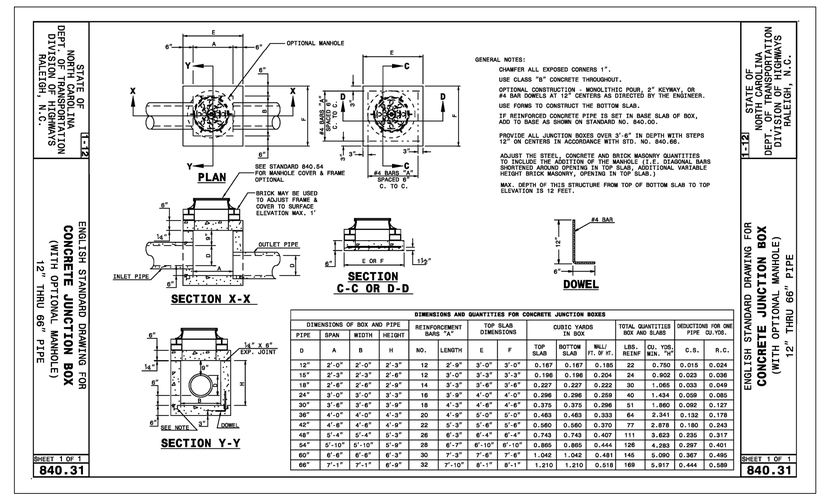


DIMENSIONS AND QUANTITIES FOR CONCRETE JUNCTION BOXES

| DIMENSIONS OF BOX AND PIPE | | | | REINFORCEMENT BARS "A" | | TOP SLAB DIMENSIONS | | CUBIC YARDS IN BOX | | | TOTAL QUANTITIES BOX AND SLABS | | DEDUCTIONS FOR ONE PIPE CU.YDS. | | |
|---|---|---|---|---|---|---|---|---|---|---|---|---|---|---|---|
| PIPE D | SPAN A | WIDTH B | HEIGHT H | NO. | LENGTH | E | F | TOP SLAB | BOTTOM SLAB | WALL FT. OF H. | LBS. REINF | CU. YDS. CONC. "W" | C.S. | R.C. |
| 12" | 2'-0" | 2'-0" | 2'-3" | 12 | 2'-9" | 3'-0" | 3'-0" | 0.167 | 0.167 | 0.185 | 22 | 0.750 | 0.015 | 0.024 |
| 15" | 2'-3" | 2'-3" | 2'-6" | 12 | 3'-0" | 3'-3" | 3'-3" | 0.196 | 0.196 | 0.204 | 24 | 0.902 | 0.023 | 0.036 |
| 18" | 2'-6" | 2'-6" | 2'-9" | 14 | 3'-3" | 3'-6" | 3'-6" | 0.227 | 0.227 | 0.222 | 30 | 1.065 | 0.033 | 0.049 |
| 24" | 3'-0" | 3'-0" | 3'-3" | 18 | 3'-8" | 4'-0" | 4'-0" | 0.296 | 0.296 | 0.259 | 40 | 1.434 | 0.059 | 0.085 |
| 30" | 3'-6" | 3'-6" | 3'-9" | 18 | 4'-3" | 4'-6" | 4'-6" | 0.375 | 0.375 | 0.296 | 51 | 1.860 | 0.092 | 0.127 |
| 36" | 4'-0" | 4'-0" | 4'-3" | 20 | 4'-9" | 5'-0" | 5'-0" | 0.463 | 0.463 | 0.333 | 64 | 2.341 | 0.132 | 0.178 |
| 42" | 4'-6" | 4'-6" | 4'-9" | 22 | 5'-3" | 5'-6" | 5'-6" | 0.560 | 0.560 | 0.370 | 77 | 2.878 | 0.180 | 0.243 |
| 48" | 5'-4" | 5'-4" | 5'-3" | 26 | 6'-3" | 6'-4" | 6'-4" | 0.743 | 0.743 | 0.407 | 111 | 3.623 | 0.235 | 0.317 |
| 54" | 5'-10" | 5'-10" | 5'-9" | 28 | 6'-7" | 6'-10" | 6'-10" | 0.865 | 0.865 | 0.444 | 128 | 4.283 | 0.297 | 0.401 |
| 60" | 6'-6" | 6'-6" | 6'-3" | 30 | 7'-3" | 7'-6" | 7'-6" | 1.042 | 1.042 | 0.481 | 145 | 5.090 | 0.367 | 0.495 |
| 66" | 7'-1" | 7'-1" | 6'-9" | 32 | 7'-10" | 8'-1" | 8'-1" | 1.210 | 1.210 | 0.518 | 169 | 5.917 | 0.444 | 0.599 |


EarthCentric Engineering, Inc.
Licence # C-2638
204 W. Clay Street
Mebane, NC 27302
Phone: (919) 563-9041
Fax: (919) 304-3234
E-Mail: Phil.Koch@EarthCentric.com


PRINCIPAL ENGINEER
PHIL KOCH - NCPE #22634

HENDERSON WOODS
ORANGE COUNTY, NORTH CAROLINA

STORMWATER DETAILS

| REV. | DATE | DESCRIPTION | BY |
|---|---|---|---|
| 1 | 09/09/2015 | ORANGE CO. COMMENTS | TMM |
| 2 | 09/16/2015 | SOLID WASTE COMMENTS | SCS |
| 3 | 11/18/2015 | WETLANDS DELINEATION | TMM |

| | |
|---|---|
| DATE: | JULY 1, 2015 |
| HORIZONTAL SCALE: | N/A |
| VERTICAL SCALE: | N/A |
| PROJECT MANAGER: | CPK |
| DRAWN BY: | SCS |
| PROJECT NO: | 14-044 |
| DRAWING NAME: | 14-044 DETAILS |


THIS DRAWING AND THE DESIGN HEREON ARE THE PROPERTY OF EarthCentric Engineering, Inc. THE INFORMATION ON THIS DRAWING IS NOT FOR USE ON ANY OTHER SITE OR PROJECT. THE REPRODUCTION OR OTHER USE OF THIS DRAWING IN WHOLE OR IN PART, WITHOUT WRITTEN CONSENT OF EarthCentric Engineering, Inc., IS PROHIBITED.

COPYRIGHT 2015 EarthCentric Engineering, Inc.


SHEET NO.

D2.0

PRELIMINARY

DUKE ENERGY.

Outdoor Lighting

## Sanibel LED

The beauty of the stylish Sanibel LED is its remarkable versatility. Its sleek simplicity, with a gently curved bracket that helps cast light downward, is at home virtually anywhere – from more formal traditional neighborhoods to beachfront communities and other casual locales.

| | |
|---|---|
| LED *(Light Emitting Diode)* | 70 watts |
| Mounting heights | 15', 20' |
| Colors | Black<br>Green |
| Poles | Style A, C |

For additional information, visit
**duke-energy.com/OutdoorLighting**
or call us toll free:
**800.544.6900** (OH and KY)
**800.521.2232** (IN)

DUKE ENERGY.

Outdoor Lighting

## Sanibel LED

**Light source:** LED *(white)*
**Wattage:** 70
**Lumens:** 5,500
**Light pattern:** IESNA Type III *(oval)*
**IESNA cutoff classification:** Full-cutoff
**Color temperature:** 4,000K

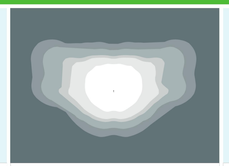

*light distribution pattern*

### Pole available:

| *Name* | *Mounting height* | *Color* |
|---|---|---|
| Aluminum | 15', 20' | Black<br>Green |

| Features | Benefits |
|---|---|
| No installation cost | Frees up capital for other projects |
| Design services by lighting professionals included | Meets industry standards and lighting ordinances |
| Maintenance included | Eliminates high and unexpected repair bills |
| Electricity included | Less expensive than metered service |
| Warranty included | Worry-free |
| One low monthly cost on your electric bill | Convenience and savings for you |
| Turnkey operation | Provides hassle-free installation and service |
| Backed by over 40 years of experience | A name you can trust today ... and tomorrow |

©2014 Duke Energy Corporation 140762 4/14

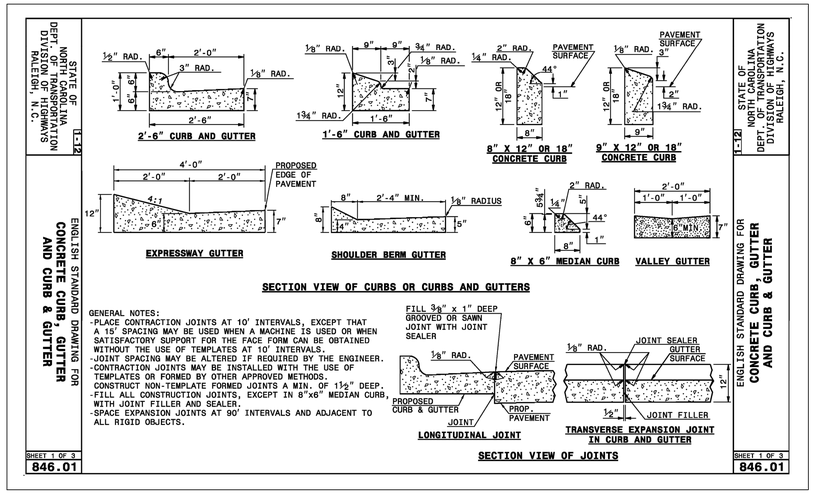


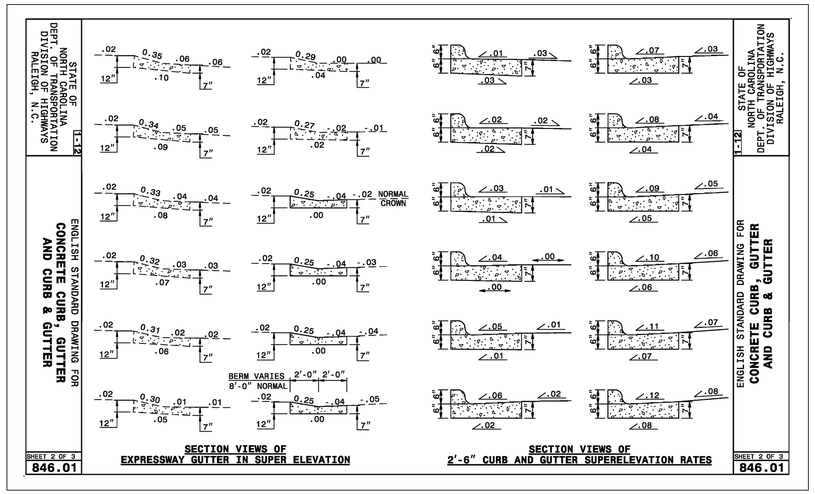


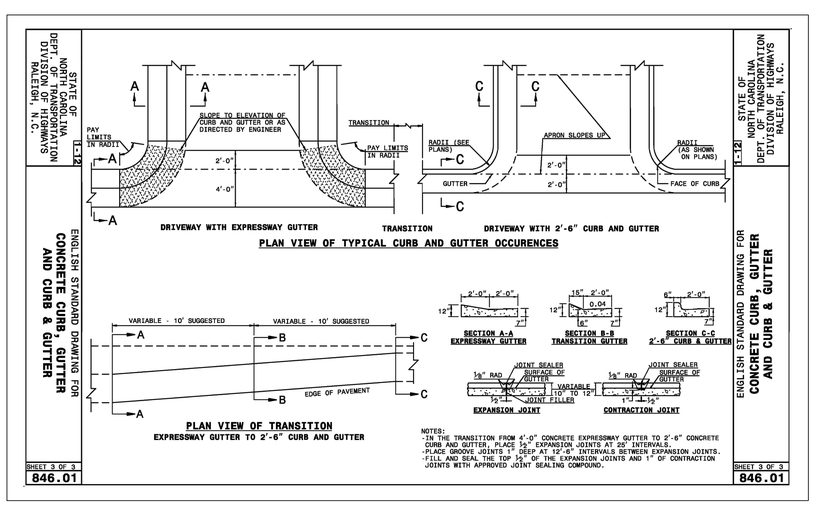


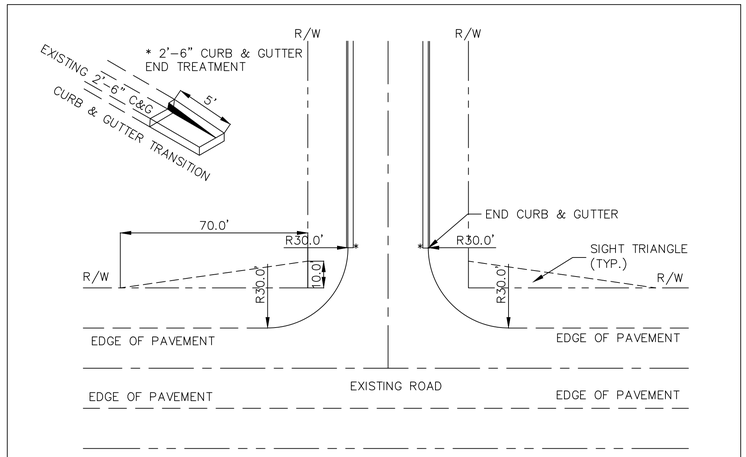


NOTE: DRAINAGE EASEMENTS MAY BE REQUIRED TO ACCOMODATE DRAINAGE BEYOND THE RIGHT-OF-WAY.

FIGURE 3

RECOMMENDED ROAD CONNECTION TO STATE MAINTAINED SYSTEM

NEW RESIDENTIAL LOCAL ROAD OR RESIDENTIAL COLLECTOR ROAD WITH CURB & GUTTER AND EXISTING STATE MAINTAINED ROAD WITH SHOULDER SECTION

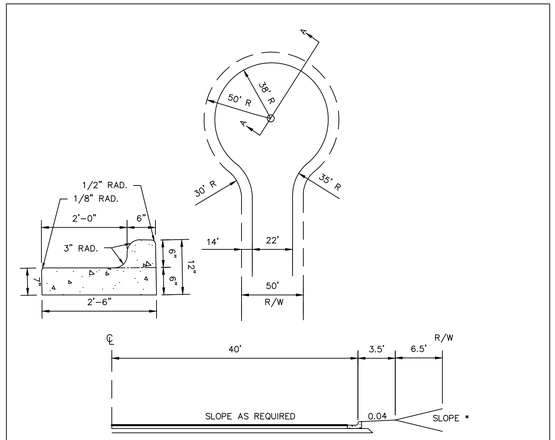


FIGURE 7 (MOD.)
SYMMETRICAL CUL-DE-SAC
CURB & GUTTER

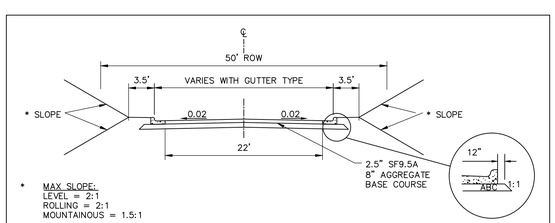


RESIDENTIAL LOCAL ROAD
TYPICAL CURB & GUTTER SECTION (MOD.)
SCALE: 1"=10'

EarthCentric Engineering, Inc.
Licence # C-2638
204 W. Clay Street
Mebane, NC 27302
Phone: (919) 563-9041
Fax: (919) 304-3234
E-Mail: Phil.Koch@EarthCentric.com

PRINCIPAL ENGINEER
PHIL KOCH - NCPE #22834

# HENDERSON WOODS
ORANGE COUNTY, NORTH CAROLINA

## SITE, PAVING & LIGHTING DETAILS

| REV. | DATE | DESCRIPTION | BY |
|---|---|---|---|
| 1 | 09/09/2015 | ORANGE CO. COMMENTS | TMM |
| 2 | 09/16/2015 | SOLID WASTE COMMENTS | SCS |
| 3 | 11/18/2015 | WETLANDS DELINEATION | TMM |

| | |
|---|---|
| DATE: | JULY 1, 2015 |
| HORIZONTAL SCALE: | N/A |
| VERTICAL SCALE: | N/A |
| PROJECT MANAGER: | CPK |
| DRAWN BY: | SCS |
| PROJECT NO: | 14-044 |
| DRAWING NAME: | 14-044 DETAILS |

THIS DRAWING AND THE DESIGN HEREON ARE THE PROPERTY OF EarthCentric Engineering, Inc. THE INFORMATION ON THIS DRAWING IS NOT FOR USE ON ANY OTHER SITE OR PROJECT. THE REPRODUCTION OR OTHER USE OF THIS DRAWING IN WHOLE OR IN PART, WITHOUT WRITTEN CONSENT OF EarthCentric Engineering, Inc., IS PROHIBITED.

COPYRIGHT 2015 EarthCentric Engineering, Inc.

SHEET NO.

D4.0

PRELIMINARY

PIN# 9891-80-0707 & 9891-60-4884

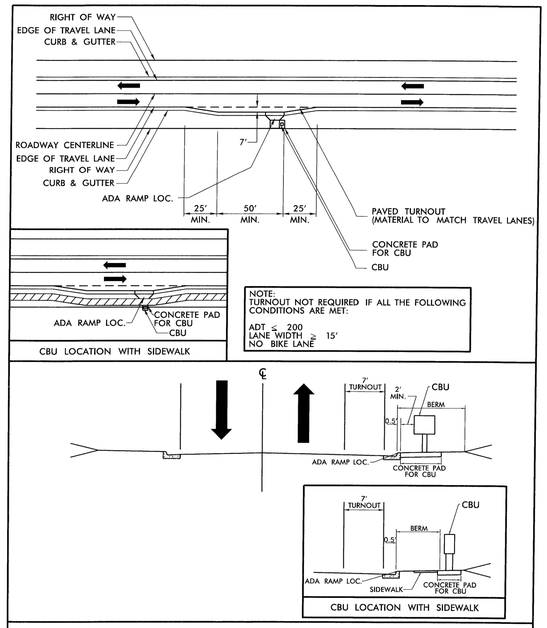


FIGURE 2
CBU PLACEMENT FOR C & G SECTION RESIDENTIAL LOCAL AND COLLECTOR SUBDIVISION STREETS

Catalog - Cluster Box Units Type 1 (CBU) Front Loading, 8 Tenant Door... http://www.nationalmailboxes2.com/catalog_i6693316.html?catId=276493

NATIONAL MAILBOXES
A DIVISION OF NMHP, INC.
NORTH AMERICA'S COMMERCIAL & RESIDENTIAL MAILBOX LEADER!
Call Today! 1-800-676-5161
WHOLESALE PRICING!

HOME | ABOUT US | ORDER HERE | CART | Link To Main Site

Search

Cluster Box Units Type 1 (CBU) Front Loading, 8 Tenant Doors - H1570-8AF

Item Id: 6693316
Colors : Sandstone - Stock Color
Select Use : For USPS Use/Access (Post Office Installs Postal Master Lock)
Qty : 1
Add Item

[ enlarge ]

[ enlarge ]

**FREE SHIPPING THIS MONTH - PROMOTION EXPIRES MONTH END**
Type 1 CBU Front Loading 8 Tenant Doors
plus Two Parcel Lockers, One Outgoing Mail Compartment and Pedestal;
Door size: 12-7/8" W x 3-1/4" H x 17-7/8" D;
Parcel Lockers:
(1) 12-7/8" W x 13-3/4" H x 17-7/8" D;
(1) 12-7/8" W x 10-1/4" H x 17-7/8" D
Unit Size: 30-1/2" W x 62" H (installed height) x 17-7/8" D
Pedestal Height: 28-1/2" H
(Price includes pedestal)
**WHOLESALE PRICE:** Qty 1-2 $1067.50; Qty 3+ Call

1 of 1 10/29/2015 11:30 AM

Catalog - Cluster Box Units Type 2 (CBU) Front Loading, 12 Tenant Doo... http://www.nationalmailboxes2.com/catalog_i6693324.html?catId=276493

NATIONAL MAILBOXES
A DIVISION OF NMHP, INC.
NORTH AMERICA'S COMMERCIAL & RESIDENTIAL MAILBOX LEADER!
Call Today! 1-800-676-5161
WHOLESALE PRICING!

HOME | ABOUT US | ORDER HERE | CART | Link To Main Site

Search

Cluster Box Units Type 2 (CBU) Front Loading, 12 Tenant Doors - H1570-12AF

Item Id: 6693324
Colors : Sandstone - Stock Color
Select Use : For USPS Use/Access (Post Office Installs Postal Master Lock)
Qty : 1
Add Item

[ enlarge ]

[ enlarge ]

**FREE SHIPPING THIS MONTH - PROMOTION EXPIRES MONTH END**
Type 2 CBU Front Loading 12 Tenant Doors
plus One Parcel Locker, One Outgoing Mail Compartment and Pedestal;
Door size: 12-7/8" W x 3-1/4" H x 17-7/8" D;
Parcel Locker: 12-7/8" W x 10-1/4" H x 17-7/8" D
Unit Size: 30-1/2" W x 62" H (installed height) x 17-7/8" D
Pedestal Height: 28-1/2" H
(Price includes pedestal)
**WHOLESALE PRICE:** Qty 1-2 $1088.50; Qty 3+ Call

1 of 1 10/29/2015 11:33 AM

STATE OF NORTH CAROLINA
DEPT. OF TRANSPORTATION
DIVISION OF HIGHWAYS
RALEIGH, N.C.

1-12

ENGLISH STANDARD DRAWING FOR
**CURB RAMP**
PROPOSED CURB AND GUTTER

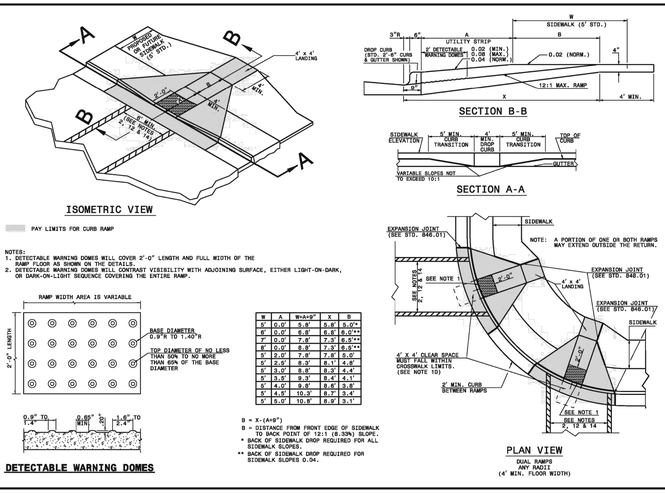


| W | A | W+A+9" | X | B |
|---|---|---|---|---|
| 5' 0.0" | 5.8' | 5.8' | 5.0'* | |
| 6' 0.0" | 6.8' | 6.8' | 6.0'** | |
| 7' 0.0" | 7.8' | 7.3' | 6.9'** | |
| 8' 0.0" | 8.8' | 7.3' | 8.9'** | |
| 9' 0.0" | 7.8' | 7.8' | 8.0' | |
| 5' 2.0" | 8.3' | 8.1' | 4.8' | |
| 6' 0.0" | 8.8' | 8.3' | 4.4' | |
| 8' 3.0" | 9.3' | 8.4' | 4.1' | |
| 9' 4.0" | 9.8' | 8.6' | 3.8' | |
| 8' 4.8" | 10.3' | 8.7' | 3.4' | |
| 9' 6.0" | 10.8' | 8.9' | 3.1' | |

B = X-(A+9")
B = DISTANCE FROM FRONT EDGE OF SIDEWALK TO BACK POINT OF 12:1 (8.33%) SLOPE.
* BACK OF SIDEWALK DROP REQUIRED FOR ALL SIDEWALK SLOPES.
** BACK OF SIDEWALK DROP REQUIRED FOR SIDEWALK SLOPES 0.04.

SHEET 1 OF 3
848.05

STATE OF NORTH CAROLINA
DEPT. OF TRANSPORTATION
DIVISION OF HIGHWAYS
RALEIGH, N.C.

1-12

ENGLISH STANDARD DRAWING FOR
**CURB RAMP**
PROPOSED CURB AND GUTTER

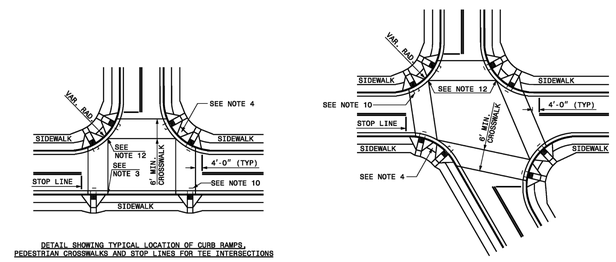


SHEET 2 OF 3
848.05

STATE OF NORTH CAROLINA
DEPT. OF TRANSPORTATION
DIVISION OF HIGHWAYS
RALEIGH, N.C.

1-12

ENGLISH STANDARD DRAWING FOR
**CURB RAMPS**
NOTES

NOTES:

1. CONSTRUCT THE RAMP SURFACE TO BE STABLE, FIRM, AND SLIP RESISTANT. CONSTRUCT THE CURB RAMP TYPE AS SHOWN IN THE PAVEMENT MARKING PLANS OR AS DIRECTED BY THE ENGINEER.
2. LOCATE CURB RAMPS AND PLACE PEDESTRIAN CROSSWALK MARKINGS AS SHOWN IN THE PAVEMENT MARKING PLANS. WHEN FIELD ADJUSTMENTS REQUIRE MOVING CURB RAMPS OR MARKINGS AS SHOWN, CONTACT THE SIGNING AND DELINEATION UNIT OR LOCATE AS DIRECTED BY THE ENGINEER.
3. COORDINATE THE CURB RAMP AND THE PEDESTRIAN CROSSWALK MARKINGS SO A 4'x4' CLEAR SPACE AT THE BASE OF THE CURB RAMP WILL FALL WITHIN THE PEDESTRIAN CROSSWALK LINES.
4. SET BACK DISTANCE FROM INSIDE CROSSWALK MARKING TO NEAREST EDGE OF TRAVEL LANE IS 4' MINIMUM.
5. REFER TO THE PAVEMENT MARKING PLANS FOR STOP BAR LOCATIONS AT SIGNALIZED INTERSECTIONS. IF A PAVEMENT MARKING PLAN IS NOT PROVIDED, CONTACT THE SIGNAL DESIGN SECTION FOR THE STOP BAR LOCATIONS OR LOCATE AS DIRECTED BY THE ENGINEER.
6. TERMINATE PARKING A MINIMUM OF 20' BACK OF A PEDESTRIAN CROSSWALK.
7. CONSTRUCT CURB RAMPS A MINIMUM OF 4' WIDE.
8. CONSTRUCT THE RUNNING SLOPE OF THE RAMP 8.33% MAXIMUM.
9. ALLOWABLE CROSS SLOPE ON SIDEWALKS AND CURB RAMPS WILL BE 2% MAXIMUM.
10. CONSTRUCT THE SIDE FLARE SLOPE A MAXIMUM OF 10% MEASURED ALONG THE CURB LINE.
11. CONSTRUCT THE COUNTER SLOPE OF THE GUTTER ON STREET AT THE BASE OF THE CURB RAMP A MAXIMUM OF 5% AND MAINTAIN A SMOOTH TRANSITION.
12. CONSTRUCT LANDINGS FOR SIDEWALK A MINIMUM OF 4'x4' WITH A MAXIMUM SLOPE OF 2% IN ANY DIRECTION. CONSTRUCT LANDINGS FOR MEDIAN ISLANDS A MINIMUM OF 5'x5' WITH A MAXIMUM SLOPE OF 2% IN ANY DIRECTION.
13. TO USE A MEDIAN ISLAND AS A PEDESTRIAN REFUGE AREA, MEDIAN ISLANDS WILL BE A MINIMUM OF 6' WIDE. CONSTRUCT MEDIAN ISLANDS TO PROVIDE PASSAGE OVER OR THROUGHT THE ISLAND.
14. SMALL CHANNELIZATION ISLANDS THAT CAN NOT PROVIDE A 5'X5' LANDING AT THE TOP OF A RAMPS, WILL BE CUT THROUGH LEVEL WITH THE SURFACE STREET.
15. CURB RAMPS WITH RETURNED CURBS MAY BE USED ONLY WHERE PEDESTRIANS WOULD NOT NORMALLY WALK ACROSS THE RAMP. THE ADJACENT SURFACE IS PLANTING OR OTHER NON-WALKING SURFACE OR THE SIDE APPROACH IS SUBSTANTIALLY OBSTRUCTED.
16. PLACE A ½" EXPANSION JOINT WHERE THE CONCRETE CURB RAMP JOINS THE CURB AS SHOWN IN ROADWAY STANDARD DRAWING 848.01
17. PLACE ALL PEDESTRIAN PUSH BUTTON ACTUATORS AND CROSSING SIGNALS AS SHOWN IN THE PLANS OR AS SHOWN IN THE MUTCD.
18. CURB RAMPS THROUGH MEDIAN ISLANDS, SINGLE RAMPS AT DUAL CROSSWALKS OR LIMITED R/W SITUATIONS, WILL BE HANDLED BY SPECIAL DETAILS. CONTACT THE CONTRACT STANDARDS AND DEVELOPMENT UNIT FOR THE DETAILS OR FOR A SPECIAL DESIGN.

SHEET 3 OF 3
848.05

EarthCentric Engineering, Inc.
Licence # C-2638
204 W. Clay Street
Mebane, NC 27302
Phone: (919) 563-9041
Fax: (919) 304-3234
E-Mail: Phil.Koch@EarthCentric.com

ECE Incorporated

PRINCIPAL ENGINEER
PHIL KOCH - NCPE #22634

HENDERSON WOODS
ORANGE COUNTY, NORTH CAROLINA

USPS CLUSTER BOX UNIT AREA
DETAILS

| REV. | DATE | DESCRIPTION | BY |
|---|---|---|---|
| 1 | 09/09/2015 | ORANGE CO. COMMENTS | TMM |
| 2 | 09/16/2015 | SOLID WASTE COMMENTS | SCS |
| 3 | 11/18/2015 | WETLANDS DELINEATION | TMM |

| | |
|---|---|
| DATE: | JULY 1, 2015 |
| HORIZONTAL SCALE: | N/A |
| VERTICAL SCALE: | N/A |
| PROJECT MANAGER: | CPK |
| DRAWN BY: | SCS |
| PROJECT NO: | 14-044 |
| DRAWING NAME: | 14-044 DETAILS |

THIS DRAWING AND THE DESIGN HEREON ARE THE PROPERTY OF EarthCentric Engineering, Inc. THE INFORMATION ON THIS DRAWING IS NOT FOR USE ON ANY OTHER SITE OR PROJECT. THE REPRODUCTION OR OTHER USE OF THIS DRAWING IN WHOLE OR IN PART, WITHOUT WRITTEN CONSENT OF EarthCentric Engineering, Inc., IS PROHIBITED.

COPYRIGHT 2015 EarthCentric Engineering, Inc.

SHEET NO.
D4.1

PRELIMINARY

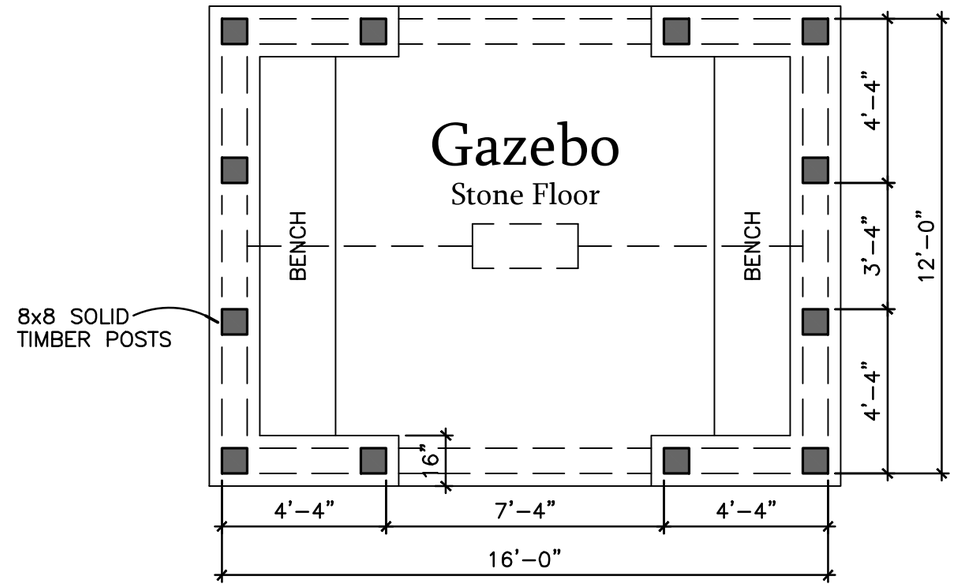


## Floor Plan

1/4" = 1'-0"

192 square feet

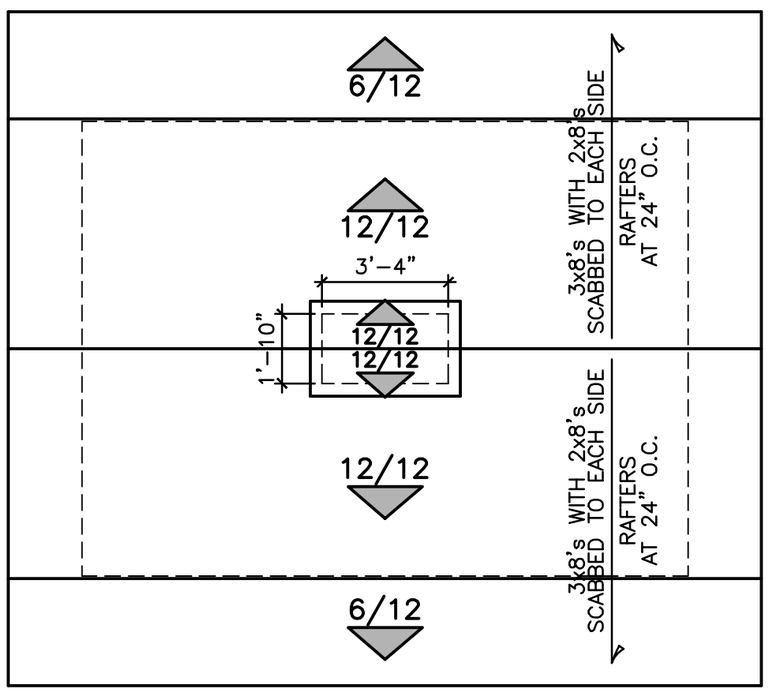


## Roof Plan

1/4" = 1'-0"

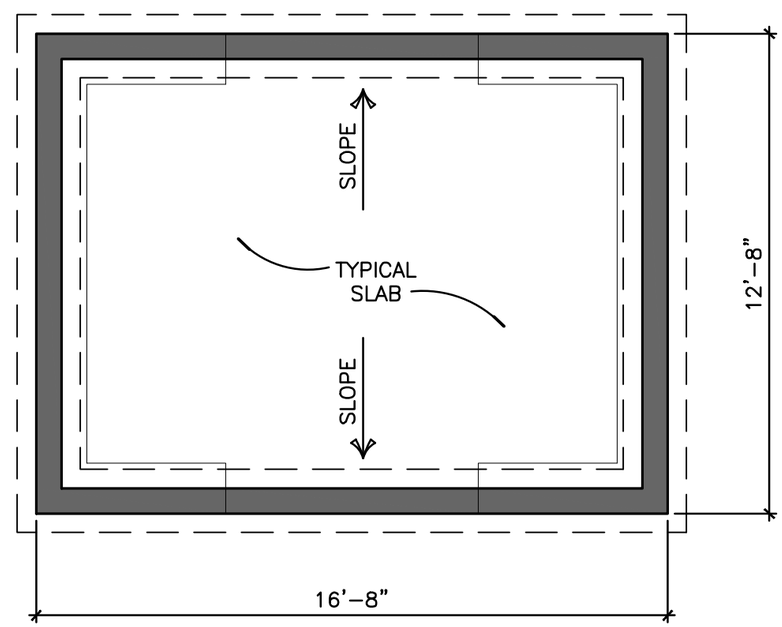


## Foundation Plan

1/4" = 1'-0"

kdkdesign

# Henderson Woods - Gazebo

Chapel Hill, North Carolina

KDK Design Group, LLC
506 Wayne Drive
Raleigh, NC 27608
919.301.8643
kdkdesigngroup.com

©2015 KDK Design Group, LLC
The information contained herein (drawings, written material, and design concepts) shall not be used or reproduced in whole or in part in any form or format without prior written consent of KDK Design Group, LLC.

September 18, 2015

A-1

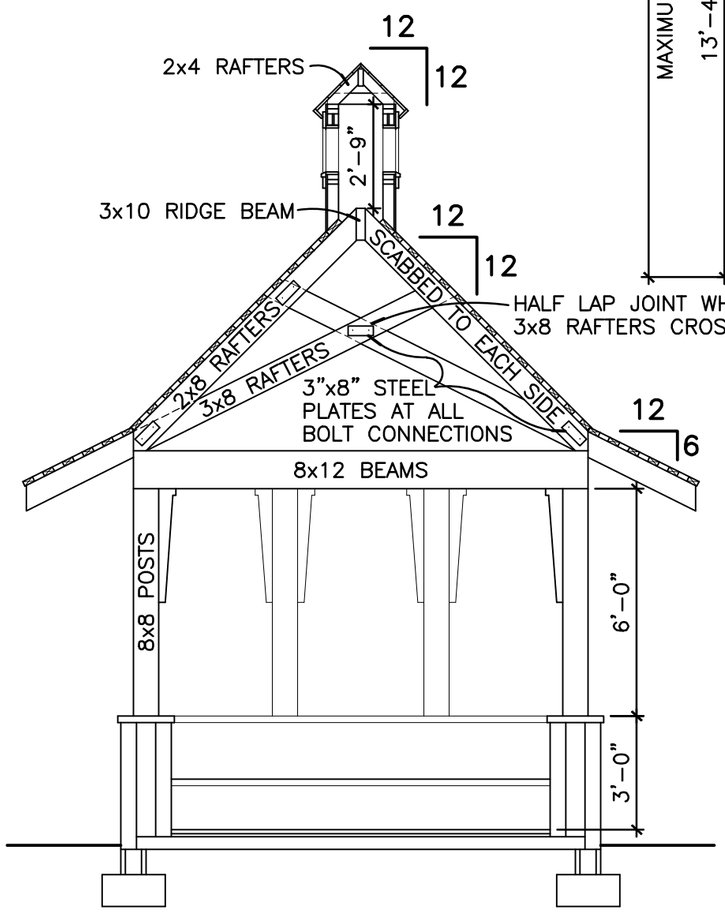


1 Building Section

1/4" = 1'-0"

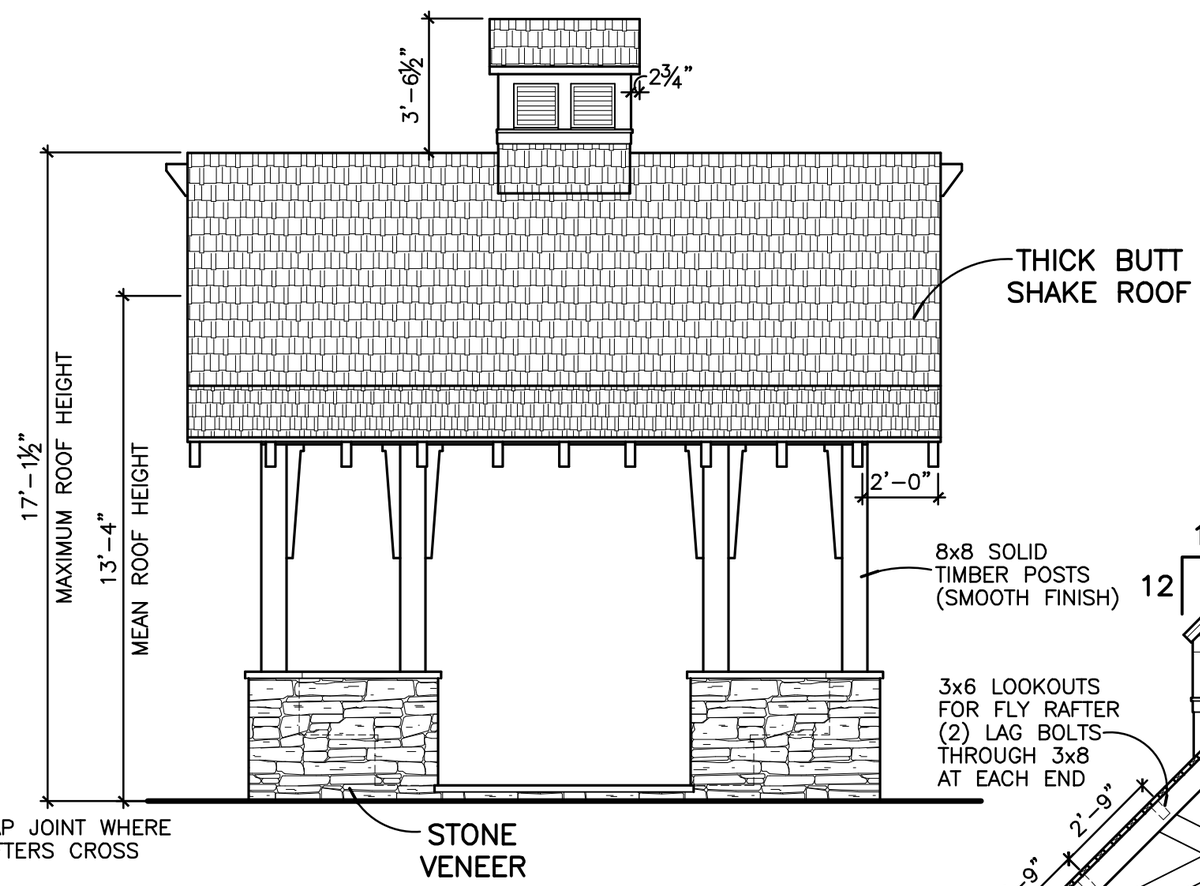


Front and Rear Elevations

1/4" = 1'-0"

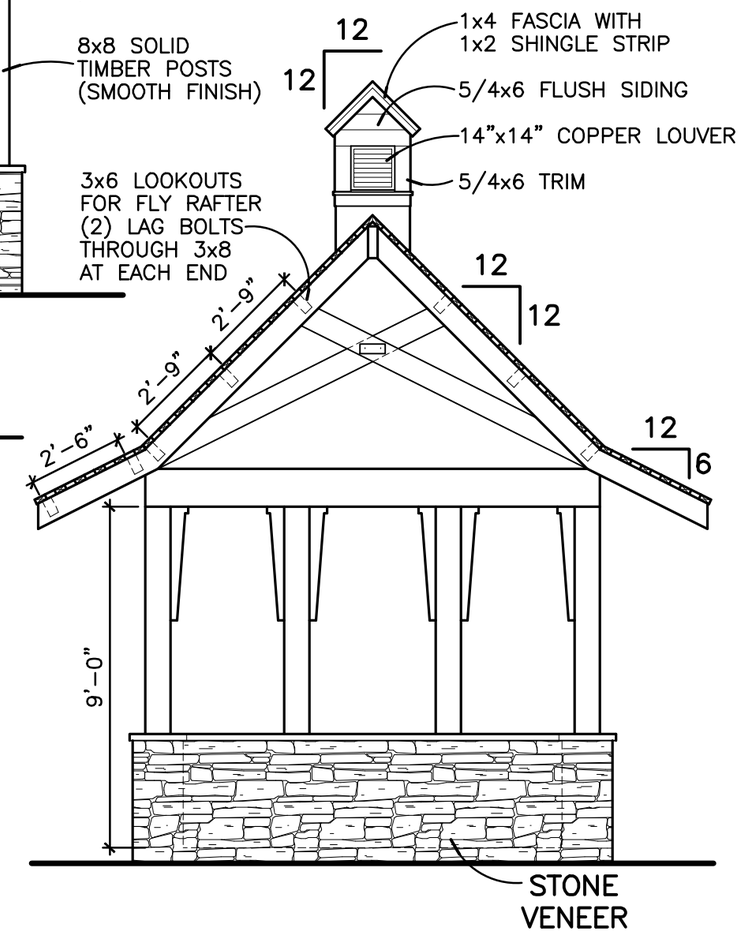


End Elevations

1/4" = 1'-0"

kdkdesign

Henderson Woods - Gazebo

Chapel Hill, North Carolina

KDK Design Group, LLC
506 Wayne Drive
Raleigh, NC 27608
919.301.8643
kdkdesigngroup.com

©2015 KDK Design Group, LLC
The information contained herein (drawings, written material, and design concepts) shall not be used or reproduced in whole or in part in any form or format without prior written consent of KDK Design Group, LLC.

September 18, 2015

A-2

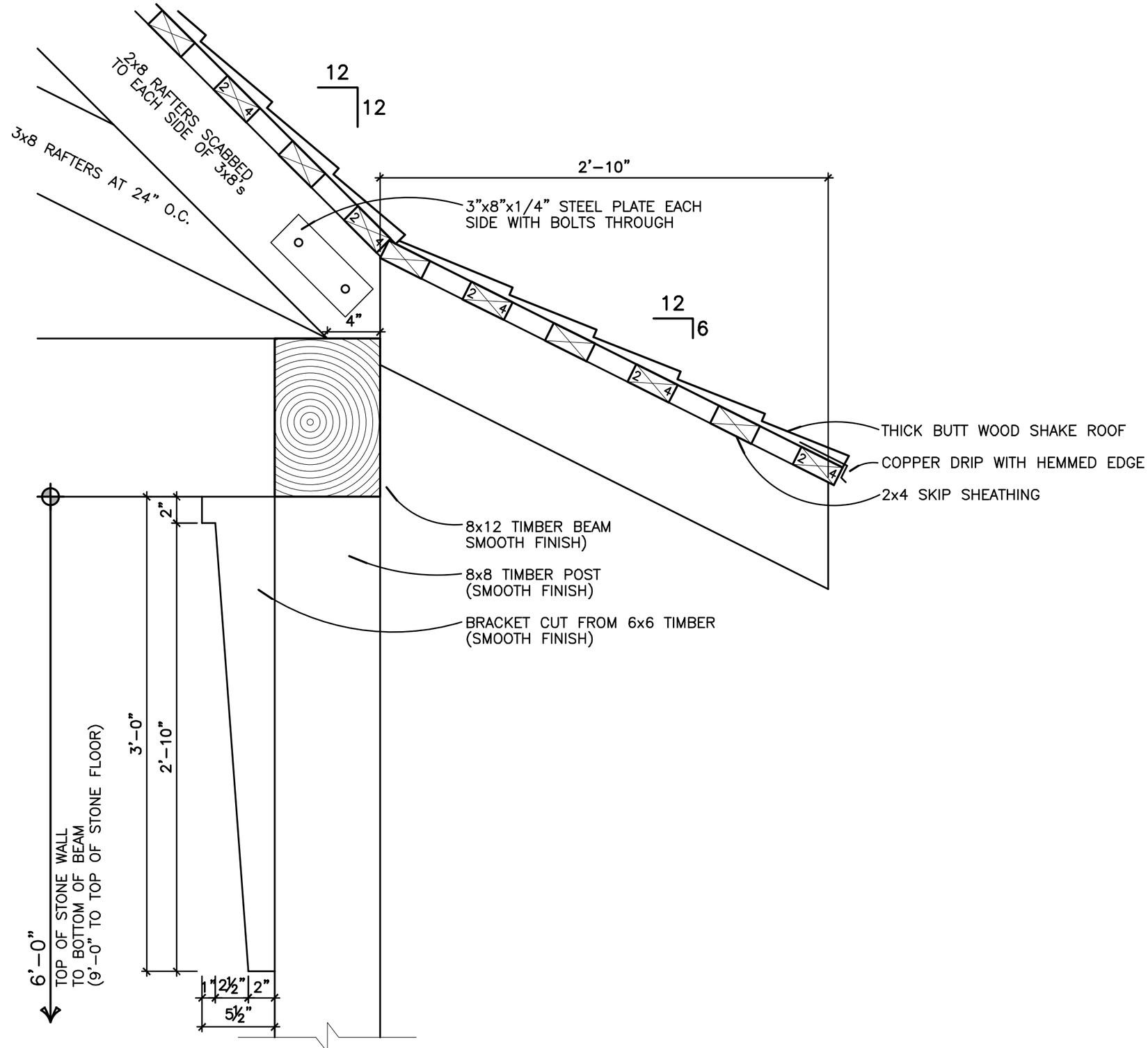


## 1 Cornice Detail

1-1/2" = 1'-0"

typical

kdkdesign

# Henderson Woods - Gazebo

Chapel Hill, North Carolina

KDK Design Group, LLC
506 Wayne Drive
Raleigh, NC 27608
919.301.8643
kdkdesigngroup.com

© 2015 KDK Design Group, LLC
The information contained herein (drawings, written material, and design concepts) shall not be used or reproduced in whole or in part in any form or format without prior written consent of KDK Design Group, LLC.

September 18, 2015

A-3

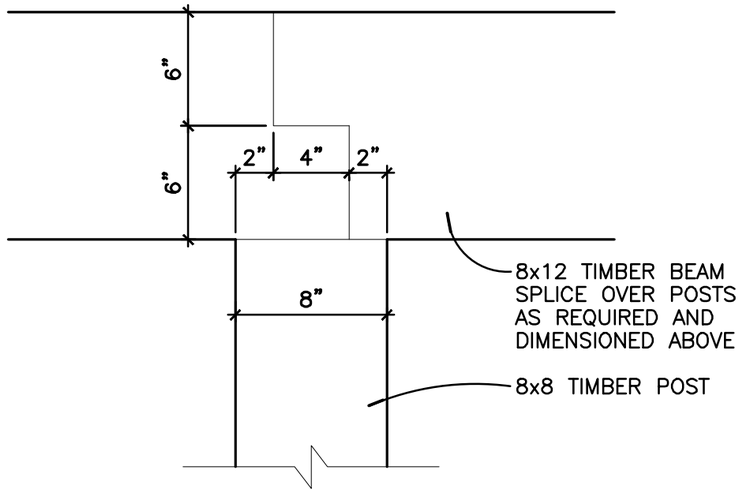


## 1 Timber Beam Half-Lap Detail

1-1/2" = 1'-0"

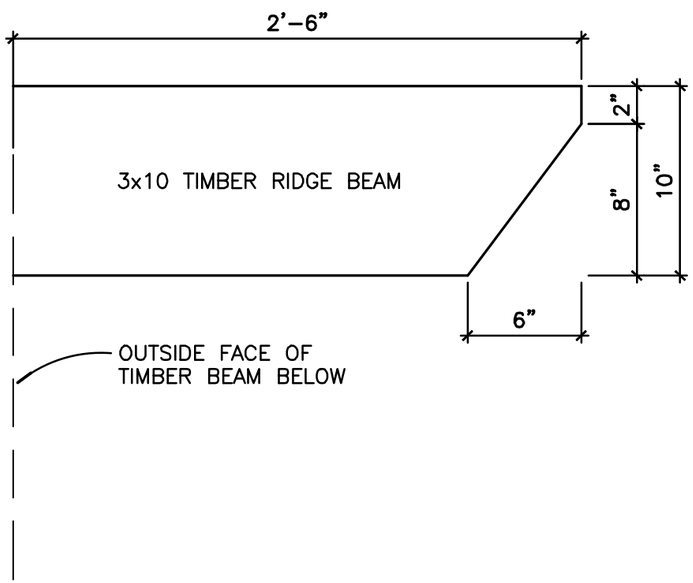


## 2 Timber Ridge Beam End

1-1/2" = 1'-0"

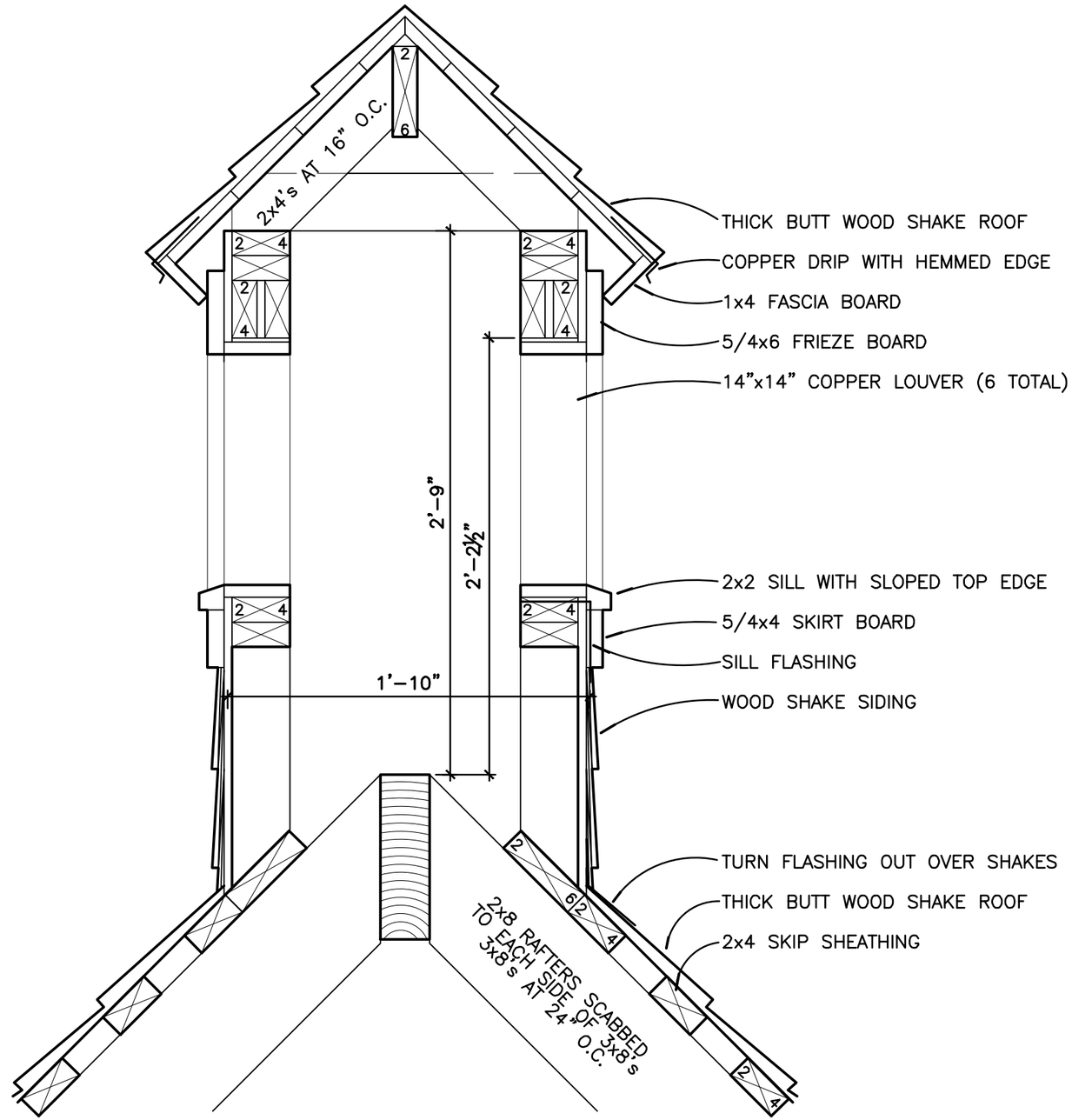


## 3 Cupola Detail

1-1/2" = 1'-0"

typical

kdkdesign

# Henderson Woods - Gazebo

Chapel Hill, North Carolina

KDK Design Group, LLC
506 Wayne Drive
Raleigh, NC 27608
919.301.8643
kdkdesigngroup.com

© 2015 KDK Design Group, LLC
The information contained herein (drawings, written material, and design concepts)shall not be used or reproduced in whole or in part in any form or format without prior written consent of KDK Design Group, LLC.

September 18, 2015

A-4

**ORANGE COUNTY**
**BOARD OF COMMISSIONERS**

**ACTION AGENDA ITEM ABSTRACT**
**Meeting Date:** December 7, 2015

**Action Agenda Item No.** 8-a

**SUBJECT:** FY2015-16 First Quarter General Fund and Enterprise Funds Financial Report

**DEPARTMENT:** Finance and Administrative Services

**PUBLIC HEARING: (Y/N)** No

**ATTACHMENT(S):**

1. Narrative; including Revenue and Expenditure Tables
2. Revenues and Expenditure Tables
3. North Carolina State University Third Quarter 2015 Economic Outlook

**INFORMATION CONTACT**:
Gary Donaldson, (919) 245-2453
Paul Laughton, (919) 245-2152

**PURPOSE:** To receive a First Quarter General Fund and Enterprise Funds Summary Financial Report for the period of July 1, 2015 through September 30, 2015.

**BACKGROUND:** As part of meeting the periodic financial reporting requirements and providing timely source information in regards to the financial status of the County, staff has developed financial information related to the FY2015-16 First Quarter General Fund and Enterprise Funds.

**FINANCIAL IMPACT:** There is no financial impact with receiving this FY2015-16 First Quarter Financial Report.

**SOCIAL JUSTICE IMPACT:** There is no Orange County Social Justice Goal impact associated with this item.

**RECOMMENDATION(S):** The Manager recommends that the Board receive the FY 2015-16 First Quarter Financial Report and provide staff with feedback.

Attachment 1

**MEMORANDUM**

To: Board of County Commissioners

From: Gary Donaldson, Chief Financial Officer

Date: December 7, 2015

Re: First Quarter FY2015-16 Financial Report- Period Ending September 30, 2015

---

The First Quarter FY2015-16 report represents the Department of Finance and Administrative Services commitment to providing important financial reporting to you, the County Manager, and our Residents.

The Major Orange County Operating funds are:

- General Fund
- Enterprise Funds (Solid Waste Fund and Sportsplex Fund)

The quarterly report is presented with a detailed comparison of FY2015-16 Budget versus Actual and FY2014-15 Budget versus Actual indicating year to date revenues and expenditures performance. The primary goal of this quarterly report is to communicate a concise financial status of the County's major operating funds. Your input and feedback is appreciated, as enhancements are made to our quarterly financial reporting.

An Economic Outlook Report by Dr. Michael Walden of NC State University for the period ending September 30, 2015 is included to complement this quarterly financial report.

**General Fund Performance**

The FY2015-16 General Fund performance is consistent with historical performance. During the first three months of the County's fiscal year, expenditures normally exceed revenues due to the timing of Property Tax revenues which are due September 1. The County's cash flow and ability to cover expenditures during this period is attributed to a strong balance sheet.

**General Fund Revenues**

First quarter FY2015-16 General Fund revenues total $24.5 million or 11.8% of budgeted revenues, which is consistent with 1Q FY2014-15 total of $24.5 million or 12.2% of budgeted revenues. This slight decrease of 0.4% is mostly attributed to a decrease in Intergovernmental revenue, and more specifically, the timing of the receipt of Lottery Proceeds. For 1Q FY2015-16, $0 Lottery proceeds were received, while in 1Q FY2014-15, $218,775 was received. Lottery proceeds of $713,239 were received after September 30; these payments will be indicated in the second quarter report.

## Summary of Major General Fund Revenues

| Category | FY2015-16 Original Budget | FY2015-16 Revised Budget | YTD Actual | YTD % Collected |
|---|---|---|---|---|
| Property Tax | $ 147,551,332 | $ 147,551,332 | $ 18,746,742 | 12.7% |
| Local Option Sales Tax | 20,652,132 | 20,652,132 | - | 0.0% |
| Licenses and Permits | 313,000 | 313,000 | 1,207 | 0.4% |
| Charges for Services | 10,766,030 | 10,772,114 | 2,320,306 | 21.5% |
| Intergovernmental | 15,000,278 | 15,234,098 | 3,313,421 | 21.8% |
| Transfers from Other Funds | 1,052,278 | 1,052,600 | - | 0.0% |
| Investment Earnings | 52,500 | 52,500 | 5,656 | 10.8% |
| Miscellaneous | 737,468 | 841,121 | 133,797 | 15.9% |
| Fund Balance Appropriation | 10,650,770 | 10,804,066 | - | 0.0% |
| **General Fund Revenues** | **206,776,110** | **207,272,963** | **24,521,129** | **11.8%** |

| Category | FY2014-15 Original Budget | FY2014-15 Revised Budget | YTD Actual | YTD % Collected |
|---|---|---|---|---|
| Property Tax | 145,714,650 | $ 145,714,650 | $ 18,761,899 | 12.9% |
| Local Option Sales Tax | 19,001,962 | 19,001,962 | - | 0.0% |
| Licenses and Permits | 313,000 | 313,000 | 342 | 0.1% |
| Charges for Services | 9,799,005 | 9,806,153 | 2,130,084 | 21.7% |
| Intergovernmental | 13,575,486 | 13,730,768 | 3,462,016 | 25.2% |
| Transfers from Other Funds | 1,052,600 | 1,052,600 | - | 0.0% |
| Investment Earnings | 105,000 | 105,000 | 1,620 | 1.5% |
| Miscellaneous | 798,065 | 895,224 | 182,172 | 20.3% |
| Fund Balance Appropriation | 10,068,343 | 10,150,647 | - | 0.0% |
| **General Fund Revenues** | **200,428,111** | **200,770,004** | **$ 24,538,133** | 12.2% |

## Property Tax Revenues

1Q FY2015-16 Property Tax revenues total $18.7 million or 12.7% of budgeted revenues, which is consistent with 1Q FY2014-15 total of $18.7 million or 12.9% of budgeted revenues, with actual collections in FY2015-16 less than FY2014-2015 collections in the first quarter by $15,157. It is important to note that Property Tax revenues are due September 1, with interest and penalties accruing January 2016. The billing versus collection rate is projected to be in the high 90 percentile by December 31. The tax office annual billing versus collection rate is 99%. Property Tax budgeted revenues accounts for 71% of the total General Fund revenue budget.

## Local Option Sales Tax Revenues

1Q FY2015-16 and 1Q FY2014-15 Sales Tax revenues total $0. This is attributed to the timing of receipts from the North Carolina Department of Revenue. The local government sales tax distributions in any given month reflect actual sales made up to three months prior. For example, August collections reflect July vendor sales, which are processed and allocated in September, with a local government distribution made on or before October 20. The October payment is the first month's sales tax distribution allocated to the July-June fiscal year. The 2Q FY2015-16 report will include Sales Tax revenues activity following the North Carolina Department of Revenue computation and distribution to local governments.

The North Carolina Department of Revenue administers the following monthly disbursement of local option sales taxes recorded in the County's General Fund:

- Article 39 (one-cent) - authorized in 1971, and is currently allocated on a point of delivery basis.
- Article 40 (half-cent) - authorized in 1983, and is currently allocated on a per capita basis.
- Article 42 (half-cent) - authorized in 1986, and is currently allocated on a point of delivery basis.

**Charges for Services**

1Q FY2015-16 Charges for Services total $2.3 million or 21.5% of budgeted revenues, as compared with 1Q FY2014-15 total of $2.1 million or 21.7% of budgeted revenues with actual collections in FY2015-16 exceeding FY2014-15 collections in the first quarter by $190,222. This source of income is comprised of various departmental fees for services including Planning and Inspections, Environment, Agriculture, Parks and Recreation, Aging, Sheriff's Office, Emergency Services, and Register of Deeds. Register of Deeds revenues are approximately 8.1% higher as compared to the first quarter of FY2014-15, the department has received approximately $100,000 more in revenue as compared to the same period in FY2014-15. This department has collected approximately 33% of its annual budgeted revenues.

**Intergovernmental Revenues**

1Q FY2015-16 Intergovernmental revenues total $3.3 million or 21.8% of budgeted revenues, as compared to 1Q FY2014-15 total of revenues of $3.4 million or 25.2% of budgeted revenues. The variance reflects only a timing variance of receipts and is not a performance variance. This source of income includes revenue received from the Federal, State, and other local governments. The Department of Social Services receives 64% of the budgeted revenues.

**General Fund Expenditures**

1Q FY2015-16 General Fund expenditures total $50.6 million or 24.4% of budgeted expenditures, as compared with 1Q FY2014-15 total expenditures of $51.3 million or 25.5% of budgeted expenditures, with actual expenditures in FY2015-16 less than FY2014-15 expenditures by $719,975. This decrease of 1.1% is attributed to the timing of Debt Service payments, which is $476,415 less in FY2015-16 than in FY2014-15 through the first quarter, and attributed to the timing of payments to the OPC Area Program and payments to Municipal Library and Recreation partners, which is $510,944 less in FY2015-16 than in FY2014-15 through the first quarter.

**Summary of Major General Fund Expenditures**

| Category | FY2015-16 Original Budget | FY2015-16 Revised Budget | YTD Actual | YTD % Expended |
|---|---|---|---|---|
| Community Services | $ 10,568,530 | $ 10,587,536 | $ 2,375,045 | 22.4% |
| General Government | 7,761,418 | 7,761,418 | 1,663,298 | 21.4% |
| Public Safety | 22,915,823 | 22,992,264 | 5,288,342 | 23.0% |
| Human Services | 33,941,247 | 34,073,677 | 8,497,393 | 24.9% |
| Education | 78,837,341 | 78,837,341 | 19,462,335 | 24.7% |
| Support Services | 11,726,879 | 11,726,879 | 3,947,885 | 33.7% |
| Non-Departmental | 41,024,872 | 41,293,848 | 9,394,850 | 22.8% |
| **General Fund Expenditures** | **206,776,110** | **207,272,963** | **$ 50,629,148** | **24.4%** |

| Category | FY2014-15 Original Budget | FY2014-15 Revised Budget | YTD Actual | YTD % Expended |
|---|---|---|---|---|
| Community Services | 9,706,823 | $ 9,845,009 | $ 2,349,670 | 23.9% |
| General Government | 7,052,986 | 7,148,018 | 1,843,240 | 25.8% |
| Public Safety | 22,021,055 | 22,167,858 | 4,896,399 | 22.1% |
| Human Services | 32,016,307 | 32,223,056 | 9,232,653 | 28.7% |
| Education | 76,847,414 | 76,847,414 | 18,964,854 | 24.7% |
| Support Services | 11,087,403 | 11,343,016 | 4,076,750 | 35.9% |
| Non-Departmental | 41,696,123 | 41,971,111 | 9,985,557 | 23.8% |
| **General Fund Expenditures** | **200,428,111** | **201,545,482** | **$ 51,349,123** | **25.5%** |

**Please note that the reporting of Budget versus Actual expenditures is reflected by the Functional Leadership Teams.**

**Community Services -** Animal Services, NC Cooperative Extension, DEAPR, Economic Development, Planning and Inspections.

1Q FY2015-16 and 1QFY2014-15 Community Services expenditures amounted to $2.4 million for both quarterly periods and represented 22.4% and 23.9% of budgeted expenditures, respectively. The 1.5% variance in budgeted expenditures reflects an increase of $742,527 in the FY2015-16 budget is attributed to additional Orange Public Transportation service expansion routes and personnel, additional costs in DEAPR related to full year of operational costs of Blackwood Farm Park, and the planned opening of the Cedar Grove Community Center in Spring 2016, a new position and additional seasonal personnel costs.

**General Government -** Board of Elections, Clerk to the Board, County Attorney, County Manager, Register of Deeds and Tax Administration

1Q FY2015-16 General Government expenditures total $1.6 million or 21.4% of budgeted expenditures, as compared with 1Q FY2014-15 total of $1.8 million or 25.8% of budgeted expenditures. The Tax Administration Department expenditures were 4.5% lower due to a decrease in Contract Services.

**Public Safety –** Courts, Emergency Services, and Sheriff's Office

1Q FY2015-16 Public Safety expenditures total $5.3 million or 23% of budgeted expenditures, as compared with 1Q FY2014-15 total of $4.9 million or 22.1% of budgeted expenditures. The Department of Emergency Services expenditures are approximately 1.3% higher than during the first quarter of FY2014-15. This EMS increase is attributed to Personnel Services accounts (including the Temporary Personnel account). EMS remains within budget and assuming a constant spending rate, the department is projected to end within budget.

**Human Services –** Department on Aging, Child Support, Housing, Human Rights, and Community Development, Library, Public Health and Social Services

1Q FY2015-16 Human Services expenditures total $8.5 million or 24.9% of budgeted expenditures, as compared with 1Q FY2014-15 total of $9.2 million or 28.7% of budgeted expenditures. The Department of Social Services comprises more than 50% of the human services budget, and is the primary driver of the first quarter expenditure reduction. The Department of Social Services expenditures are 3.1% lower than during the first quarter of FY2014-15, due to the transfer of Drug Treatment and Pre-Trial expenditures to the County Manager's office, 1Q FY2014-15 flood expenditures, and OPC Area payment timing variance.

**Support Services -** Asset Management Services, Community Relations, Finance, Human Resources, and Information Technology

1Q FY2015-16 Support Services expenditures total $3.9 million or 33.7% of budgeted expenditures, as compared with 1Q FY2014-15 total of $4 million or 35.9% of budgeted expenditures. The year to date rate of expenditures are above the 25% straight-line due to the required Finance and Administrative Service workers compensation, bonds and insurance payments and Information Technology contract payments.

**Education**

1Q FY2015-16 Education expenditures total $19.4 million or 24.7% of budgeted expenditures, as compared with 1Q FY2014-15 total of $18.9 million or 24.7% of budgeted expenditures. The FY2015-16 Education budget was increased by

$1.9 million over the prior year's budget, and the County has remitted amounts commensurate with the prior year. The Education expenditures are comprised of Current Expenses to the Chapel Hill-Carrboro City School District and Orange County School District. Current Expenses of $18.5 million or 25% of budgeted expenditures was remitted to the school districts in the first quarter; this was $487,583 more than the same period in FY2014-15. The remaining Education budget pertains to Fair Funding, Recurring Capital, and Other Related County Support specifically support to Durham Technical College (Orange County campus).

**Non-Departmental**

1Q FY2015-16 Non-Departmental expenditures total $9.3 million or 22.8% of budgeted expenditures, as compared with 1Q FY2014-15 total of $9.9 million or 23.8% of budgeted expenditures. The first quarter expenditures are 1% lower than the same period in 1Q FY2014-15 due to the timing of debt service payments.

In summary, 1Q FY2015-16 General Fund Revenues and Expenditures are in line with the adopted FY2015-16 General Fund Budget.

**Enterprise Funds Performance**

**Solid Waste Fund**

1Q FY2015-16 Solid Waste Fund performance is in line with the adopted FY2015-16 budget. First quarter revenues of $1.6 million or 14.6% of budgeted revenues and expenses are $4.5 million or 40% of budgeted expenses. This compares with FY2014-15 first quarter revenues of $1.4 million or 11% of budgeted revenues and expenses of $7.3 million or 46% of budgeted expenses. The FY2014-15 higher expenses are attributed to landfill closure costs.

**Sportsplex Fund**

1Q FY2015-16 Sportsplex Fund performance is consistent with the adopted FY2015-16 budget. The revenue stream is comprised of Ice Rink-34% of budgeted revenues, Membership and Fitness-32% of budgeted revenues, with the remaining revenues comprised primarily of Aquatic and Kidsplex. First quarter revenues of $735,138 or 22.4% of budgeted revenues and expenses are $942,539 or 27.7% of expenses. This compares with FY2014-15 first quarter revenues of $776,962 or 20.3% of budgeted revenues and expenses of $1.3 million or 25.9% of budgeted expenses.

Enclosures

# Revenue by Category (1st Quarter)

Summary - General Fund

| | FY2015-16 | | | | FY2014-15 | | | |
|---|---|---|---|---|---|---|---|---|
| | Original Budget | Revised Budget | YTD Actual | YTD % Collected | Original Budget | Revised Budget | YTD Actual | YTD % Collected |
| **Property Taxes** | | | | | | | | |
| Property Taxes | 136,413,322 | 136,413,322 | 15,524,040 | 11.4% | 135,734,649 | 135,734,649 | 15,483,207 | 11.4% |
| Motor Vehicles | 8,953,010 | 8,953,010 | 2,636,852 | 29.5% | 8,102,271 | 8,102,271 | 2,655,964 | 32.8% |
| Gross Receipts | 55,000 | 55,000 | 19,758 | 35.9% | 45,000 | 45,000 | 21,007 | 46.7% |
| Delinquent Taxes | 1,150,000 | 1,150,000 | 438,362 | 38.1% | 994,130 | 994,130 | 422,927 | 42.5% |
| Interest on Delinquent Taxes | 450,000 | 450,000 | 61,069 | 13.6% | 350,000 | 350,000 | 93,054 | 26.6% |
| Late List Penalties | 75,000 | 75,000 | 15,568 | 20.8% | 60,000 | 60,000 | 31,691 | 52.8% |
| Animal Taxes | 200,000 | 200,000 | 51,092 | 25.5% | 205,000 | 205,000 | 54,049 | 26.4% |
| Beer and Wine | 255,000 | 255,000 | 0 | 0.0% | 223,600 | 223,600 | 0 | 0.0% |
| **Property Taxes Total** | **147,551,332** | **147,551,332** | **18,746,742** | **12.7%** | **145,714,650** | **145,714,650** | **18,761,899** | **12.9%** |
| **Sales Tax** | | | | | | | | |
| Article 39 One Cent | 9,429,650 | 9,429,650 | 0 | 0.0% | 8,667,512 | 8,667,512 | 0 | 0.0% |
| Article 40 Half Cent | 6,489,632 | 6,489,632 | 0 | 0.0% | 5,994,861 | 5,994,861 | 0 | 0.0% |
| Article 42 Half Cent | 4,732,850 | 4,732,850 | 0 | 0.0% | 4,339,589 | 4,339,589 | 0 | 0.0% |
| **Sales Tax Total** | **20,652,132** | **20,652,132** | **0** | **0.0%** | **19,001,962** | **19,001,962** | **0** | **0.0%** |
| **Licenses and Permits** | | | | | | | | |
| Privilege License | 13,000 | 13,000 | 1,207 | 9.3% | 13,000 | 13,000 | 342 | 2.6% |
| Franchise Fee | 300,000 | 300,000 | 0 | 0.0% | 300,000 | 300,000 | 0 | 0.0% |
| **Licenses and Permits Total** | **313,000** | **313,000** | **1,207** | **0.4%** | **313,000** | **313,000** | **342** | **0.1%** |
| **Charges for Services** | | | | | | | | |
| Aging | 67,100 | 67,100 | 26,901 | 40.1% | 67,100 | 68,068 | 28,504 | 41.9% |
| Animal Services | 193,100 | 193,100 | 51,750 | 26.8% | 197,800 | 197,800 | 56,281 | 28.5% |
| Asset Management | 1,156 | 1,156 | 80 | 6.9% | 600 | 600 | 0 | 0.0% |
| Board Of Elections | 54,495 | 54,495 | 220 | 0.4% | 100 | 100 | 0 | 0.1% |
| Child Support | 1,100 | 1,100 | 375 | 34.1% | 1,100 | 1,100 | 584 | 53.1% |
| Cooperative Extension | 20,000 | 20,000 | 1,000 | 5.0% | 20,000 | 26,180 | 11,350 | 43.4% |
| DEAPR | 317,823 | 317,823 | 79,164 | 24.9% | 279,858 | 279,858 | 79,958 | 28.6% |
| Emergency Services | 2,490,215 | 2,490,215 | 548,668 | 22.0% | 2,240,215 | 2,240,215 | 540,502 | 24.1% |
| General Revenue | 472,798 | 472,798 | 0 | 0.0% | 472,798 | 472,798 | 0 | 0.0% |
| Health | 1,588,127 | 1,594,211 | 362,835 | 22.8% | 1,364,166 | 1,364,166 | 294,498 | 21.6% |
| Library | 29,850 | 29,850 | 6,289 | 21.1% | 29,850 | 29,850 | 7,023 | 23.5% |
| OPT | 114,500 | 114,500 | 7,140 | 6.2% | 96,500 | 96,500 | 15,603 | 16.2% |
| Planning & Inspections | 1,065,865 | 1,065,865 | 370,637 | 34.8% | 707,330 | 707,330 | 281,404 | 39.8% |
| Register Of Deeds | 1,355,500 | 1,355,500 | 446,976 | 33.0% | 1,393,687 | 1,393,687 | 346,379 | 24.9% |
| Sheriff | 2,615,700 | 2,615,700 | 400,165 | 15.3% | 2,591,700 | 2,591,700 | 420,880 | 16.2% |
| Tax | 378,701 | 378,701 | 18,104 | 4.8% | 336,201 | 336,201 | 47,116 | 14.0% |
| **Charges for Services Total** | **10,766,030** | **10,772,114** | **2,320,306** | **21.5%** | **9,799,005** | **9,806,153** | **2,130,084** | **21.7%** |
| **Intergovernmental** | | | | | | | | |
| Aging | 532,367 | 535,185 | 33,457 | 6.3% | 541,480 | 546,087 | 38,338 | 7.0% |
| Animal Services | 218,218 | 218,218 | 500 | 0.2% | 200,493 | 200,493 | 62,915 | 31.4% |
| Child Support | 1,318,075 | 1,318,075 | 243,583 | 18.5% | 1,270,000 | 1,270,000 | 241,952 | 19.1% |
| County Debt Svc - Revs | 0 | 0 | 0 | 100.0% | 42,991 | 42,991 | 0 | 0.0% |
| DEAPR | 132,838 | 135,728 | 0 | 0.0% | 126,717 | 130,522 | 3,805 | 2.9% |
| Emergency Services | 0 | 1,101 | 0 | 0.0% | 0 | 0 | 0 | 100.0% |
| General Revenue | 400,000 | 400,000 | 100,000 | 25.0% | 400,000 | 400,000 | 100,000 | 25.0% |
| Health | 973,772 | 1,009,763 | 211,588 | 21.0% | 871,740 | 880,690 | 227,496 | 25.8% |
| Information Technologies | 19,645 | 19,645 | 0 | 0.0% | 19,645 | 19,645 | 0 | 0.0% |
| Library | 100,000 | 100,000 | 24,687 | 24.7% | 100,000 | 100,000 | 27,735 | 27.7% |
| OPC Mental Health | 40,000 | 40,000 | 7,889 | 19.7% | 40,000 | 40,000 | 7,938 | 19.8% |
| OPT | 844,100 | 844,100 | 10,094 | 1.2% | 611,647 | 611,647 | 57,209 | 9.4% |
| Planning & Inspections | 24,024 | 24,024 | 0 | 0.0% | 0 | 0 | 0 | 100.0% |
| Public Safety Non-Deptl | 277,731 | 277,731 | 69,420 | 25.0% | 277,731 | 277,731 | 63,045 | 22.7% |
| Lottery Proceeds | 0 | 191,020 | 0 | 0.0% | 0 | 137,920 | 218,775 | 158.6% |
| Sheriff | 364,469 | 364,469 | 32,778 | 9.0% | 184,469 | 184,469 | 2,968 | 1.6% |
| Social Services | 9,709,839 | 9,709,839 | 2,579,424 | 26.6% | 8,843,373 | 8,843,373 | 2,409,838 | 27.3% |
| Tax | 45,200 | 45,200 | 0 | 0.0% | 45,200 | 45,200 | 0 | 0.0% |
| **Intergovernmental Total** | **15,000,278** | **15,234,098** | **3,313,421** | **21.8%** | **13,575,486** | **13,730,768** | **3,462,016** | **25.2%** |
| **Transfers from Other Funds** | | | | | | | | |
| Impact Fees | 1,040,000 | 1,040,000 | 0 | 0.0% | 1,040,000 | 1,040,000 | 0 | 0.0% |
| Other | 12,600 | 12,600 | 0 | 0.0% | 12,600 | 12,600 | 0 | 0.0% |
| **Transfers from Other Funds Total** | **1,052,600** | **1,052,600** | **0** | **0.0%** | **1,052,600** | **1,052,600** | **0** | **0.0%** |
| **Investment Earnings Total** | **52,500** | **52,500** | **5,656** | **10.8%** | **105,000** | **105,000** | **1,620** | **1.5%** |
| **Miscellaneous Total** | **737,468** | **841,121** | **133,797** | **15.9%** | **798,065** | **895,224** | **182,172** | **20.3%** |
| **Appropriated Fund Balance Total** | **10,650,770** | **10,804,066** | **0** | **0.0%** | **10,068,343** | **10,150,647** | **0** | **0.0%** |
| **Total General Fund Revenue** | **206,776,110** | **207,272,963** | **24,521,129** | **11.8%** | **200,428,111** | **200,770,004** | **24,538,134** | **12.2%** |

# Expenditures by Functional Leadership Team (1st Quarter)

Summary - General Fund

| | FY2015-16 | | | | FY2014-15 | | | |
|---|---|---|---|---|---|---|---|---|
| | Original Budget | Revised Budget | YTD Actual* | YTD % Expended | Original Budget | Revised Budget | YTD Actual | YTD % Expended |
| **Community Services** | | | | | | | | |
| Animal Services | 1,958,791 | 1,958,791 | 453,401 | 23.1% | 1,884,793 | 1,897,793 | 409,580 | 21.6% |
| Cooperative Extension | 379,843 | 379,843 | 70,955 | 18.7% | 367,972 | 374,152 | 72,998 | 19.5% |
| Department of Environment, Agriculture, Parks & Recreation | 3,464,888 | 3,483,894 | 834,407 | 24.0% | 3,177,359 | 3,235,775 | 891,368 | 27.5% |
| Economic Development | 515,575 | 515,575 | 121,437 | 23.6% | 511,710 | 520,276 | 83,206 | 16.0% |
| Planning & Inspections | 4,124,325 | 4,124,325 | 859,480 | 20.8% | 3,639,881 | 3,691,906 | 827,239 | 22.4% |
| Recreation Municipal | 125,108 | 125,108 | 35,365 | 28.3% | 125,108 | 125,108 | 65,279 | 52.2% |
| **Community Services Total** | **10,568,530** | **10,587,536** | **2,375,045** | **22.4%** | **9,706,823** | **9,845,009** | **2,349,670** | **23.9%** |
| **General Government** | | | | | | | | |
| Board of County Commissioners | 870,355 | 870,355 | 246,679 | 28.3% | 830,578 | 833,278 | 252,901 | 30.4% |
| Board of Elections | 1,063,148 | 1,063,148 | 162,097 | 15.2% | 694,173 | 724,977 | 197,809 | 27.3% |
| County Attorney's Office | 551,501 | 551,501 | 123,147 | 22.3% | 541,000 | 541,000 | 118,145 | 21.8% |
| County Manager's Office | 856,037 | 856,037 | 184,515 | 21.6% | 722,580 | 722,580 | 130,407 | 18.0% |
| Register of Deeds | 924,165 | 924,165 | 187,080 | 20.2% | 903,025 | 903,025 | 248,345 | 27.5% |
| Tax Administration | 3,496,212 | 3,496,212 | 759,780 | 21.7% | 3,361,630 | 3,423,158 | 895,633 | 26.2% |
| **General Government Total** | **7,761,418** | **7,761,418** | **1,663,298** | **21.4%** | **7,052,986** | **7,148,018** | **1,843,240** | **25.8%** |
| **Public Safety** | | | | | | | | |
| Courts | 90,655 | 90,655 | 20,141 | 22.2% | 81,655 | 81,655 | 15,965 | 19.6% |
| Emergency Services | 10,146,314 | 10,147,415 | 2,270,210 | 22.4% | 9,924,769 | 9,987,078 | 2,103,160 | 21.1% |
| Sheriff | 12,678,854 | 12,754,194 | 2,997,991 | 23.5% | 12,014,631 | 12,099,125 | 2,777,274 | 23.0% |
| **Public Safety Total** | **22,915,823** | **22,992,264** | **5,288,342** | **23.0%** | **22,021,055** | **22,167,858** | **4,896,399** | **22.1%** |
| **Human Services** | | | | | | | | |
| Child Support Services | 965,640 | 965,640 | 223,228 | 23.1% | 967,092 | 967,092 | 216,560 | 22.4% |
| Department of Social Services | 18,153,438 | 18,153,438 | 4,934,477 | 27.2% | 17,196,401 | 17,269,984 | 5,237,719 | 30.3% |
| Department on Aging | 1,996,088 | 2,056,443 | 473,182 | 23.0% | 1,896,783 | 1,990,980 | 570,551 | 28.7% |
| Health Department | 8,600,516 | 8,672,591 | 1,873,410 | 21.6% | 7,910,226 | 7,949,195 | 1,754,798 | 22.1% |
| Housing, Human Rights, & Community Development | 218,823 | 218,823 | 45,584 | 20.8% | 210,279 | 210,279 | 51,631 | 24.6% |
| Library Services | 2,081,930 | 2,081,930 | 465,783 | 22.4% | 1,910,714 | 1,910,714 | 438,638 | 23.0% |
| Library Municipal | 568,839 | 568,839 | 142,735 | 25.1% | 568,839 | 568,839 | 284,770 | 50.1% |
| OPC Area Program | 1,355,973 | 1,355,973 | 338,993 | 25.0% | 1,355,973 | 1,355,973 | 677,987 | 50.0% |
| **Human Services Total** | **33,941,247** | **34,073,677** | **8,497,393** | **24.9%** | **32,016,307** | **32,223,056** | **9,232,653** | **28.7%** |
| **Education** | | | | | | | | |
| Current Expenses | 74,097,466 | 74,097,466 | 18,524,366 | 25.0% | 72,147,134 | 72,147,134 | 18,036,784 | 25.0% |
| Fair Funding | 988,000 | 988,000 | 0 | 0.0% | 988,000 | 988,000 | 0 | 0.0% |
| Other Related County Support | 751,875 | 751,875 | 187,969 | 25.0% | 712,280 | 712,280 | 178,070 | 25.0% |
| Recurring Capital | 3,000,000 | 3,000,000 | 750,000 | 25.0% | 3,000,000 | 3,000,000 | 750,000 | 25.0% |
| **Education Total** | **78,837,341** | **78,837,341** | **19,462,335** | **24.7%** | **76,847,414** | **76,847,414** | **18,964,854** | **24.7%** |
| **Support Services** | | | | | | | | |
| Asset Management Services | 4,295,957 | 4,295,957 | 1,168,835 | 27.2% | 4,135,662 | 4,331,917 | 1,293,433 | 29.9% |
| Community Relations | 188,716 | 188,716 | 43,361 | 23.0% | 186,028 | 194,618 | 52,353 | 26.9% |
| Finance & Administrative Services | 3,401,850 | 3,401,850 | 1,525,263 | 44.8% | 3,364,117 | 3,368,807 | 1,631,984 | 48.4% |
| Human Resources | 945,127 | 945,127 | 162,714 | 17.2% | 780,016 | 785,602 | 180,220 | 22.9% |
| Information Technologies | 2,895,229 | 2,895,229 | 1,047,711 | 36.2% | 2,621,580 | 2,662,072 | 918,760 | 34.5% |
| **Support Services Total** | **11,726,879** | **11,726,879** | **3,947,885** | **33.7%** | **11,087,403** | **11,343,016** | **4,076,750** | **35.9%** |
| **Non-Departmental** | | | | | | | | |
| Culture & Recreation | 90,294 | 90,294 | 18,739 | 20.8% | 91,374 | 91,374 | 20,952 | 22.9% |
| Community & Environment | 234,425 | 234,425 | 158,894 | 67.8% | 219,651 | 295,959 | 177,714 | 60.0% |
| General Services | 1,735,518 | 1,735,518 | 494,215 | 28.5% | 1,871,543 | 1,871,543 | 514,945 | 27.5% |
| Governing & Management | 4,046,062 | 4,046,062 | 271,719 | 6.7% | 5,105,948 | 5,124,208 | 383,830 | 7.5% |
| Human Services | 2,462,315 | 2,462,315 | 257,329 | 10.5% | 2,337,980 | 2,337,980 | 225,125 | 9.6% |
| Public Safety | 401,052 | 401,052 | 85,569 | 21.3% | 361,052 | 361,052 | 78,191 | 21.7% |
| Debt Service | 26,913,693 | 26,913,693 | 8,108,384 | 30.1% | 26,529,306 | 26,529,306 | 8,584,799 | 32.4% |
| Transfers to Other Funds | 5,141,513 | 5,410,489 | 0 | 0.0% | 5,179,269 | 5,359,689 | 0 | 0.0% |
| **Non-Departmental Total** | **41,024,872** | **41,293,848** | **9,394,850** | **22.8%** | **41,696,123** | **41,971,111** | **9,985,557** | **23.8%** |
| **Total Expenditures** | **206,776,110** | **207,272,963** | **50,629,148** | **24.4%** | **200,428,111** | **201,545,482** | **51,349,123** | **25.5%** |

*YTD Actuals include Encumbrances

## Revenues and Expenses (1st Quarter)

Summary - Solid Waste Enterprise Fund

| | FY2015-16 | | | | FY2014-15 | | | |
|---|---|---|---|---|---|---|---|---|
| | Original Budget | Revised Budget | YTD Actual* | YTD % Expended | Original Budget | Revised Budget | YTD Actual | YTD % Expended |
| **Revenues** | | | | | | | | |
| Charges for Services | 7,805,439 | 7,805,439 | 1,153,850 | 14.8% | 5,264,960 | 5,264,960 | 936,470 | 17.8% |
| General Govt Revenue | 1,840,518 | 1,840,518 | 462,351 | 25.1% | 4,459,272 | 4,459,272 | 466,493 | 10.5% |
| Intergovernmental | 353,000 | 353,000 | 39,586 | 11.2% | 601,925 | 601,925 | 30,878 | 5.1% |
| Contribution from Equipment Reserves | 1,362,061 | 1,362,061 | 0 | 0.0% | 2,696,893 | 2,696,893 | 0 | 0.0% |
| **Revenues Total** | **11,361,018** | **11,361,018** | **1,655,787** | **14.6%** | **13,023,050** | **13,023,050** | **1,433,841** | **11.0%** |
| **Expenses** | | | | | | | | |
| Personnel | 3,822,663 | 3,822,663 | 855,130 | 22.4% | 3,558,815 | 3,558,815 | 783,244 | 22.0% |
| Operations | 5,296,743 | 5,296,743 | 2,751,614 | 51.9% | 5,231,847 | 6,027,104 | 4,052,124 | 67.2% |
| Recurring Capital | 1,244,137 | 1,244,137 | 940,075 | 75.6% | 3,268,389 | 5,386,503 | 2,491,090 | 46.2% |
| Contribution to Equipment Reserves | 997,475 | 997,475 | 0 | 0.0% | 963,999 | 963,999 | 0 | 0.0% |
| **Expenses Total** | **11,361,018** | **11,361,018** | **4,546,819** | **40.0%** | **13,023,050** | **15,936,422** | **7,326,459** | **46.0%** |

*YTD Actuals include Encumbrances

## Revenues and Expenses (1st Quarter)

Summary - Sportsplex Fund

| | FY2015-16 | | | | FY2014-15 | | | |
|---|---|---|---|---|---|---|---|---|
| | Original Budget | Revised Budget | YTD Actual* | YTD % Expended | Original Budget | Revised Budget | YTD Actual | YTD % Expended |
| **Revenues** | | | | | | | | |
| **Charges for Services** | | | | | | | | |
| Ice Rink | 1,115,385 | 1,115,385 | 229,805 | 20.6% | 1,126,360 | 1,126,360 | 283,986 | 25.2% |
| Aquatic | 436,000 | 436,000 | 126,011 | 28.9% | 327,400 | 327,400 | 117,750 | 36.0% |
| Kidsplex | 384,010 | 384,010 | 100,541 | 26.2% | 412,800 | 412,800 | 108,717 | 26.3% |
| Membership and Fitness | 1,051,528 | 1,051,528 | 252,833 | 24.0% | 970,300 | 970,300 | 233,054 | 24.0% |
| Other Income | 183,077 | 183,077 | 25,948 | 14.2% | 192,950 | 192,950 | 33,455 | 17.3% |
| **Charges for Services Total** | **3,170,000** | **3,170,000** | **735,138** | **23.2%** | **3,029,810** | **3,029,810** | **776,962** | **25.6%** |
| **Appropriated Fund Balance Total** | **106,278** | **106,278** | **0** | **0.0%** | **202,926** | **427,926** | **0** | **0.0%** |
| **Transfer from General Fund Total** | **0** | **0** | **0** | **0.0%** | **376,450** | **376,450** | **0** | **0.0%** |
| **Revenues Total** | **3,276,278** | **3,276,278** | **735,138** | **22.4%** | **3,609,186** | **3,834,186** | **776,962** | **20.3%** |
| **Expenses** | | | | | | | | |
| Personnel | 1,177,868 | 1,177,868 | 271,681 | 23.1% | 1,147,706 | 1,147,706 | 236,006 | 20.6% |
| Operations | 2,098,410 | 2,098,410 | 541,863 | 25.8% | 2,041,480 | 2,063,151 | 687,214 | 33.3% |
| Recurring Capital | 0 | 128,995 | 128,995 | 0.0% | 420,000 | 2,024,246 | 430,246 | 21.3% |
| **Expenses Total** | **3,276,278** | **3,405,273** | **942,539** | **27.7%** | **3,609,186** | **5,235,103** | **1,353,467** | **25.9%** |

*YTD Actuals include Encumbrances

Attachment 3

# THE NORTH CAROLINA ECONOMIC OUTLOOK

## THIRD QUARTER 2015

Prepared by Dr. Michael L. Walden, William Neal Reynolds Distinguished Professor, Department of Agricultural and Resource Economics, North Carolina State University

Contact Methods: phone: 919-515-4671; e-mail: michael_walden@ncsu.edu

## Executive Summary: Third Quarter of the Recovery

**To use a sports analogy, economic recoveries from recessions can be divided into four quarters. The first quarter occurs with the economy hitting bottom and finally turning around and generating growth. Negatives become positives (or, in football terms, negative yardage is turned into positive yardage). Most measures are still below their pre-recessionary peaks, but the economy is moving forward. Yet issues persist with jobless rates remaining high and wage gains non-existent.**

**Quarter two sees economic gains accelerate to the point that many measures, most notably employment and aggregate production (GDP) regain and then exceed their pre-recessionary levels. However, wage and income growth still lag as lingering large numbers of unemployed workers curtail any gains in compensation.**

**The economic game plan really takes shape in the third quarter. Hiring continues, the ranks of the unemployed shrink, and wage and income increases begin to occur. Both business and consumer confidence are high and prospects for the future brighten.**

**The economic recovery comes to an end in the fourth quarter. Due to many possible reasons – tight labor markets, rapid inflation, or investment bubbles – the recovery begins to wind down. The end can come rapidly or slowly, but whichever way, the economy eventually moves into another recession.**

**The economy is now in the third quarter. The recovery – which is in its sixth year – will continue. Production, jobs, wages, and incomes will all improve in 2015, both in the nation and in North Carolina. Unemployment rates will trend lower, but improvements will be modest as individuals who previously stopped looking for work – and therefore were not counted as unemployed by the "headline" jobless rate – will re-enter the labor force.**

**In the nation, nonfarm payrolls will increase 2.5%, generating 3.6 million jobs. In North Carolina, nonfarm payrolls will also improve by 2.5%, resulting in 105,000 additional payroll jobs. Wages in both the nation and the state will begin to accelerate their gains.**

**Within North Carolina, the fastest growing regions will continue to be the larger metropolitan areas, particularly those in an arc from the Triangle west to the Triad and south to Charlotte. Several regions – mainly in the eastern section of the state - continue to struggle – having very low or negative job growth.**

## The Nation: Another Positive Year

The broadest measure of economic activity for the nation – real (inflation-adjusted) Gross Domestic Product (GDP) - continued climbing in 2014 and early 2015 (Figure 1). Winter storms caused GDP to fall in the first quarter of 2015, but subsequent monthly data indicate a bounce-back. Aided by continuing modest gas prices, consumers appear to be lifting their spending.

The employment market followed the pace of GDP. Payroll jobs were added at a faster pace in 2014, and by early 2015 payroll employment topped 142 million, the highest ever (Figure 2). All measures of the national unemployment rate – varying by how unemployment is defined - also dropped to post-recessionary lows (Figure 3).

**Figure1. U.S. Real Gross Domestic Product (2009 $ trillions)**

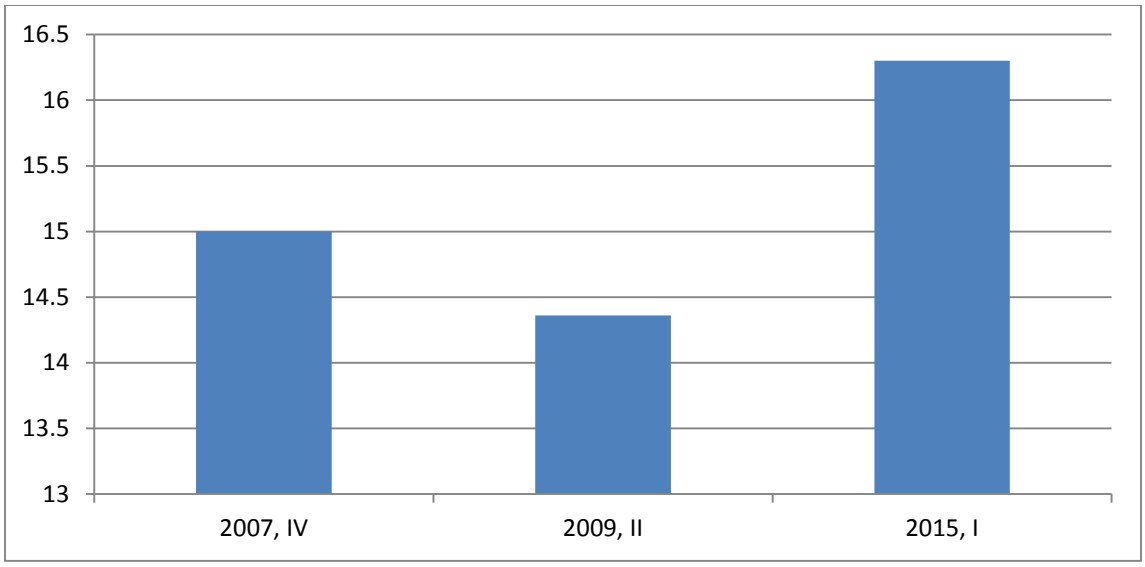


Source: U.S. Department of Commerce.

**Figure 2. National Employment (millions, establishment survey, seasonally-adjusted)**

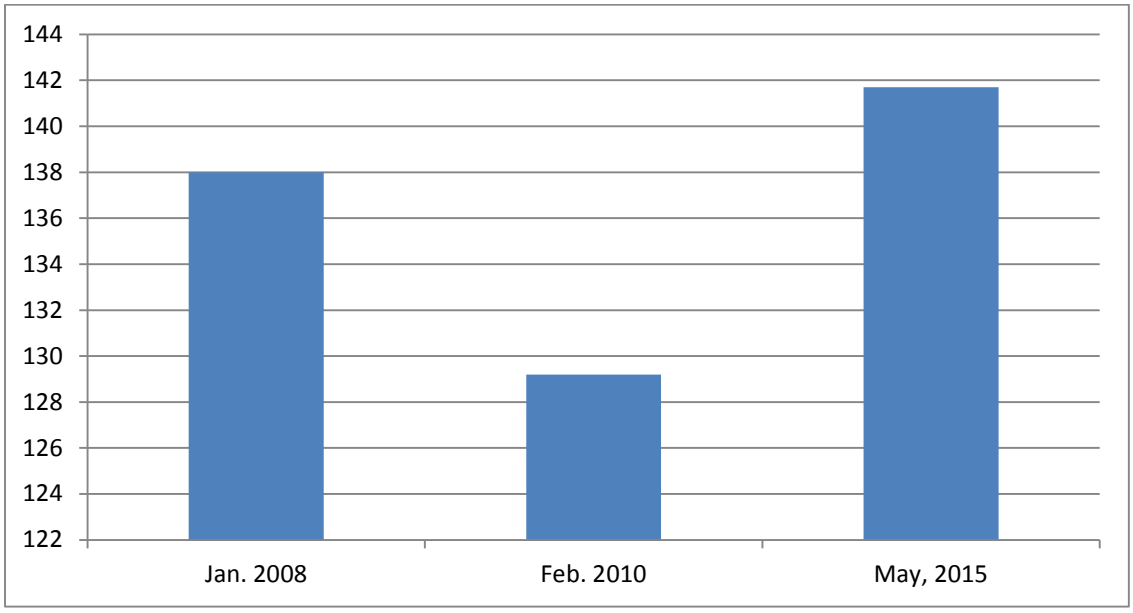


Source: U.S. Department of Commerce.

**Figure 3. National Unemployment Rates (%)**

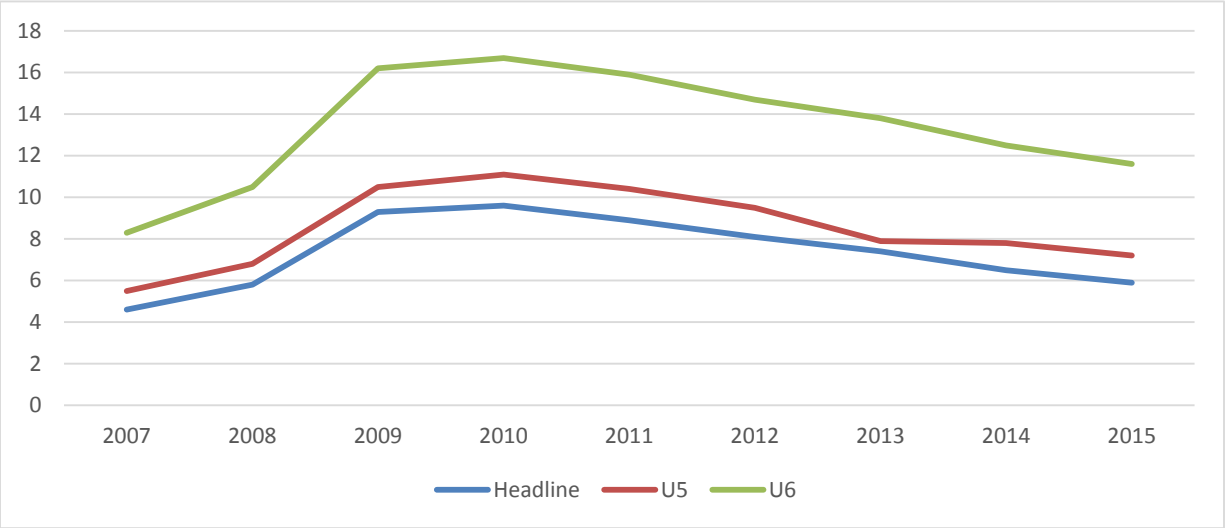


Source: U.S. Dept. of Commerce. The "headline" rate excludes as unemployed individuals who have not looked for a job in the last month. U5 includes such individuals as unemployed, and U6 further adds part-time workers who cannot find full-time work as being unemployed.

**Figure 4. Trends in the Housing Market.**

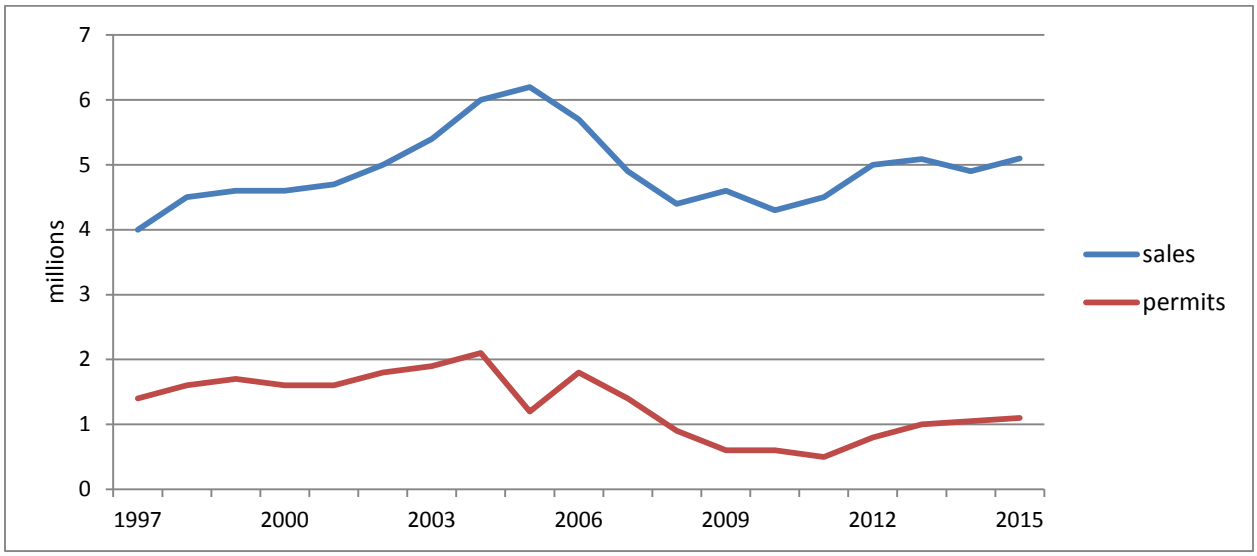


Source: National Association of Realtors; U.S. Census; 2015 data are annualized through May.

However, the nation's labor force participation rate – defined as the proportion of adults working or actively looking for work – still stayed at 30-year lows in 2014. The continuing retirement of baby boomers and the increased time of young adults in post-secondary education are parts of the explanation that are not troubling. Troubling is inadequate skills possessed by some potential workers. However, in early 2015 the labor force participation rate made modest gains.

The housing market continued to improve in 2014 and early 2015 (Figure 4), yet with sales and construction (permits) levels still far below pre-recessionary highs. The market is ultimately driven by young buyers, and many of the millennial generation (those born between 1980 and 2004) have not yet shifted to buying from renting as they stay in school longer and deal with college debt. There is also continuing concern about the ability of small contractors to obtain loans.

There is some suggestion the overall inflation rate (including prices of all consumer goods and services) may be accelerating (Figure 5). It is logical to see greater price pressures as the economic recovery moves in to its sixth year. Still, the annualized level in 2015 (2.4%) is moderate and eases worries associated with potential deflation.

Possibly reflecting higher inflationary expectations, long-term interest rates edged higher in late 2014 and early 2015 (Figure 6). The trend can also be interpreted as a positive sign if the increase reflects improved loan demand. Additionally, as interest rates earned on loans rise, banks will be more motivated to dip into their substantial reserves and make them available for further lending.

## National Outlook: The Recovery Continues

All signs point to another year of economic growth in the nation in 2015. Although real GDP growth was negative in the first quarter due to weather conditions, it is predicted that growth will be rigorous enough in the remaining quarters to result in an annual real GDP growth rate for 2015 of between 2.75% and 3.0%. If accurate, this would be the strongest improvement in real GDP since 2005.

**Figure 5. Total Inflation Rate at the Retail Level (Consumer Price Index)**

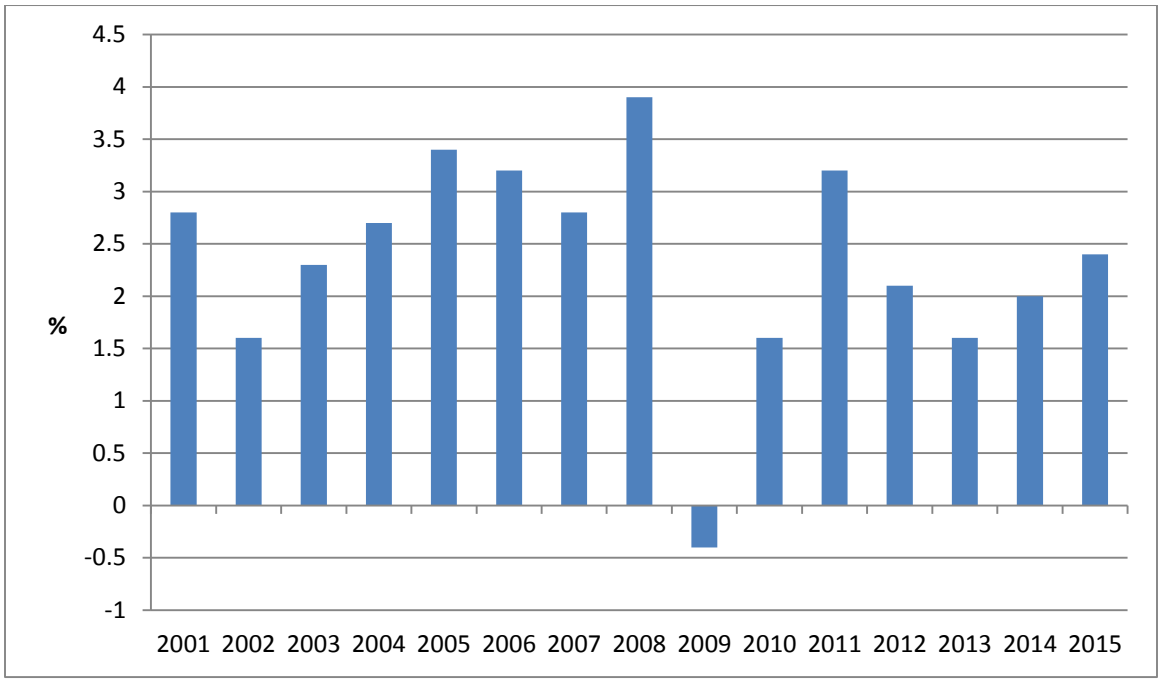


Source: U.S. Department of Commerce. 2015 is annualized change through May.

**Figure 6. Trends in Short-Term and Long-Term Interest Rates (U.S. Treasury Security rates)**

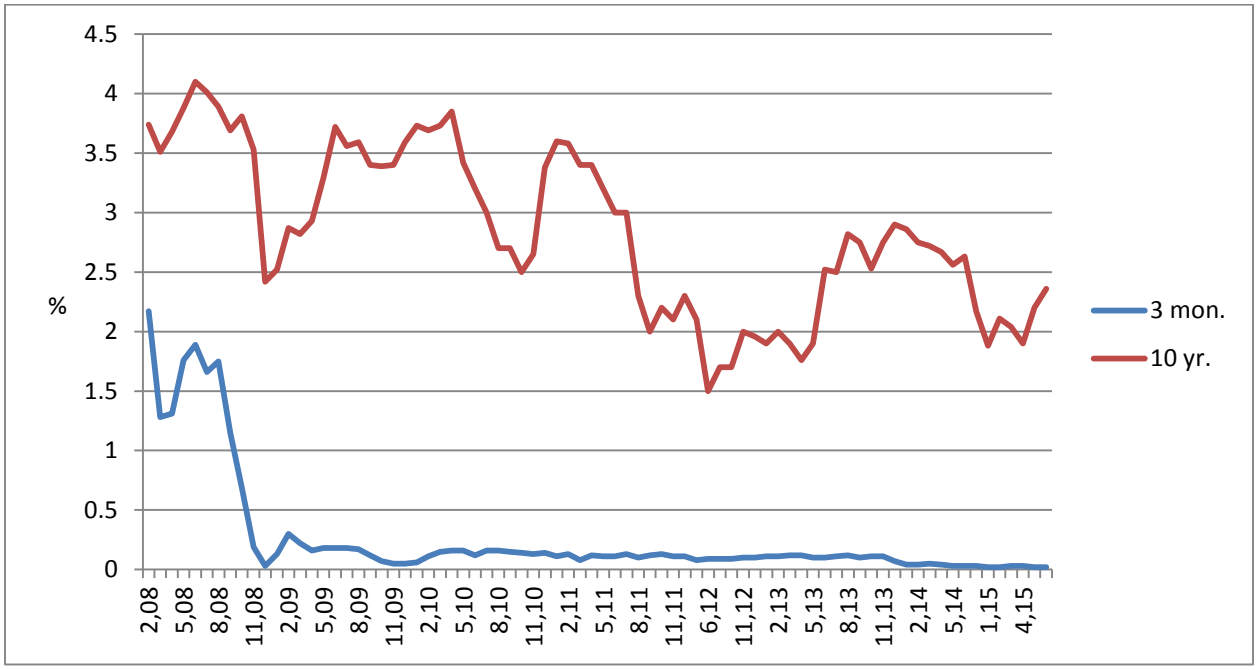


Source: Board of Governors of the Federal Reserve.

The key elements behind this growth forecast are job growth, improved worker wages, the lessening of debt constraints, moderate inflation, and pent-up demand.

Nonfarm payroll job growth has improved in each year since the job recovery began in 2010, rising from 1.6% in 2011 to 1.7% in 2012 to 1.8% in 2013 and to 2.3% in 2014. It is expected this trend will continue in 2015, with nonfarm payroll job growth improving by 2.5%. This will translate into 3.6 million additional jobs nationwide and will be a major impetus to economic growth during 2015.

Worker wages (earnings per hour) have also been improving at better rates in recent years. Average nominal worker wages gained only 1.4% in 2013, but rose 2.1% in 2014 and in the first five months of 2015 are rising at an annual rate of 2.3%. As job growth accelerates and the pool of unemployed workers shrinks, wage gains should accelerate, posting an expected 2.5% improvement in 2015. Combined with the increase in jobs, this gives a powerful boost to consumer spending power and economic growth.

Households have worked hard to reduce debt levels since the recession. The ratio of household debt to household disposable income has risen for five consecutive years. Households now devote only 10% of their disposable income to debt service, down from 13% prior to the Great Recession. With debt payments less of a burden, households have more resources to devote to spending.

Although both inflation and long-term interest rates have trended upward, they are not at levels that will impinge the economic recovery. Also, both are well below their pre-recessionary levels. It is widely thought the Federal Reserve will increase the short-term interest rates it controls sometime in late 2015 or early 2016. However, the hike is expected to be contained (0.25 percentage points) and will signal the Fed's confidence in the economic recovery.

The last generator of continued economic growth in 2015 will be pent-up demand. The Great Recession and relatively slow recovery motivated many households to postpone purchasing big-ticket, durable items. For example, purchases of vehicles and vehicle parts in the nation were up only 2.4% in 2014 from 2007, despite the fact that the number of households increased 6% during the same period. As households feel more confident about the economy, purchase of durable products will increase – thereby adding another element of growth to the economy.

Of course, there are always cautions and potential dangers for the economy. Labor productivity has flattened in recent years. This is a concern because research shows long-run gains in the economy – and specifically to workers' standard of living – only occur when labor productivity is improving. The absence of recent gains in labor productivity suggests potential problems in worker training and in the skill sets of some workers.

International issues are always "wild cards" for economic forecasts, and in 2015 there is no shortage of international concerns. These include geopolitical confrontations in eastern Europe (Ukraine), the Middle East (Iraq, ISIS), southeast Asia (China's expansion in the South China Sea), and northeast Asia (North Korea). Any of the situations could reach the level of disrupting both the world and U.S. economies.

There are also issues of economic growth in Europe, China, and Japan which, with the U.S., compose the bulk of economic activity in the world. Europe has issues of slow growth and of maintenance of the Euro currency. China's economic growth has significantly slowed, and some worry of a recession created by over-investment in real estate. Japan has had a decades' long problem with slow economic growth and a rapidly aging population. All could have adverse impacts on the U.S. economy.

## North Carolina: Is Progress Stalling?

Like the nation, job growth in North Carolina improved in 2014 (Figure 7) and the alternative measures of unemployment all declined (Figure 8). But some worries have begun to emerge.

First, as indicated in Figure 7, payroll job growth in the first five months of 2015 has been running at an annual rate slightly behind 2014. However, the same pattern is seen at the national level and is, again, likely due to the adverse effects of the bad winter weather.

Perhaps a more important worry is the performance of real GDP. The gain in the state's real GDP in 2014 was only little more than half the gain in 2013 (1.4% in 2014 and 2.7% in 2013). Further, North Carolina's 2014 improvement (1.4%) was substantially under the national increase of 2.2%.

**Figure 7. North Carolina Annual Payroll Job Gains (number)**

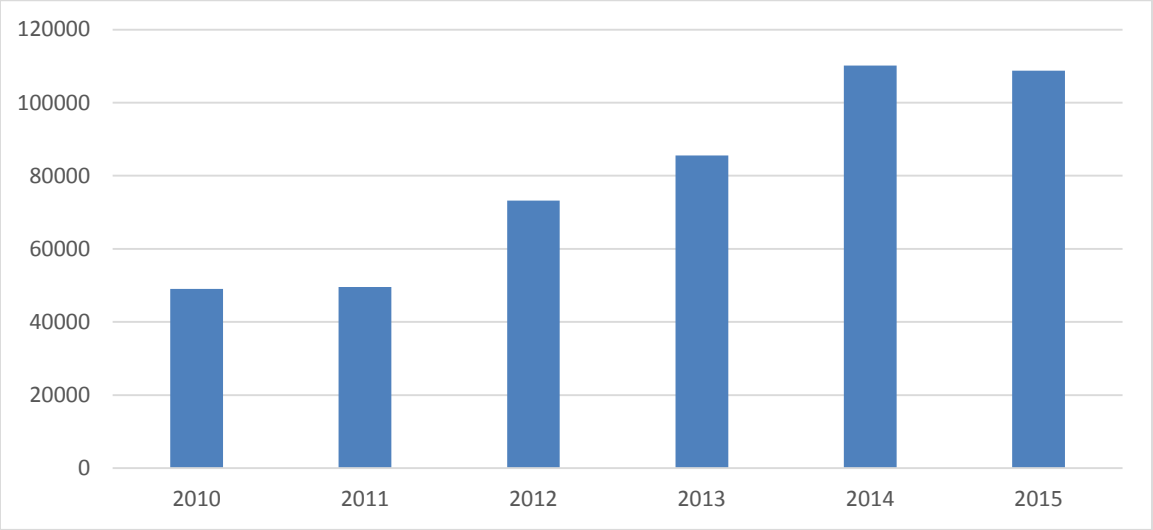


Source: U.S. Department of Commerce. 2015 is May 2014 to May 2015.

**Figure 8. North Carolina Unemployment Rates**

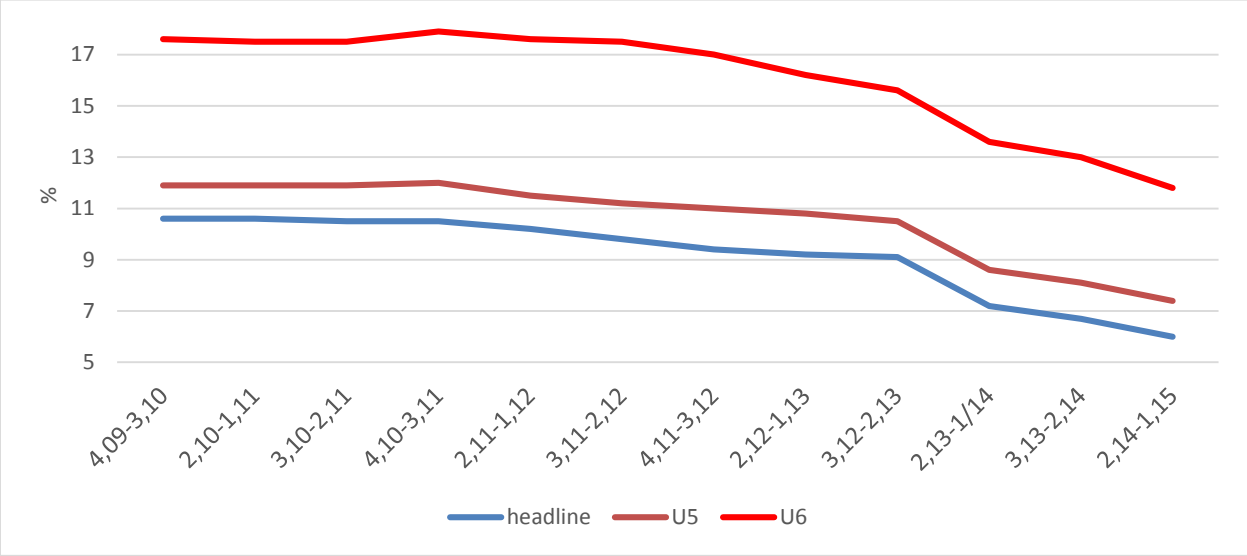


Source: U.S. Department of Commerce.

Fortunately, there is a logical explanation for the state's GDP trends. Manufacturing is still more dominant in North Carolina than in the nation. The share of total GDP contributed by manufacturing is 20% in North Carolina and 11% in the nation. Over half of domestic manufacturing output is exported. As the dollar's international value significantly strengthened in 2014, exports to foreign buyers stalled. As a result, North Carolina's factories showed no gain in their value of output in 2014 compared to 2013. This held down North Carolina's GDP gains in 2014, and did so to a greater extent in North Carolina than in the nation due to the state's heavier reliance on manufacturing.

A more worrisome trend in North Carolina is the slow pace of wage gains. In 2013, 2014, and thus far (through May) in 2015, average nominal worker wage gains in North Carolina have underperformed those in the nation. For example, in 2013, average nominal wages increased 1.4% in the nation but fell 1% in North Carolina. In 2014 U.S. average nominal wages improved 2.1%, yet in North Carolina the gain was 0.4%. From May 2014 to May 2015, national average nominal wages are up 2.3% compared to North Carolina's increase of 2.2%. So the gap has recently narrowed, but it still bears watching.[1]

## North Carolina State and Regional Forecasts

The NCSU Index of North Carolina Leading Economic Indictors is designed to project the growth path in the state's economy. The Index (Figure 9) shows a decline (on-trend) since spring, 2014. Hence, the Index correctly forecast the recent slowing of growth in both real GDP and payroll employment compared to levels in 2013.

Still, real GDP and nonfarm payrolls will increase for the remainder of 2015. Real GDP is forecasted to improve by between 2.5% and 2.75%, and nonfarm payrolls are expected to rise by 2.5% - the same rate as the nation. This will tranlate to 105,000 additional payroll jobs in the state. The headline unemployment rate – registering 5.7% in May – will fall to 5.5% by year's end. The reduction in the headline jobless rate will be cushioned by the return of "discouraged workers" as the labor market improves.

[1] The pattern is repeated for per capita disposable income. In 2013 per capita disposable income in the nation rose 0.3%, but in North Carolina it fell 0.5%. In 2014, the gain in per capita disposable income was 2.9% in the nation and 2.5% in North Carolina.

**Figure 9. NCSU Index of North Carolina Leading Economic Indicators**

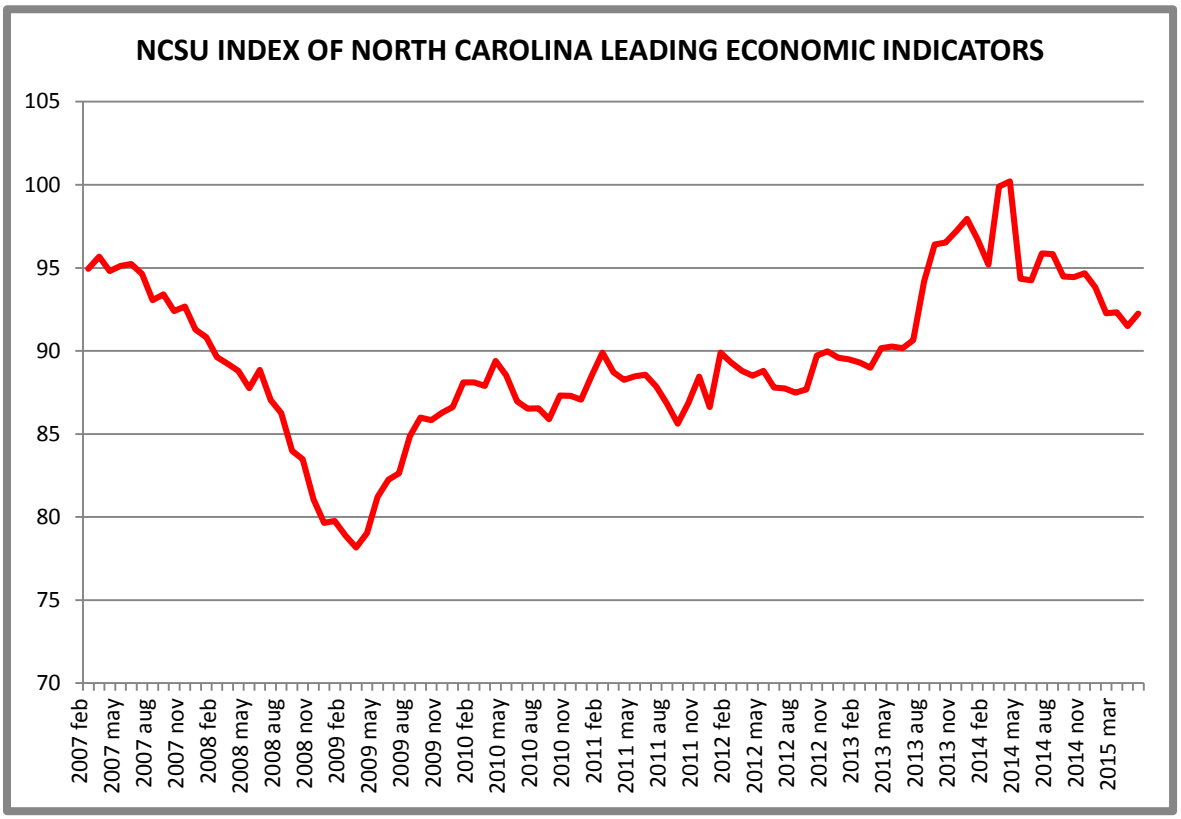


Source: author's calculations.

Table 1 gives the most recent annual payroll job growth rate for North Carolina's metropolitan areas, the most recent headline unemployment rate (April 2015) for the areas, and the forecasted end-of-the-year headline unemployment rate (December 2015) for the metropolitan areas. Looking at the job growth rates, the pattern that has been observed in recent years continues. The fastest job growth rates are in the larger metropolitan areas (Burlington, Charlotte, Greensboro/High Point, and Raleigh/Cary), while the slowest growth rate (including negative growth rates) are in the smaller metro areas and are particularly in the eastern section of the state (Fayetteville, Goldsboro, Greenville, Jacksonville, New Bern, and Rocky Mount). Looked at from a large geographic perspective, the most rapid job growth in North Carolina is occurring in an arc from the Triangle west to the Triad and south to Charlotte.

**Table 1. End-of-Year Unemployment Rate Forecasts, % (not seasonally-adjusted)**

| | | "Headline" Unemployment Rate[2] | |
|---|---|---|---|
| **Region** | **2015 Job Growth[1]** | **April 2015** | **Forecasted, Dec. 2015** |
| Asheville | 2.9% | 4.1 | 3.9 |
| Burlington | 4.4% | 4.7 | 4.6 |
| Charlotte | 3.3% | 5.1 | 4.8 |
| Durham-Chapel Hill | 1.5% | 4.4 | 4.0 |
| Fayetteville | 0.0% | 6.8 | 6.7 |
| Goldsboro | -0.2% | 5.6 | 5.6 |
| Greensboro-High Point | 3.5% | 5.3 | 5.2 |
| Greenville | 0.0% | 5.5 | 5.5 |
| Hickory | 0.9% | 5.3 | 5.3 |
| Jacksonville | 1.0% | 5.2 | 5.2 |
| New Bern | 0.0% | 5.7 | 5.7 |
| Raleigh-Cary | 3.0% | 4.3 | 4.1 |
| Rocky Mount | -0.4% | 7.9 | 7.9 |
| Wilmington | 1.8% | 4.9 | 4.7 |
| Winston-Salem | 1.6% | 4.9 | 4.8 |
| State | 2.6% | 5.5 | 5.5 |

[1] May 2014 to May 2015, seasonally-adjusted; [2]not seasonally-adjusted

Source: U.S. Dept. of Commerce and author's forecasts.

Modest changes are forecasted in the rates as regions with substantial job growth will likely see a countering increase in their labor force from the re-entry of discouraged workers. At the end of 2015, it is expected that Asheville, Durham-Chapel Hill, and Raleigh-Cary will have the lowest state jobless rates.

**DRAFT**

**INFORMATION ITEM**

Date Prepared: 11/19/15
Date Revised: 12/02/15

# BOCC Meeting Follow-up Actions

(Individuals with a * by their name are the lead facilitators for the group of individuals responsible for an item)

| Meeting Date | Task | Target Date | Person(s) Responsible | Status |
|---|---|---|---|---|
| 11/17/15 | Review and consider request by Commissioner Dorosin that the County pursue offering Spanish Language Training to employees free of charge | 3/1/2016 | Brenda Bartholomew Bonnie Hammersley | Staff to look at opportunities for expansion of current program |
| 11/17/15 | Review and consider request by Commissioner Rich that the County move forward with ordinance changes to include provisions for tiny houses | 3/1/2016 | Craig Benedict Audrey Spencer-Horsley | Staff to pursue; Regulations review to be part of Affordable Housing Plan |
| 11/17/15 | Review and consider request by Commissioner Rich that the County review the current ordinance provisions addressing food trucks and consider updates to make them more relevant to current needs | 3/1/2016 | Craig Benedict | Staff to follow-up |
| 11/17/15 | Review and consider request by Commissioner Jacobs that the staff follow-up on a previous request regarding noise ordinance enforcement | 3/31/2016 | Travis Myren, Craig Benedict, Michael Harvey, Dinah Jeffries & Jason Shepherd | County Attorney noted that Staff group has met to discuss ways to address private fireworks displays and noise ordinance; Planned for Spring 2016 work session discussion |
| 11/17/15 | Review and consider request by Commissioner Jacobs that staff develop a guide to reference as needed regarding farm uses and how they are allowed | 3/31/2016 | Craig Benedict, David Stancil, Gail Hughes | To be pursued; Farm Service Agency may be helpful with development of the reference guide |
| 11/17/15 | Take steps necessary to begin the planning and construction of the Mountains to Sea Trail (MST) in Orange County | 3/15/2016 | David Stancil | Provide an established timeline outlining the intended process |
| 11/17/15 | Provide BOCC with copies of the Mountains to Sea Trail Powerpoint presentation | 12/7/2015 | David Stancil | Copies to be provided |
| 11/17/15 | Continue work on County Living Wage initiative, bring back additional information, and provide analysis on potential impacts to non-profits the County contracts with | 5/31/2016 | Travis Myren John Roberts | Work to continue and information to be brought back in the FY 2016-17 budget process |

**INFORMATION ITEM**

# Tax Collector's Report - Numerical Analysis

**Effective Date of Report: November 19, 2015**

| Tax Year 2015 | Amount Charged in FY 15-16 | Amount Collected | Accounts Receivable | Amount Budgeted in FY 15-16 | Remaining Budget | % of Budget Collected |
|---|---|---|---|---|---|---|
| Current Year Taxes | $ 136,413,322.00 | 40,736,749.08 | $ 96,697,949.73 | $ 136,413,322.00 | $ 95,676,572.92 | 29.86% |
| Prior Year Taxes | $ 3,551,444.86 | 576,850.25 | $ 2,886,444.00 | $ 1,150,000.00 | $ 573,149.75 | 50.16% |
| **Total** | $ 139,964,766.86 | 41,313,599.33 | $ 99,584,393.73 | $ 137,563,322.00 | $ 96,249,722.67 | **30.03%** |

| Tax Year 2014 | Amount Charged in FY 14-15 | Amount Collected | Accounts Receivable | Amount Budgeted in FY 14-15 | Remaining Budget | % of Budget Collected |
|---|---|---|---|---|---|---|
| Current Year Taxes | $ 135,734,649.00 | 38,744,422.63 | $ 96,903,715.39 | $ 135,734,649.00 | $ 96,990,226.37 | 28.54% |
| Prior Year Taxes | $ 3,764,940.44 | 778,801.41 | $ 2,959,488.73 | $ 994,130.00 | $ 215,328.59 | 78.34% |
| **Total** | $ 139,499,589.44 | 39,523,224.04 | $ 99,863,204.12 | $ 136,728,779.00 | $ 97,205,554.96 | **28.91%** |

| | |
|---|---|
| Current Year Overall Collection Percentage Tax Year 2015 | 29.70% |
| Current Year Overall Collection Percentage Tax Year 2014 | 28.65% |

# INFORMATION ITEM

## Tax Collector's Report - Measures of Enforced Collections

***Fiscal Year 2015-2016***

**Effective Date of Report: October 31, 2015**

| | July | August | September | October | November | December | January | February | March | April | May | June | YTD |
|---|---|---|---|---|---|---|---|---|---|---|---|---|---|
| Wage garnishments | 26 | 11 | 127 | 94 | | | | | | | | | 258 |
| Bank attachments | 12 | 6 | 27 | 3 | | | | | | | | | 48 |
| Certifications | - | - | 2 | - | | | | | | | | | 2 |
| Rent attachments | - | - | - | - | | | | | | | | | - |
| Housing/Escheats/Monies | 4 | - | 4 | 6 | | | | | | | | | 14 |
| Levies | 1 | - | 8 | 1 | | | | | | | | | 10 |
| Foreclosures initiated | - | - | 1 | 1 | | | | | | | | | 2 |
| NC Debt Setoff collections | $ 799.74 | $ 833.06 | $ 684.47 | $ 143.15 | | | | | | | | | 2,460 |

**This report shows the Tax Collector's efforts to encourage and enforce payment of taxes for the fiscal year 2015-2016. It gives a breakdown of enforced collection actions by category, and it provides a year-to-date total.**

**The Tax Collector will update these figures once each month, after each month's reconciliation process.**

Delegation of Authority per NCGS 105-381
To Finance Officer

**INFORMATION ITEM - RELEASES AND REFUNDS UNDER $100**
**DECEMBER 7, 2015**

| NAME | ABSTRACT NUMBER | BILLING YEAR | ORIGINAL VALUE | ADJUSTED VALUE | TAX | FEE | FINANCIAL IMPACT | REASON FOR ADJUSTMENT | TAX CLASSIFICATION | ACTION | Approved by CFO |
|---|---|---|---|---|---|---|---|---|---|---|---|
| Bardsley, Philip E | 277272 | 2015 | 165,331 | 161,831 | (58.65) | | (58.65) | Assessed in error (illegal tax) | Personal | Approved | 11/9/2015 |
| Brown, Jeffrey Donald | 23032977 | 2015 | 13,780 | 12,163 | (25.19) | | (25.19) | Price paid (appraisal appeal) | RMV-VTS | Approved | 11/11/2015 |
| Celedon, Araceli | 1054352 | 2015 | 3,190 | 0 | (32.24) | | (32.24) | Double billed (illegal tax) | Personal | Approved | 10/21/2015 |
| Clack, Bette Lee Walker | 144028 | 2015 | 2,670 | 1,230 | (14.56) | | (14.56) | Assessed in error (illegal tax) | Personal | Approved | 10/28/2015 |
| Courtney, Ashley | 28690308 | 2015 | 7,450 | 6,556 | (14.99) | | (14.99) | High mileage (appraisal appeal) | RMV-VTS | Approved | 11/19/2015 |
| Cullen, Bryan | 28525159 | 2015 | 12,470 | 12,470 | (61.09) | (30.00) | (91.09) | Situs error (illegal tax) | RMV-VTS | Approved | 10/28/2015 |
| Durbin, Michael Patrick | 8598688 | 2014 | 18,400 | 14,352 | (67.84) | | (67.84) | High mileage (appraisal appeal) | RMV-VTS | Approved | 11/19/2015 |
| Forrest, Christopher R | 21569325 | 2014 | 7,140 | 7,140 | (51.70) | (30.00) | (81.70) | Situs error (illegal tax) | RMV-VTS | Approved | 11/19/2015 |
| Garner, Linda | 240373 | 2015 | 5,960 | 0 | (62.80) | | (62.80) | Not in Orange County Jan 1st (illegal tax) | Personal | Approved | 10/28/2015 |
| Garner, Linda | 240373 | 2014 | 6,230 | 0 | (64.91) | | (64.91) | Not in Orange County Jan 1st (illegal tax) | Personal | Approved | 10/28/2015 |
| Hair Works Efland Beauty Salon | 268001 | 2015 | 821 | 821 | (5.51) | | (5.51) | Situs correction (clerical error) | Personal | Approved | 10/21/2015 |
| Krisztina Kozmetika Inc. | 1057595 | 2015 | 15,733 | 10,845 | (81.92) | | (81.92) | Listed in error (illegal tax) | Personal | Approved | 11/9/2015 |
| Matista, Kate Broome | 27390867 | 2015 | 7,910 | 6,644 | (12.18) | | (12.18) | High mileage (appraisal appeal) | RMV-VTS | Approved | 11/19/2015 |
| McFarland, Nelan | 990884 | 2015 | 4,340 | 0 | (41.15) | | (41.15) | Property sold (illegal tax) | Personal | Approved | 11/9/2015 |
| Nix, Nikki | 1054165 | 2015 | 2,100 | 0 | (22.13) | | (22.13) | Double billed (illegal tax) | Personal | Approved | 10/28/2015 |
| Park, Andrew Culbreth | 21005708 | 2014 | 9,480 | 7,200 | (36.72) | | (36.72) | High mileage (appraisal appeal) | RMV-VTS | Approved | 11/9/2015 |
| Prince-Wearing, Pamela | 1057849 | 2015 | 4,030 | 0 | (42.19) | | (42.19) | Double billed (illegal tax) | Personal | Approved | 10/28/2015 |
| Prince-Wearing, Pamela | 1057849 | 2015-2014 | 4,570 | 0 | (52.17) | | (52.17) | Double billed (illegal tax) | Personal | Approved | 10/28/2015 |
| Sanford, Katherine Karn | 28696374 | 2015 | 1,660 | 1,494 | (2.77) | | (2.77) | High mileage (appraisal appeal) | RMV-VTS | Approved | 11/9/2015 |
| Sim, Hyeong J | 301762 | 2015 | 167,605 | 167,255 | (6.20) | | (6.20) | Assessed in error (illegal tax) | Personal | Approved | 10/28/2015 |
| White, Carter Jr | 121302 | 2015 | 3,152 | 0 | (30.31) | | (30.31) | Assessed in error (clerical error) | Personal | Approved | 10/28/2015 |
| | | | | | | **Total** | **$ (847.22)** | | | | |

October 15, 2015 thru
November 18, 2015

**PLANNING & INSPECTIONS DEPARTMENT**
**Craig N. Benedict, AICP, Director**

**Administration**
**(919) 245-2575**
**(919) 644-3002 (FAX)**
**www.orangecountync.gov**

ORANGE COUNTY
NORTH CAROLINA

**131 W. Margaret Lane**
**Suite 201**
**P. O. Box 8181**
**Hillsborough, NC 27278**

# MEMORANDUM

**TO:** Board of County Commissioners
Bonnie B. Hammersley, County Manager

**FROM:** Abigaile Pittman, Transportation/Land Use Planner
Craig Benedict, Planning Director

**CC:** OUTBoard

**DATE:** November 18, 2015

**SUBJECT:** INFORMATION ITEM – Mebane Comprehensive Transportation Plan Project Including the Mattress Factory Road Interchange

---

On November 5th the City of Mebane released a Request for Proposals (RFP) to engage a qualified private engineering and design firm or team for transportation planning services for a Comprehensive Transportation Plan (CTP). The project scope of services includes developing a comprehensive program of transportation improvements over a 10 to 20 period, including facilities, recommendations, and alternatives for the Mebane transportation system. Included in the scope of the project is the Mattress Factory Road interchange, located both in Orange County's and Mebane's jurisdictions.

In November 2012 an Interchange Analysis and Corridor Study was completed for Mattress Factory Road. The report was a preliminary feasibility study to determine the effects of a potential interchange on the roadway network immediately surrounding the interchange. The scope of the study provided a conceptual interchange design, which included roadway configuration and potential right-of-way needs. Orange County staff has had concerns about the impact of the conceptual connections to the County's economic development area to the east, and has been suggesting that this design be re-visited.

Inclusion of the Mattress Factory Road interchange in this current project evolved in part from joint discussions earlier this year. In June, Planning staff met with City of Mebane staff to review Orange County's interest in working with Mebane to identify and protect future interchange access from Mattress Factory Road. The County has been

examining revisions to its access management plan for our nearby economic development area that will make connections via service roads to the Mattress Factory Road interchange. As development proposals come forward in this area in and around the 'future' Mattress Factory Interchange, the two jurisdictions should cooperate to develop a plan for a mutually agreeable alignment of the future feeder road system. NCDOT can find money easier when right-of-way and conceptual design has been accomplished.

The Burlington-Graham Metropolitan Planning Organization (BGMPO) has prioritized this project to develop recommendations for better integration of transportation modes in existing and future transportation corridors in Mebane. Funding sources for the planning effort include the Federal Highway Administration (FHWA) ($20,000) and the City of Mebane ($30,000).

The estimated completion date for the project is June 30, 2016. No funds are being requested from Orange County; however, staff will be consulted during the course of project development. Staff will keep the Manager and Commissioners informed regarding progress on this project and plans for the Mattress Factory Road interchange.

Mattress Factory Road 'Future' Interchange

**INFORMATION ITEM**

*Earl McKee, Chair*
*Bernadette Pelissier, Vice Chair*
*Mia Burroughs*
*Mark Dorosin*
*Barry Jacobs*
*Renee Price*
*Penny Rich*

**Orange County Board of Commissioners**
**Post Office Box 8181**
**200 South Cameron Street**
**Hillsborough, North Carolina 27278**

December 2, 2015

Dear Commissioners,

At the Board's November 17, 2015 regular meeting, petitions were brought forth which were reviewed by the Chair/Vice Chair/Manager Agenda team. The petitions and responses are listed below:

1) Review and consider a request by Commissioner Dorosin that the County pursue offering Spanish Language Training to employees free of charge.

***Response:*** Staff to look at opportunities for expansion of current program.

*2)* Review and consider a request by Commissioner Rich that the County move forward with ordinance changes to include provisions for tiny houses.

***Response:*** Staff to pursue; Regulations review to be part of Affordable Housing Plan.

*3)* Review and consider a request by Commissioner Rich that the County review the current ordinance provisions addressing food trucks and consider updates to make them more relevant to current needs.

***Response***: Staff to follow-up.

*4)* Review and consider a request by Commissioner Jacobs for staff to follow up on a previous request regarding the noise ordinance enforcement.

***Response:*** County Attorney noted that Staff group has met to discuss ways to address private fireworks displays and noise ordinance; Planned for Spring 2016 work session discussion.

***5)*** Review and consider a request by Commissioner Jacobs for staff to develop a guide to reference as needed regarding farm uses and how they are allowed.

***Response:*** To be pursued; Farm Service Agency may be helpful with development of the reference guide.

Earl McKee

Earl McKee, Chair
Orange County Board of Commissioners