LESSEE:

T-Mobile

**185 FAIRCHILD STREET**
**CHARLESTON, SC 29492**

**T-MOBILE SITE ID: 5RA0532D**
**5022 KERLEY ROAD**
**DURHAM, NC 27705**
**(ORANGE COUNTY)**

PLANS PREPARED FOR:

SKYWAY TOWERS

**20525 AMBERFIELD DRIVE, ST 102**
**LAND O' LAKES, FL 34639**

**ERWIN ROAD**
**SKYWAY SITE #: NC-08828**

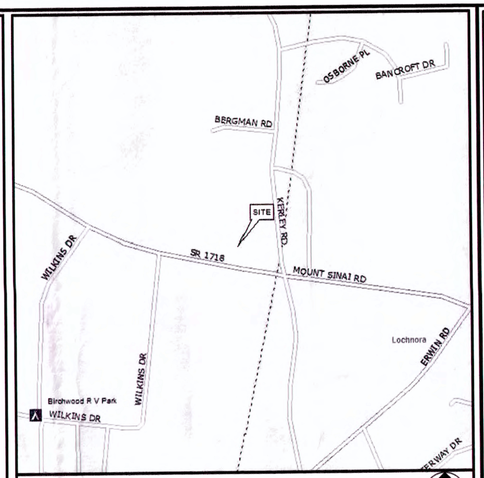


## LOCATION MAP

| | |
|---|---|
| LATITUDE | N 35° 59' 26.84" (NAD '83) |
| LONGITUDE | W 78° 59' 42.52" (NAD '83) |

GROUND ELEV. (AMSL) = 372.89' (NAVD '88)

## 1-A COORDINATES

ALL WORK AND MATERIALS SHALL BE PERFORMED AND INSTALLED IN ACCORDANCE WITH THE CURRENT EDITIONS OF THE FOLLOWING CODES AS ADOPTED BY THE LOCAL GOVERNING AUTHORITES. NOTHING IN THESE PLANS IS TO BE CONSTRUED TO PERMIT WORK NOT CONFORMING TO THE LATEST EDITIONS OF THE FOLLOWING:

1. NORTH CAROLINA BUILDING CODE
2. NORTH CAROLINA CODE COUNCIL
3. ANSI/TIA/EIA-222-F
4. NATIONAL ELECTRIC CODE (2008 EDITION)
5. LOCAL BUILDING CODE
6. CITY/COUNTY ORDINANCES

## CODE COMPLIANCE

| | | | |
|---|---|---|---|
| POWER COMPANY: | DUKE ENERGY | TELEPHONE COMPANY: | VERIZON |
| CONTACT: | CUSTOMER SERVICE | CONTACT: | CUSTOMER SERVICE |
| PHONE: | (800) 452-2777 | PHONE: | (800) 922-0204 |
| METER # NEAR SITE: | UNKNOWN | PHONE # NEAR SITE: | (919) 489-4884 |
| | | PEDESTAL # NEAR SITE: | DPCO POLE 70 |

## UTILITY INFORMATION

FROM RALEIGH, NC: TAKE I-40 W FOR 18.3 MILES. TAKE EXIT 270 FOR US-15/US-501 AND TURN RIGHT. TAKE THE FIRST LEFT ONTO MT MORIAH RD AND GO 1.4 MILES. TURN RIGHT ONTO ERWIN RD AND GO 1.5 MILES. TURN LEFT ONTO KERLEY RD AND GO 0.3 MILES. TURN LEFT ON MT SINAI RD AND THE SITE WILL BE LOCATED ON THE RIGHT.

## DRIVING DIRECTIONS

| | | | |
|---|---|---|---|
| SKYWAY SITE # : | NC-08828 | JURISDICTION: | ORANGE COUNTY |
| SKYWAY SITE NAME: | ERWIN ROAD | DISTURBED AREA: | 15,446± S.F. (0.35 AC.) |
| PROJECT DESCRIPTION: | PROPOSED WIRELESS TELECOMM FACILITY | PRESENT OCCUPANCY TYPE: | RESIDENCE/FARM |
| SITE ADDRESS: | 5022 KERLEY ROAD DURHAM, NC 27705 | CURRENT ZONING: | RB |
| | | PIN NUMBER: | 0801154533 |
| | | TOWER TYPE: | 125' MONOPOLE (129' OVERALL) |

## PROJECT INFORMATION

**LESSEE:**
NAME: T-MOBILE
ADDRESS: 185 FAIRCHILD STREET
CITY, STATE, ZIP: CHARLESTON, SC 29492
CONTACT: ROBERT HILL
PHONE: (843) 216-1210

**TOWER OWNER**
NAME: SKYWAY TOWERS, LLC
ADDRESS: 20525 AMBERFIELD DRIVE, SUITE 102
CITY, STATE, ZIP: LAND O' LAKES, FL 34639
CONTACT: JUSTIN JONES
PHONE: (813) 960-6217

**SURVEYOR:**
NAME: BATEMAN CIVIL SURVEY COMPANY, PC
ADDRESS: 200 NORTH MAIN ST
CITY, STATE, ZIP: HOLLY SPRINGS, NC 27540
CONTACT: STEVEN P. CARLSON, P.L.S.
PHONE: (919) 577-1080

**CIVIL ENGINEER:**
NAME: TOWER ENGINEERING PROFESSIONALS
ADDRESS: 326 TRYON ROAD
CITY, STATE, ZIP: RALEIGH, NC 27603
CONTACT: JUSTIN J. COSGROVE, P.E.
PHONE: (919) 661-6351

**ELECTRICAL ENGINEER:**
NAME: TOWER ENGINEERING PROFESSIONALS
ADDRESS: 326 TRYON ROAD
CITY, STATE, ZIP: RALEIGH, NC 27603
CONTACT: MARK S. QUAKENBUSH, P.E.
PHONE: (919) 661-6351

**PROPERTY OWNER:**
NAME: LEAH M. BERGMAN
ADDRESS: 5022 KERLEY ROAD
CITY, STATE, ZIP: DURHAM, NC 27705
CONTACT: LEAH M. BERGMAN
PHONE: (917) 714-9601

## CONTACT INFORMATION

| SHEET: | DESCRIPTION: | REV |
|---|---|---|
| T-1 | TITLE SHEET | 2 |
| C-1 | SITE PLAN & TOWER ELEVATION | 2 |
| C-2 | GRADING PLAN & CULVERT DETAILS | 2 |
| C-3 | LANDSCAPING PLAN & DETAILS | 2 |
| C-4 | CIVIL DETAILS I | 2 |
| C-5 | CIVIL DETAILS II | 2 |
| E-1 | ELECTRICAL NOTES & DETAILS | 2 |
| E-2 | GROUNDING NOTES & DETAILS I | 2 |
| E-3 | GROUNDING NOTES & DETAILS II | 2 |

## SHEET INDEX

1. ALL REFERENCES MADE TO OWNER IN THESE DOCUMENTS SHALL BE CONSIDERED SKYWAY TOWERS OR IT'S DESIGNATED REPRESENTATIVE.
2. ALL WORK PRESENTED ON THESE DRAWINGS MUST BE COMPLETED BY THE CONTRACTOR UNLESS NOTED OTHERWISE. THE CONTRACTOR MUST HAVE CONSIDERABLE EXPERIENCE IN PERFORMANCE OF WORK SIMILAR TO THAT DESCRIBED HEREIN. BY ACCEPTANCE OF THIS ASSIGNMENT, THE CONTRACTOR IS ATTESTING THAT HE DOES HAVE SUFFICIENT EXPERIENCE AND ABILITY, THAT HE IS KNOWLEDGEABLE OF THE WORK TO BE PERFORMED AND THAT HE IS PROPERLY LICENSED AND PROPERLY REGISTERED TO DO THIS WORK IN THE STATE OF NORTH CAROLINA.
3. THE STRUCTURE SHALL BE DESIGNED IN ACCORDANCE WITH ANSI/TIA-222-G-2-2009. THIS CONFORMS TO THE REQUIREMENTS OF THE NORTH CAROLINA BUILDING CODE, 2012 EDITION.
4. WORK SHALL BE COMPLETED IN ACCORDANCE WITH THE NORTH CAROLINA BUILDING CODE, 2012 EDITION.
5. UNLESS SHOWN OR NOTED OTHERWISE ON THE CONTRACT DRAWINGS, OR IN THE SPECIFICATIONS, THE FOLLOWING NOTES SHALL APPLY TO THE MATERIALS LISTED HEREIN, AND TO THE PROCEDURES TO BE USED ON THIS PROJECT.
6. ALL HARDWARE ASSEMBLY MANUFACTURER'S INSTRUCTIONS SHALL BE FOLLOWED EXACTLY AND SHALL SUPERSEDE ANY CONFLICTING NOTES ENCLOSED HEREIN.
7. IT IS THE CONTRACTOR'S SOLE RESPONSIBILITY TO DETERMINE ERECTION PROCEDURE AND SEQUENCE TO INSURE THE SAFETY OF THE STRUCTURE AND IT'S COMPONENT PARTS DURING ERECTION AND/OR FIELD MODIFICATIONS. THIS INCLUDES, BUT IS NOT LIMITED TO, THE ADDITION OF TEMPORARY BRACING, GUYS OR TIE DOWNS THAT MAY BE NECESSARY. SUCH MATERIAL SHALL BE REMOVED AND SHALL REMAIN THE PROPERTY OF THE CONTRACTOR AFTER THE COMPLETION OF THE PROJECT.
8. ALL DIMENSIONS, ELEVATIONS, AND EXISTING CONDITIONS SHOWN ON THE DRAWINGS SHALL BE FIELD VERIFIED BY THE CONTRACTOR PRIOR TO BEGINNING ANY MATERIALS ORDERING, FABRICATION OR CONSTRUCTION WORK ON THIS PROJECT. CONTRACTOR SHALL NOT SCALE CONTRACT DRAWINGS IN LIEU OF FIELD VERIFICATION. ANY DISCREPANCIES SHALL BE IMMEDIATELY BROUGHT TO THE ATTENTION OF THE OWNER AND THE OWNER'S ENGINEER. THE DISCREPANCIES MUST BE RESOLVED BEFORE THE CONTRACTOR IS TO PROCEED WITH THE WORK. THE CONTRACT DOCUMENTS DO NOT INDICATE THE METHOD OF CONSTRUCTION. THE CONTRACTOR SHALL SUPERVISE AND DIRECT THE WORK AND SHALL BE SOLELY RESPONSIBLE FOR ALL CONSTRUCTION MEANS, METHODS, TECHNIQUES, SEQUENCES, AND PROCEDURES. OBSERVATION VISITS TO THE SITE BY THE OWNER AND/OR THE ENGINEER SHALL NOT INCLUDE INSPECTION OF THE PROTECTIVE MEASURES OR THE PROCEDURES.
9. ALL MATERIALS AND EQUIPMENT FURNISHED SHALL BE NEW AND OF GOOD QUALITY, FREE FROM FAULTS AND DEFECTS AND IN CONFORMANCE WITH THE CONTRACT DOCUMENTS. ANY AND ALL SUBSTITUTIONS MUST BE PROPERLY APPROVED AND AUTHORIZED IN WRITING BY THE OWNER AND ENGINEER PRIOR TO INSTALLATION. THE CONTRACTOR SHALL FURNISH SATISFACTORY EVIDENCE AS TO THE KIND AND QUALITY OF THE MATERIALS AND EQUIPMENT BEING SUBSTITUTED.
10. THE CONTRACTOR SHALL BE RESPONSIBLE FOR INITIATING, MAINTAINING, AND SUPERVISING ALL SAFETY PRECAUTIONS AND PROGRAMS IN CONNECTION WITH THE WORK. THE CONTRACTOR IS RESPONSIBLE FOR INSURING THAT THIS PROJECT AND RELATED WORK COMPLIES WITH ALL APPLICABLE LOCAL, STATE, AND FEDERAL SAFETY CODES AND REGULATIONS GOVERNING THIS WORK.
11. ACCESS TO THE PROPOSED WORK SITE MAY BE RESTRICTED. THE CONTRACTOR SHALL COORDINATE INTENDED CONSTRUCTION ACTIVITY, INCLUDING WORK SCHEDULE AND MATERIALS ACCESS, WITH THE LESSEE PROJECT MANAGER.
12. BILL OF MATERIALS AND PART NUMBERS LISTED ON CONSTRUCTION DRAWINGS ARE INTENDED TO AID CONTRACTOR/OWNER. CONTRACTOR/OWNER SHALL VERIFY PARTS AND QUANTITIES WITH MANUFACTURER PRIOR TO BIDDING AND/OR ORDERING MATERIALS.
13. ALL PERMITS THAT MUST BE OBTAINED ARE THE RESPONSIBILITY OF THE CONTRACTOR. THE CONTRACTOR WILL BE RESPONSIBLE FOR ABIDING BY ALL CONDITIONS AND REQUIREMENTS OF THE PERMITS.
14. 24 HOURS PRIOR TO THE BEGINNING OF ANY CONSTRUCTION, THE CONTRACTOR MUST NOTIFY THE APPLICABLE JURISDICTIONAL (STATE, COUNTY OR CITY) ENGINEER.
15. THE CONTRACTOR SHALL REWORK (DRY, SCARIFY, ETC.) ALL MATERIAL NOT SUITABLE FOR SUBGRADE IN ITS PRESENT STATE. AFTER REWORKING, IF THE MATERIAL REMAINS UNSUITABLE, THE CONTRACTOR SHALL UNDERCUT THIS MATERIAL AND REPLACE WITH APPROVED MATERIAL. ALL SUBGRADES SHALL BE PROOFROLLED WITH A FULLY LOADED TANDEM AXLE DUMP TRUCK PRIOR TO PAVING. ANY SOFT MATERIAL SHALL BE REWORKED OR REPLACED.
16. THE CONTRACTOR IS REQUIRED TO MAINTAIN ALL PIPES, DITCHES, AND OTHER DRAINAGE STRUCTURES FREE FROM OBSTRUCTION UNTIL WORK IS ACCEPTED BY THE OWNER. THE CONTRACTOR IS RESPONSIBLE FOR ANY DAMAGES CAUSED BY FAILURE TO MAINTAIN DRAINAGE STRUCTURE IN OPERABLE CONDITION.
17. THE OWNER SHALL HAVE A SET OF APPROVED PLANS AVAILABLE AT THE SITE AT ALL TIMES WHILE WORK IS BEING PERFORMED. A DESIGNATED RESPONSIBLE EMPLOYEE SHALL BE AVAILABLE FOR CONTACT BY GOVERNING AGENCY INSPECTORS.
18. ANY BUILDINGS ON THIS SITE ARE INTENDED TO SHELTER EQUIPMENT WHICH WILL ONLY BE PERIODICALLY MAINTAINED AND ARE NOT INTENDED FOR HUMAN OCCUPANCY.
19. TEMPORARY FACILITIES FOR PROTECTION OF TOOLS AND EQUIPMENT SHALL CONFORM TO LOCAL REGULATIONS AND SHALL BE THE CONTRACTOR'S RESPONSIBILITY.
20. THE CONTRACTOR AND ITS SUBCONTRACTORS SHALL CARRY LIABILITY INSURANCE IN THE AMOUNTS AND FORM IN ACCORDANCE WITH LESSEE SPECIFICATIONS. CERTIFICATES DEMONSTRATING PROOF OF COVERAGE SHALL BE PROVIDED TO LESSEE PRIOR TO THE START OF THE WORK ON THE PROJECT.
21. THE CONTRACTOR SHALL CONTACT ALL APPLICABLE UTILITY SERVICES TO VERIFY LOCATIONS OF EXISTING UTILITIES AND REQUIREMENTS FOR NEW UTILITY CONNECTIONS PRIOR TO EXCAVATING.
22. THE CONTRACTOR SHALL MAINTAIN THE JOB CLEAR OF TRASH AND DEBRIS. ALL WASTE MATERIALS SHALL BE REMOVED FROM THE SITE PRIOR TO SUBSTANTIAL COMPLETION AND PRIOR TO FINAL ACCEPTANCE. THE CONTRACTOR SHALL FURNISH ONE 55 GALLON BARREL, AND TRASH BAGS, AND SHALL REMOVE TRASH, DEBRIS, ETC., ON A DAILY BASIS.
23. THE CONTRACTOR SHALL VISIT THE SITE AND BECOME FAMILIAR WITH ALL CONDITIONS PRIOR TO SUBMITTING HIS PROPOSAL. CONTRACTOR SHALL VERIFY ALL DIMENSIONS AND CONDITIONS SHOWN ON THESE DRAWINGS WITH THOSE AT THE SITE. ANY VARIATION WHICH REQUIRES PHYSICAL CHANGE SHALL BE BROUGHT TO THE ATTENTION OF THE SKYWAY TOWERS PROJECT ENGINEER FOR FACILITIES/CONSTRUCTION.
24. THE CONTRACTOR SHALL GUARANTEE THE WORK PERFORMED ON THE PROJECT BY THE CONTRACTOR AND ANY OR ALL OF THE SUBCONTRACTORS WHO PERFORMED WORK FOR THE CONTRACTOR ON THIS PROJECT. THE GUARANTEE SHALL BE FOR A FULL YEAR FOLLOWING ISSUANCE OF THE FINAL PAYMENT OF RETAINAGE. ALL MATERIALS AND WORKMANSHIP SHALL BE WARRANTED FOR ONE YEAR FROM ACCEPTANCE DATE.

## GENERAL NOTES

PLANS PREPARED FOR:
T-Mobile
185 FAIRCHILD STREET
CHARLESTON, SC 29492
OFFICE: (843) 216-1210

PLANS PREPARED BY:
TOWER ENGINEERING PROFESSIONALS
326 TRYON ROAD
RALEIGH, NC 27603-5263
OFFICE: (919) 661-6351
FAX: (919) 661-6350
N.C. LICENSE # C-1794

| REV | DATE | ISSUED FOR: |
|---|---|---|
| 2 | 02-11-15 | CONSTRUCTION |
| 1 | 01-30-15 | PRELIMINARY |
| 0 | 01-29-15 | PRELIMINARY |

DRAWN BY: BAM CHECKED BY: JJC

PROJECT INFORMATION:
**ERWIN ROAD**
**TMO ID: 5RA0532D**
**SKYWAY SITE #: NC-08828**
5022 KERLEY ROAD
DURHAM, NC 27705
(ORANGE COUNTY)

SEAL:
NORTH CAROLINA PROFESSIONAL ENGINEER SEAL 037851 JUSTIN J. COSGROVE
February 11, 2015

SHEET TITLE: **TITLE SHEET**
SHEET NUMBER: **T-1**
REVISION: 2
TEP #: 50061

## NOTES:

1. THE BASIS OF THE MERIDIANS AND COORDINATES FOR THIS PLAT IS THE NORTH CAROLINA STATE PLANE COORDINATE SYSTEM, NORTH AMERICAN DATUM 1983 (NCSPCS NAD 83), BASED ON DIFFERENTIAL GPS OBSERVATIONS PERFORMED ON DECEMBER 11, 2014.
2. VERTICAL INFORMATION SHOWN, BASED ON THE NORTH AMERICAN VERTICAL DATUM OF NAVD 1988 IN FEET.
3. ALL DISTANCES ARE GROUND UNLESS OTHERWISE NOTED.
4. THE TOWER IS LOCATED IN ZONE "X," AREAS DETERMINED TO BE OUTSIDE THE 0.2% ANNUAL CHANCE FLOODPLAIN ACCORDING TO FEMA COMMUNITY PANEL #3720080100K DATED FEBRUARY 2, 2007.

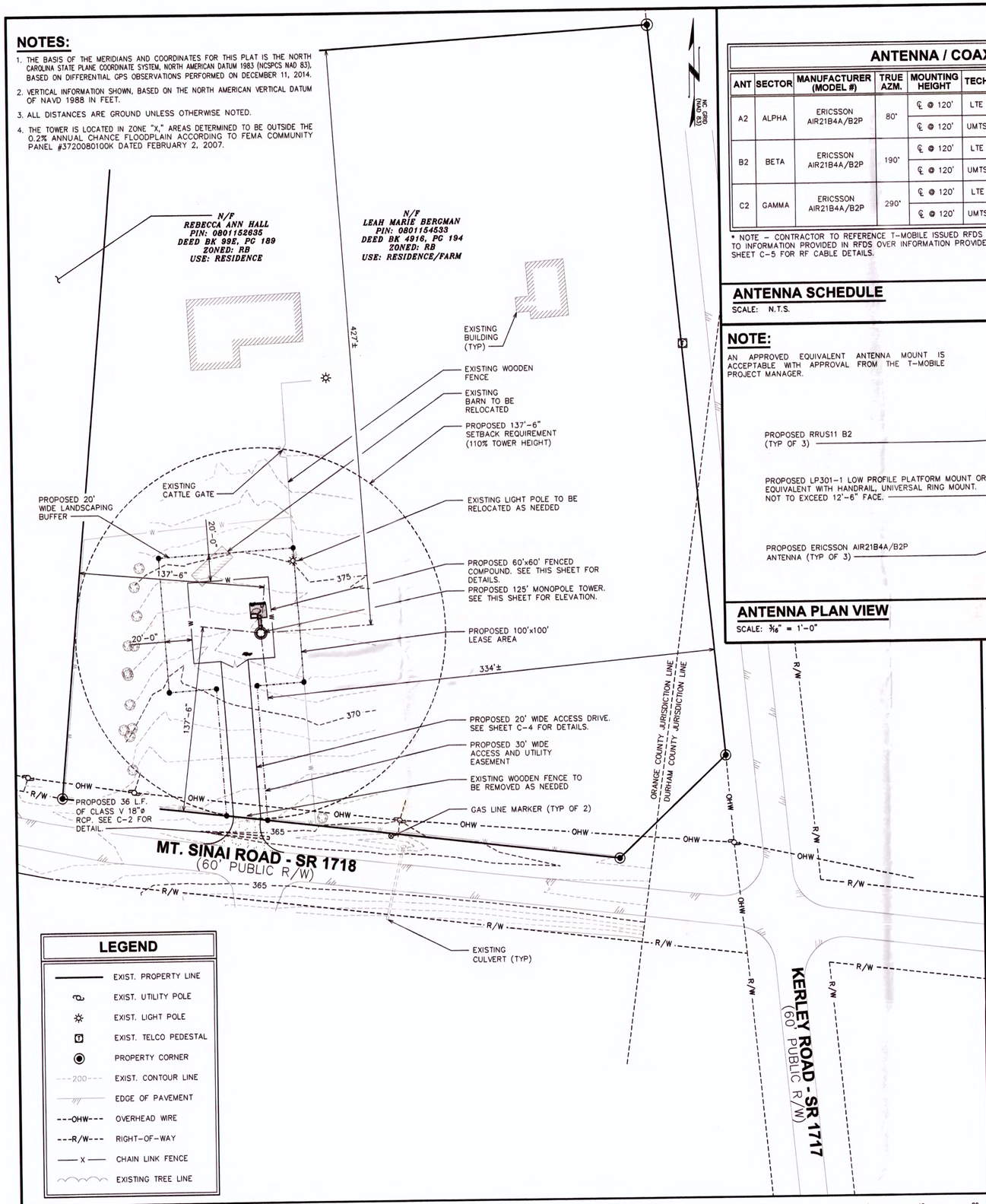


## SITE PLAN
SCALE: 1" = 40'

## ANTENNA / COAX SCHEDULE

| ANT | SECTOR | MANUFACTURER (MODEL #) | TRUE AZM. | MOUNTING HEIGHT | TECH | COAX SIZE | COAX LENGTH | MECH D-TILT | ELEC D-TILT | RRU |
|---|---|---|---|---|---|---|---|---|---|---|
| A2 | ALPHA | ERICSSON AIR21B4A/B2P | 80° | ℄ @ 120' | LTE | (2) FIBER | 150'± | 0° | 2° | (1) RRUS11 B2 |
| | | | | ℄ @ 120' | UMTS | (2) FIBER | 150'± | 0° | 2° | |
| B2 | BETA | ERICSSON AIR21B4A/B2P | 190° | ℄ @ 120' | LTE | (2) FIBER | 150'± | 0° | 2° | (1) RRUS11 B2 |
| | | | | ℄ @ 120' | UMTS | (2) FIBER | 150'± | 0° | 2° | |
| C2 | GAMMA | ERICSSON AIR21B4A/B2P | 290° | ℄ @ 120' | LTE | (2) FIBER | 150'± | 0° | 2° | (1) RRUS11 B2 |
| | | | | ℄ @ 120' | UMTS | (2) FIBER | 150'± | 0° | 2° | |

* NOTE – CONTRACTOR TO REFERENCE T-MOBILE ISSUED RFDS AND GIVE PRECEDENCE TO INFORMATION PROVIDED IN RFDS OVER INFORMATION PROVIDED IN THIS TABLE. SEE SHEET C-5 FOR RF CABLE DETAILS.

## ANTENNA SCHEDULE
SCALE: N.T.S.

## NOTE:
AN APPROVED EQUIVALENT ANTENNA MOUNT IS ACCEPTABLE WITH APPROVAL FROM THE T-MOBILE PROJECT MANAGER.

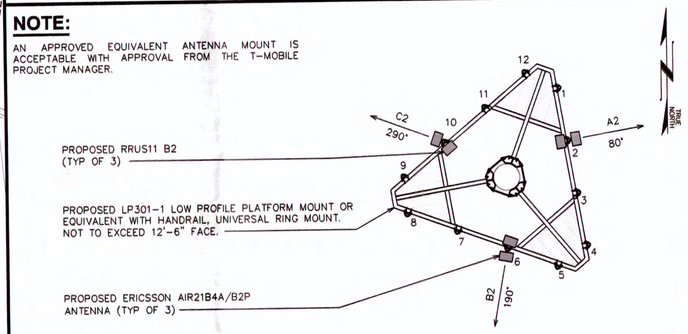


## ANTENNA PLAN VIEW
SCALE: 3/16" = 1'-0"

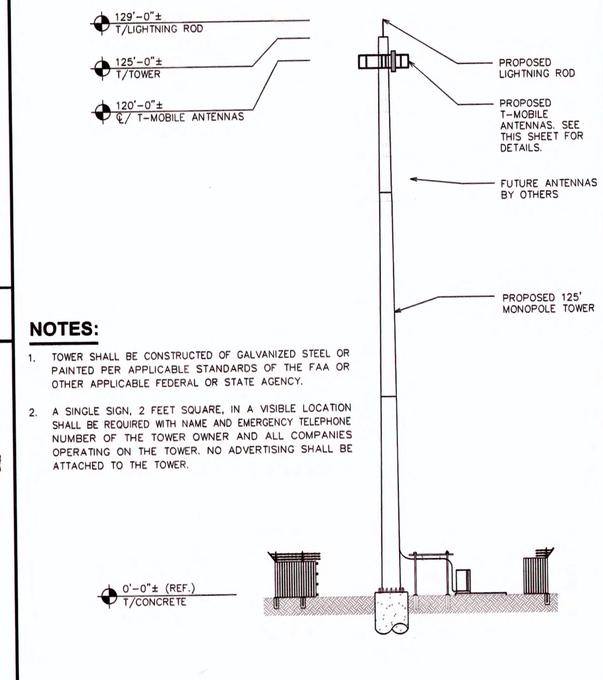


## NOTES:

1. TOWER SHALL BE CONSTRUCTED OF GALVANIZED STEEL OR PAINTED PER APPLICABLE STANDARDS OF THE FAA OR OTHER APPLICABLE FEDERAL OR STATE AGENCY.
2. A SINGLE SIGN, 2 FEET SQUARE, IN A VISIBLE LOCATION SHALL BE REQUIRED WITH NAME AND EMERGENCY TELEPHONE NUMBER OF THE TOWER OWNER AND ALL COMPANIES OPERATING ON THE TOWER. NO ADVERTISING SHALL BE ATTACHED TO THE TOWER.

## TOWER ELEVATION
SCALE: 1/16" = 1'-0"

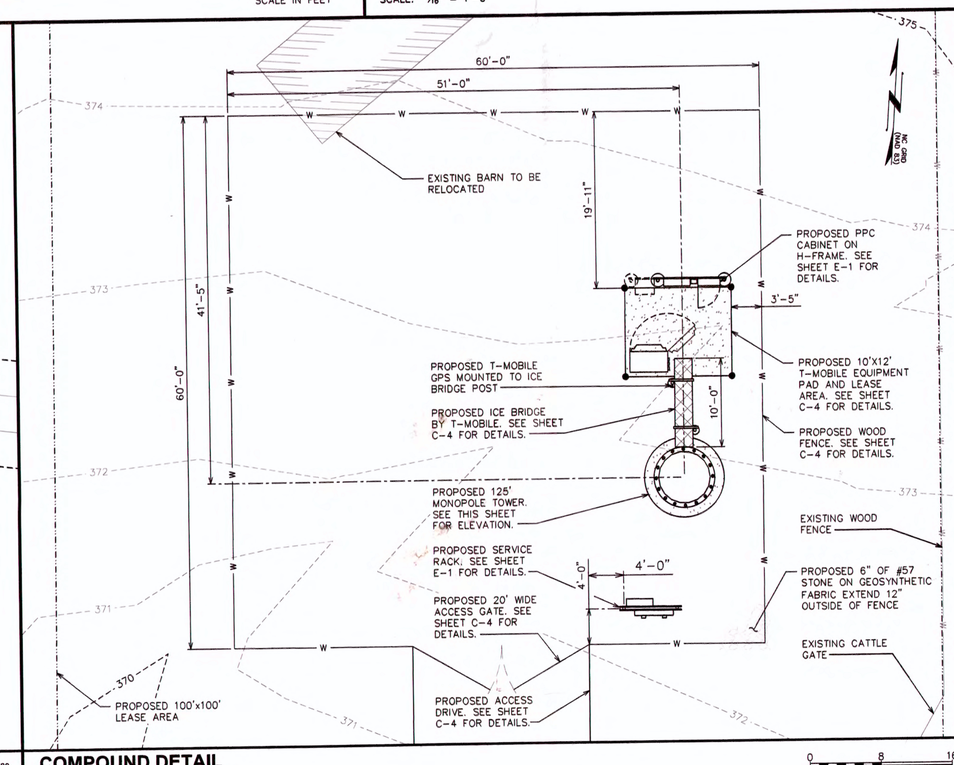


## COMPOUND DETAIL
SCALE: 1/8" = 1'-0"

PLANS PREPARED FOR:

T-Mobile
185 FAIRCHILD STREET
CHARLESTON, SC 29492
OFFICE: (843) 216-1210

PLANS PREPARED BY:

TOWER ENGINEERING PROFESSIONALS
326 TRYON ROAD
RALEIGH, NC 27603-5263
OFFICE: (919) 661-6351
FAX: (919) 661-6350
N.C. LICENSE # C-1794

| REV | DATE | |
|---|---|---|
| 2 | 02-11-15 | CONSTRUCTION |
| 1 | 01-30-15 | PRELIMINARY |
| 0 | 01-29-15 | PRELIMINARY |

ISSUED FOR:
DRAWN BY: BAM
CHECKED BY: JJC

PROJECT INFORMATION:
ERWIN ROAD
TMO ID: 5RA0532D
SKYWAY SITE #: NC-08828
5022 KERLEY ROAD
DURHAM, NC 27705
(ORANGE COUNTY)

SEAL:
NORTH CAROLINA PROFESSIONAL SEAL 037854 ENGINEER JUSTIN J. COSGROVE
February 11, 2015

SHEET TITLE:
SITE PLAN & TOWER ELEVATION

REVISION: 2
TEP #: 50061

SHEET NUMBER:
C-1

## NOTES:

1. L = THE LENGTH OF THE RIPRAP APRON.
2. d = 1.5 TIMES THE MAXIMUM STONE DIAMETER BUT NOT LESS THAN 6" (INCHES).
3. A FILTER BLANKET OR FILTER FABRIC SHOULD BE INSTALLED BETWEEN THE RIPRAP AND SOIL FOUNDATION.

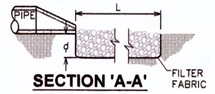


SECTION 'A-A'

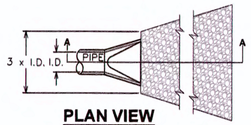


PLAN VIEW

## PIPE PROTECTION DETAILS

SCALE: N.T.S.

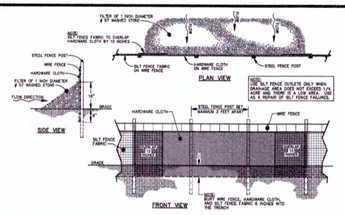


## STANDARD SILT FENCE OUTLET DETAIL

SCALE: N.T.S.

## NOTES:

1. REMOVE SEDIMENT ACCUMULATION FROM BEHIND CHECK DAMS TO PREVENT DAMAGE TO CHANNEL VEGETATION. FLOW SHOULD BE MAINTAINED THROUGH THE DAM.
2. KEY RIP RAP INTO THE DAM FOR STABILIZATION.

SIDE VIEW

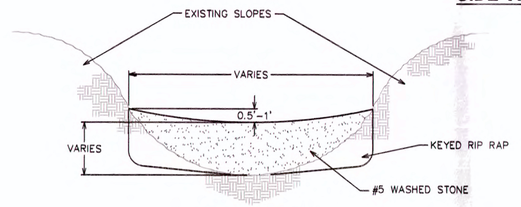


FRONT VIEW

## CHECK DAM DETAIL

SCALE: ½" = 1'-0"

0 2 4
SCALE IN FEET

## NOTES:

1. FILTER FABRIC SHALL CONFORM TO THE REQUIREMENTS LISTED IN ASTM D 6461.
2. ENDS OF INDIVIDUAL FILTER FABRIC SHALL BE SECURELY FASTENED AT A SUPPORT POST WITH 4 FEET MINIMUM OVERLAP TO THE NEXT POST
3. PLACE 12 INCHES OF FABRIC ALONG THE BOTTOM AND SIDE OF THE TRENCH.
4. INSPECT SEDIMENT FENCE(S) AT LEAST ONCE A WEEK AND AFTER EACH RAINFALL.
5. REMOVE SEDIMENT DEPOSITS AS NECESSARY TO PROVIDE ADEQUATE STORAGE VOLUME FOR THE NEXT RAIN AND TO REDUCE PRESSURE ON THE FENCE.
6. AFTER CONSTRUCTION IS COMPLETE, THE CONTRACTOR SHALL REMOVE ALL FENCING MATERIALS AND UNSTABLE SEDIMENT DEPOSITS, BRING THE AREA TO GRADE AND PROPERLY STABILIZE THE SITE.

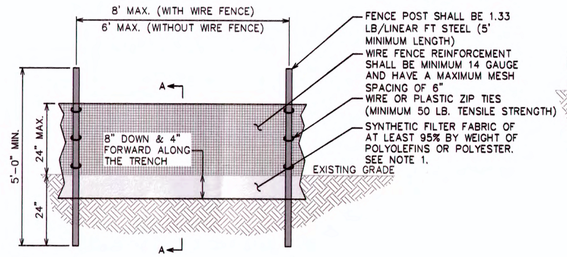


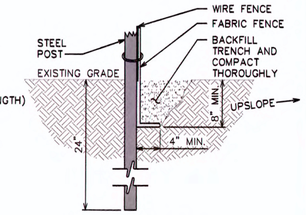


SECTION A-A

## SILT FENCE DETAIL

SCALE: N.T.S.

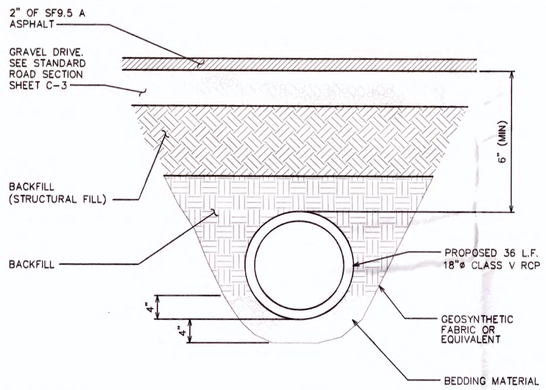


## CULVERT DETAIL

SCALE: N.T.S

## NOTES:

1. TURNING RADIUS THAT IS SUFFICIENT TO ACCOMODATE LARGE TRUCKS SHALL BE PROVIDED.
2. THE ENTRANCE(S) SHOULD BE LOCATED TO PROVIDE FOR UTILIZATION BY ALL CONSTRUCTION VEHICLES.
3. ENTRANCE(S) MUST BE MAINTAINED IN A CONDITION WHICH WILL PREVENT TRACKING OR DIRECT FLOW OF MUD ONTO STREETS. PERIODIC TOP DRESSING WITH STONE WILL BE NECESSARY.
4. ANY MATERIAL TRACKED ONTO THE ROADWAY MUST BE CLEANED UP IMMEDIATELY.
5. GRAVEL CONSTRUCTION ENTRANCE SHALL BE LOCATED AT ALL POINTS OF INGRESS AND EGRESS UNTIL SITE IS STABILIZED. FREQUENT CHECKS OF THE DEVICE AND TIMELY MAINTENANCE MUST BE PROVIDED.
6. ACCESS ROADS ARE DESIGNED AND SHALL BE MAINTAINED TO SUPPORT THE LOADS OF FIRE APPARATUS AND SHALL BE SURFACED AS TO PROVIDE ALL-WEATHER DRIVING CAPABILITIES.
7. DRIVEWAY DETAILS SHOWN PER ORANGE COUNTY CONTACT: DEANGELO JONES (336) 570-6833.

### MOUNT SINAI ROAD - SR 1718

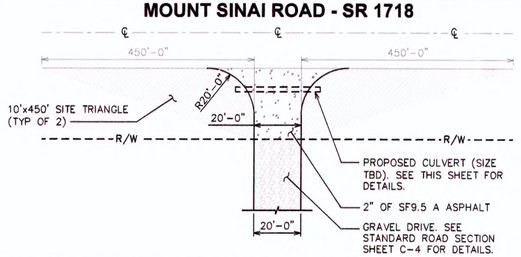


## STABILIZED CONSTRUCTION ENTRANCE

SCALE: N.T.S.

NORTH AMERICAN GREEN

EROSION CONTROL *Products Guaranteed* SOLUTIONS

14649 HIGHWAY 41 NORTH
EVANSVILLE, IN 47725
800-772-2040
www.nagreen.com

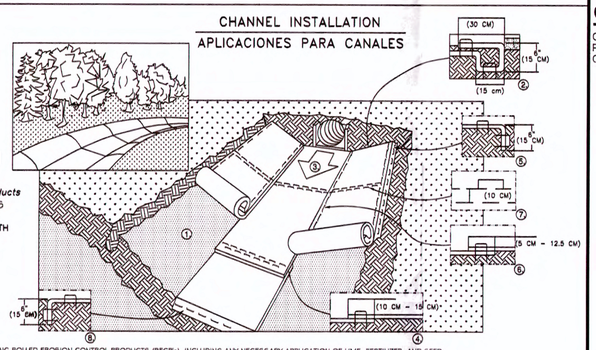


1. PREPARE SOIL BEFORE INSTALLING ROLLED EROSION CONTROL PRODUCTS (RECPs), INCLUDING ANY NECESSARY APPLICATION OF LIME, FERTILIZER, AND SEED. NOTE: WHEN USING CELL-O-SEED DO NOT SEED PREPARED AREA. CELL-O-SEED MUST BE INSTALLED WITH PAPER SIDE DOWN.
2. BEGIN AT THE TOP OF THE CHANNEL BY ANCHORING THE RECP's IN A 6" (15 CM) DEEP X 6" (15 CM) WIDE TRENCH WITH APPROXIMATELY 12" (30 CM) OF RECP's EXTENDED BEYOND THE UP-SLOPE PORTION OF THE TRENCH. ANCHOR THE RECP's WITH A ROW OF STAPLES/STAKES APPROXIMATELY 12" (30 CM) APART IN THE BOTTOM OF THE TRENCH. BACKFILL AND COMPACT THE TRENCH AFTER STAPLING. APPLY SEED TO COMPACTED SOIL AND FOLD REMAINING 12" (30 CM) PORTION OF RECP's BACK OVER SEED AND COMPACTED SOIL. SECURE RECP's OVER COMPACTED SOIL WITH A ROW OF STAPLES/STAKES SPACED APPROXIMATELY 12" (30 CM) ACROSS THE WIDTH OF THE RECP's.
3. ROLL CENTER RECP's IN DIRECTION OF WATER FLOW IN BOTTOM OF CHANNEL. RECP's WILL UNROLL WITH APPROPRIATE SIDE AGAINST THE SOIL SURFACE. ALL RECP's MUST BE SECURELY FASTENED TO SOIL SURFACE BY PLACING STAPLES/STAKES IN APPROPRIATE LOCATIONS AS SHOWN IN THE STAPLE PATTERN GUIDE. WHEN USING THE DOT SYSTEM , STAPLES/STAKES SHOULD BE PLACED THROUGH EACH OF THE COLORED DOTS CORRESPONDING TO THE APPROPRIATE STAPLE PATTERN.
4. PLACE CONSECUTIVE RECP's END OVER END (SHINGLE STYLE) WITH A 4" - 6" (10 CM - 15 CM) OVERLAP. USE A DOUBLE ROW OF STAPLES STAGGERED 4" (10 CM) APART AND 4" (10 CM) ON CENTER TO SECURE RECP's.
5. FULL LENGTH EDGE OF RECP's AT TOP OF SIDE SLOPES MUST BE ANCHORED WITH A ROW OF STAPLES/STAKES APPROXIMATELY 12" (30 CM) APART IN A 6" (15 CM) DEEP X 6" (15 CM) WIDE TRENCH. BACKFILL AND COMPACT THE TRENCH AFTER STAPLING.
6. ADJACENT RECP's MUST BE OVERLAPPED APPROXIMATELY 2" - 5" (5 CM - 12.5 CM) (DEPENDING ON RECP's TYPE) AND STAPLED.
7. IN HIGH FLOW CHANNEL APPLICATIONS, A STAPLE CHECK SLOT IS RECOMMENDED AT 30 TO 40 FOOT (9 M - 12 M) INTERVALS. USE A DOUBLE ROW OF STAPLES STAGGERED 4" (10 CM) APART AND 4" (10 CM) ON CENTER OVER ENTIRE WIDTH OF THE CHANNEL.
8. THE TERMINAL END OF THE RECP's MUST BE ANCHORED WITH A ROW OF STAPLES/STAKES APPROXIMATELY 12" (30 CM) APART IN A 6" (15 CM) DEEP X 6" (15 CM) WIDE TRENCH. BACKFILL AND COMPACT THE TRENCH AFTER STAPLING.

NOTE:
* IN LOOSE SOIL CONDITIONS, THE USE OF STAPLE OR STAKE LENGTHS GREATER THAN 6" (15 CM) MAY BE NECESSARY TO PROPERLY ANCHOR THE RECP's.

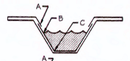


CRITICAL POINTS
A. OVERLAPS AND SEAMS
B. PROJECTED WATER LINE
C. CHANNEL BOTTOM/SIDE SLOPE VERTICES

NOTE:
* HORIZONTAL STAPLE SPACING SHOULD BE ALTERED IF NECESSARY TO ALLOW STAPLES TO SECURE THE CRITICAL POINTS ALONG THE CHANNEL SURFACE.

** IN LOOSE SOIL CONDITIONS, THE USE OF STAPLE OR STAKE LENGTHS GREATER THAN 6" (15 cm) MAY BE NECESSARY TO PROPERLY ANCHOR THE RECP's.

PUNTOS CRITICOS
A. TRASLAPES Y JUNTAS
B. LINEAS DE AGUA PROYECTADA
C. FONDO DEL CANAL/VERTICES DE LAS PENDIENTES LATERALES

NOTA:
* LA SEPARACION HORIZONTAL DE LAS GRAPAS SE DEBE ALTERAR SI SE NECESITA, PARA PERMITIR QUE LAS GRAPAS ASEGUREN LOS PUNTOS CRITICOS A LO LARGO DE LA SUPERFICIE DEL CANAL.

** EN CONDICIONES DE SUELO SUELTO, PUEDE QUE SE NECESITEN GRAPAS O ESTACAS DE MAS DE 6" (15 CM) DE LARGO PARA ASEGURAR LAS MANTAS CORRECTAMENTE.

1. PREPARE EL SUELO DE COLOCAR LAS MANTAS, INCLUYENDO LA APLICASION DE CAL, FERTILIZANTE SEMILLA. NOTA: CUANDO ESTE USANDO CELL-O-SEED NO SIEMBRE EL AREA PREPARADA. CELL-O-SEED TIENE QUE INSTALARSE CON EL LADO DE PAPEL HACIA ABAJO.
2. COMIENCE EN LA CABECERA DEL CANAL SUJETANDO LA MANTA EN UNA ZANJA DE 6" (15 CM) DE PROFUNDIDAD POR 6" (15 CM). DE ANCHO CON APROXIMADAMENTE 12" (30 CM) DE LA MANTA EXTENDIDA MAS ALLA DE LA PENDIENTE ALTA DE LA ZANJA. SUJETE RELLENE Y COMPACTE LA ZANJA DESPUES DEL ENGRAPE. RIEGUE LA SEMILLA EN EL SUELO COMPACTADO Y DOBLE LAS 12" (30 CM) REMANENTES DE MANTA SOBRE LA SEMILLA Y EL SUELO COMPACTADO. ASEGURE LA MANTA SOBRE EL SUELO CON UNA LINEADE GRAPAS O ESTACAS APROXIMADAMENTE 12" (30 CM) UNA DE LA OTRA A TRAVES DEL ANCHO DE LA MANTA.
3. DESENROLLE LA MANTA DEL MEDIO EN EL FONDO DEL CANAL Y EN LA DIRECCION DEL FLUJO DE AGUA CON EL LADO APROPIADO HACIA LA SUPERFICIE DEL SUELO. TODAS LAS MANTAS DEBERAN ASEGURARSE A LA SUPERFICIE DEL SUELO POR MEDIO DE GRAPAS O ESTACAS EN LUGARESAPROPIADOS TAL Y COMO SE INDICA EN EL PATRON GUIA DE ENGRAPADO. CUANDO ESTE USANDO EL DOT SYSTEM , LAS GRAPAS O ESTACAS DEBEN COLOCARSE A TRAVES DE CADA UNO DE LOS PUNTOS CON COLOR CORRESPONDIENTES AL PATRON DE ENGRAPADO APROPIADO.
4. COLOQUE LAS MANTAS CONSECUTIVAS BORDE SOBRE BORDE (TIPO ESCALONADO) CON UN TRASLAPE DE 4" - 6" (10 CM - 15 CM). USE UNA LINEA DOBLE DE GRAPAS ESCALONADAS, SEPARADAS POR 4" (10 CM) Y CADA 4" (10 CM) SOBRE EL CENTRO PARA ASEGURAR LAS MANTAS.
5. EN EL TOPE DE LAS DOS PENDIENTES LATERALES DEL CANAL, SE DEBE SUJETAR TODO EL LARGO DE LA ORILLA DE LAS MANTAS CON UNA LINEA DE GRAPAS O ESTACAS APROXIMADAMENTE CADA 12" (30 CM) UNA DE LA OTRA EN UNA ZANJA DE 6" (15 CM) DE PROFUNDIDAD POR 6" (15 CM) DE ANCHO. RELLENE Y COMPACTE LA ZANJA DESPUES DEL ENGRAPE.
6. LAS MANTAS ADYACENTES DEBEN TRASLAPARSE APROXIMADAMENTE DE 2" - 5" (5 CM- 12.5 CM) (DEPENDIENDO DEL TIPO DE MANTA) Y ENGRAPARSE.
7. EN APLICACIONES PARA CANALES DE FLUJO ALTO, SE RECOMIENDA DEJAR UNA RANURA PARA EL CHEQUEO DE LAS GRAPAS A INTERVALOS DE 30 A 40 PIES (9 M - 12 M). USE UNA LINEA DOBLE DE FRAPAS ESCALONADAS, SEPARADAS POR 4" (10 CM) Y CADA 4" (10 CM) SOBRE EL CENTRO A TRAVES DE TODO EL ANCHO DEL CANAL.
8. LOS BORDES FINALES DE LAS MANTAS DEBEN SUJETARSE CON UNA LINEA DE GRAPAS O ESTACAS APROXIMADAMENTE CADA 12" 30 CM) UNA DE LA OTRA EN UNA ZANJA DE 6" (15 CM) DE PROFUNDIDAD POR 6" (15 CM) DE ANCHO. RELLENE Y COMPACTE DESPUES DEL ENGRAPADO.

NOTA:
* EN CONDICIONES DE SUELTO, PUEDE QUE SE NECESITEN GRAPAS O ESTACAS DE MAS DE 6" (15 CM) DE LARGO PARA ASEGURAR LAS MANTAS CORRECTAMENTE.

REV. 01/05

## EROSION CONTROL MATTING INSTALLATION

SCALE: N.T.S.

## GRADING NOTE:

CONTRACTOR SHALL ENSURE POSITIVE DRAINAGE ACROSS COMPOUND

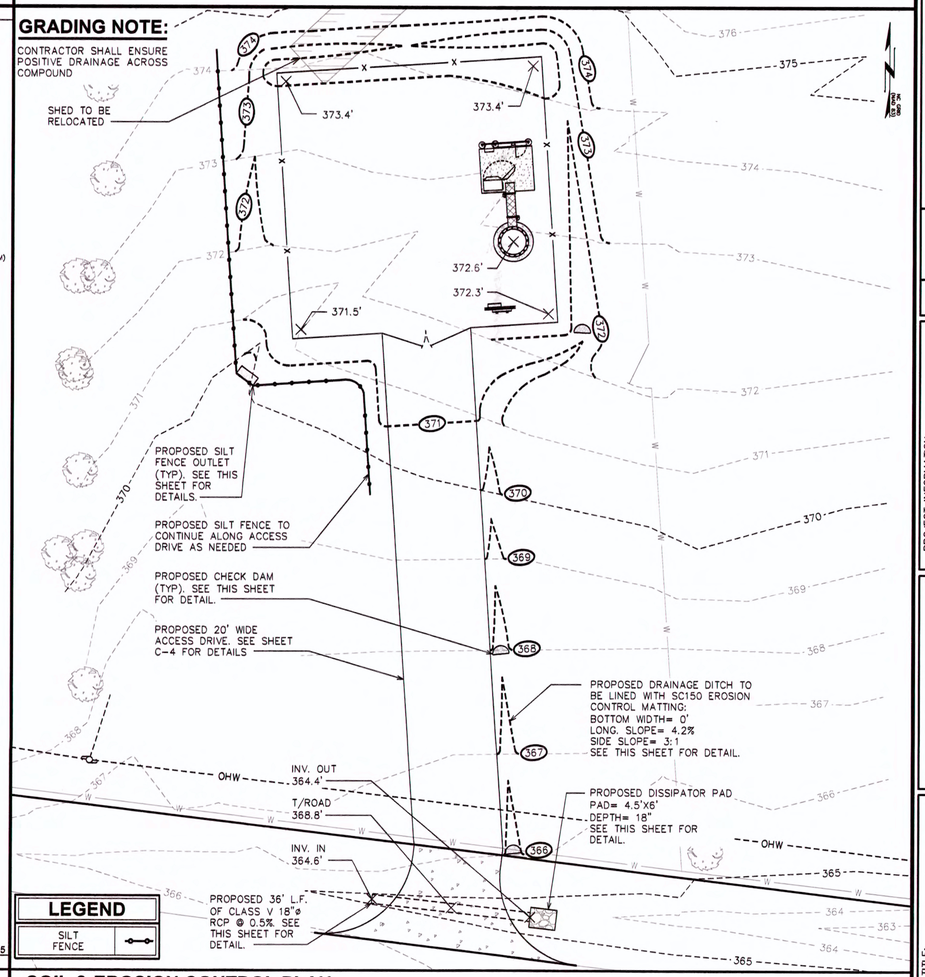


## SOIL & EROSION CONTROL PLAN

SCALE: 1/16" = 1'-0"

0 16 32
SCALE IN FEET

PLANS PREPARED FOR:

T-Mobile

185 FAIRCHILD STREET
CHARLESTON, SC 29492
OFFICE: (843) 216-1210

PLANS PREPARED BY:

TOWER ENGINEERING PROFESSIONALS
326 TRYON ROAD
RALEIGH, NC 27603-5263
OFFICE: (919) 661-6351
FAX: (919) 661-6350
N.C. LICENSE # C-1794

| REV | DATE | ISSUED FOR: |
|---|---|---|
| 2 | 02-11-15 | CONSTRUCTION |
| 1 | 01-30-15 | PRELIMINARY |
| 0 | 01-29-15 | PRELIMINARY |

DRAWN BY: DAM CHECKED BY: JJC

PROJECT INFORMATION:

ERWIN ROAD
TMO ID: 5RA0532D
SKYWAY SITE #: NC-08828

5922 KERLEE ROAD
DURHAM, NC 27703
(ORANGE COUNTY)

SEAL:

NORTH CAROLINA PROFESSIONAL SEAL 037371 ENGINEER MATTHEW W. COLLINS

February 11, 2015

SHEET TITLE:

GRADING PLAN & CULVERT DETAILS

SHEET NUMBER: C-2

REVISION: 2

TEP #: 50061

## LANDSCAPE NOTES:

1. TOPSOIL TO BE PROVIDED BY SITE CONTRACTOR IN ROUGH GRADE TO WITHIN 1" OF FINISH GRADE.
2. EACH PLANT TO BE FREE FROM DISEASE, INSECT INFESTATION, AND MECHANICAL INJURIES, AND IN ALL RESPECTS BE SUITABLE FOR FIELD PLANTING.
3. ALL PLANTS TO BE FULLY GUARANTEED (LABOR AND MATERIALS) FOR A PERIOD OF NOT LESS THAN ONE (1) YEAR FROM DATE OF INSTALLATION.
4. ALL PLANTS SHALL CONFORM TO THE AMERICAN STANDARD FOR NURSERY STOCK, ANSI Z60.1-1973 IN REGARD TO SIZING, GROWING, AND B&B SPECIFICATIONS.
5. THE CONTRACTOR SHALL PROTECT ALL EXISTING TREES AND SHRUBS WITHIN THE CONSTRUCTION AREA IDENTIFIED AS "TO REMAIN" FROM DAMAGE BY EQUIPMENT AND CONSTRUCTION ACTIVITIES.

## PLANTING SCHEDULE

| ITEM | QTY. | BOTANICAL NAME | COMMON NAME | HEIGHT @ PLANTING | HEIGHT @ 3 YRS. | SPREAD/ CALIPER | SPACING MIN/MAX | REMARKS |
|---|---|---|---|---|---|---|---|---|
| **EVERGREEN TREE** | | | | | | | | |
| 1 | 8 | *(Pinus Palustris)* | LONGLEAF PINE | 8'-0" (MIN) | – | N/A | 40/100 | SHOWN AS |
| **EVERGREEN UNDERSTORY** | | | | | | | | |
| 2 | 15 | *(Cupressus Leylandii)* | LEYLAND CYPRESS | 6'-0" (MIN) | – | N/A | 10/30 | SHOWN AS |
| **SHRUBS** | | | | | | | | |
| 3 | 67 | *(Morella Cerifera)* | WAX MYRTLE | 18" (MIN) | – | N/A | EVENLY | SHOWN AS |
| **MULCH** | | | | | | | | |
| 4 | – | - | MULCH | – | – | – | – | APPLY 3"-4" DEEP WITHIN BUFFERYARD FOR GROUND COVER |

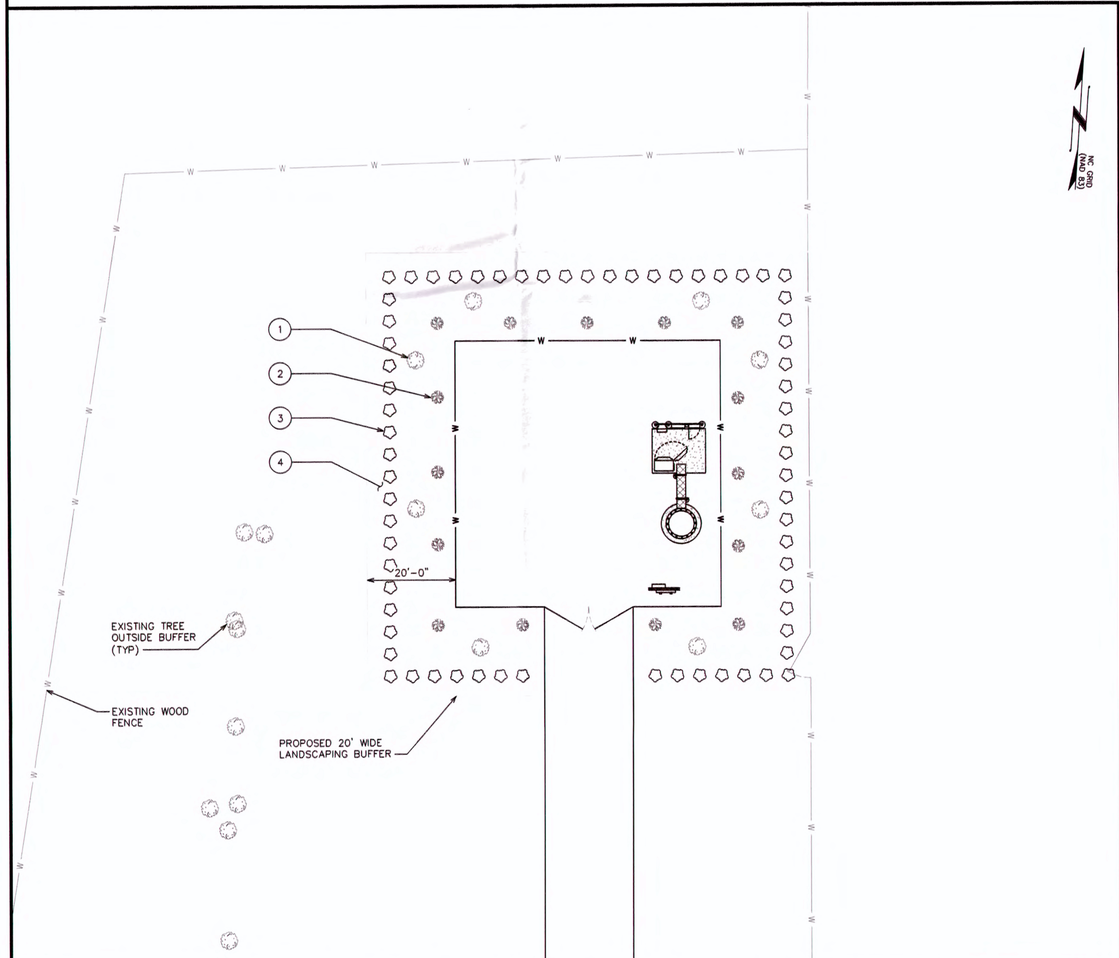


**LANDSCAPING PLAN**

SCALE: 1/16" = 1'-0"

0 16 32
SCALE IN FEET

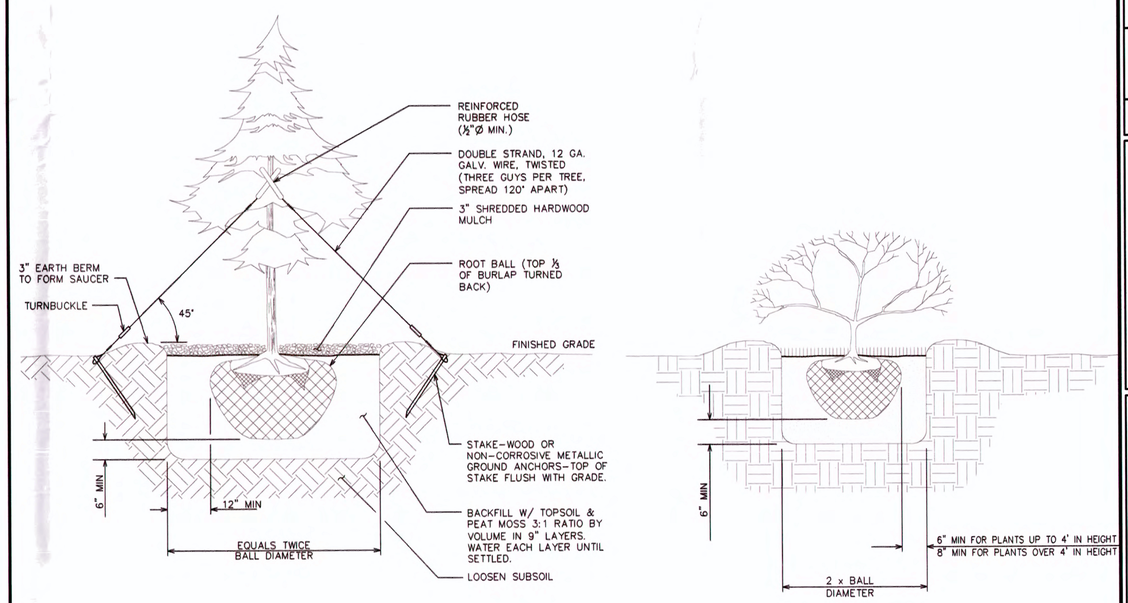


**LANDSCAPING DETAILS**

SCALE: N.T.S.

PLANS PREPARED FOR:

T-Mobile

185 FAIRCHILD STREET
CHARLESTON, SC 29492
OFFICE: (843) 216-1210

PLANS PREPARED BY:

TOWER ENGINEERING PROFESSIONALS
326 TRYON ROAD
RALEIGH, NC 27603-5263
OFFICE: (919) 661-6351
FAX: (919) 661-6350
N.C. LICENSE # C-1794

| REV | DATE | ISSUED FOR: |
|---|---|---|
| 2 | 02-11-15 | CONSTRUCTION |
| 1 | 01-30-15 | PRELIMINARY |
| 0 | 01-29-15 | PRELIMINARY |

DRAWN BY: BAM CHECKED BY: JJC

PROJECT INFORMATION:

**ERWIN ROAD**
**TMO ID: 5RA0532D**
**SKYWAY SITE #: NC-08828**

5022 KERLEY ROAD
DURHAM, NC 27705
(ORANGE COUNTY)

SEAL:

NORTH CAROLINA PROFESSIONAL SEAL 037884 ENGINEER JOSHUA J. COSGROVE

February 11, 2015

SHEET TITLE: **LANDSCAPING PLAN & DETAILS**

SHEET NUMBER: **C-3**

REVISION: 2

TEP #: 50661

## GENERAL STRUCTURAL NOTES:

SPECIFICATION/CODES:

1. CONCRETE WORK SHALL BE PERFORMED IN ACCORDANCE WITH LATEST EDITION OF THE ACI CODE.
2. REINFORCING STEEL SHALL BE PLACED IN ACCORDANCE WITH THE CONCRETE REINFORCING STEEL INSTITUTE (CRSI) "MANUAL OF STANDARD PRACTICE".
3. DESIGN SHALL BE PER NORTH CAROLINA BUILDING CODE, 2012 EDITION.

## FOUNDATION NOTES:

1. FOUNDATION DESIGN BASED ON 2000 PSF SOIL BEARING CAPACITY. IF OTHER CONDITIONS EXIST, FOUNDATION SHALL BE REDESIGNED. CONTRACTOR SHALL HAVE SOIL BEARING CAPACITY VERIFIED BY A LICENSED PROFESSIONAL GEOTECHNICAL ENGINEER PRIOR TO INITIATION OF CONSTRUCTION ACTIVITIES.
2. CONCRETE SHALL BE 3,000 PSI.
3. REBAR Fy = 60,000 PSI.
4. ALL BACKFILL SHALL BE THOROUGHLY COMPACTED TO A MINIMUM OF 95% DENSITY USING THE MODIFIED PROCTOR METHOD.

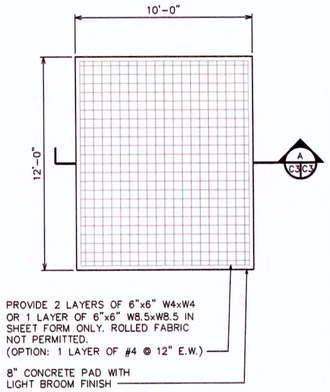


### FOUNDATION PLAN

SCALE: ¼" = 1'-0"

0 4 8 SCALE IN FEET

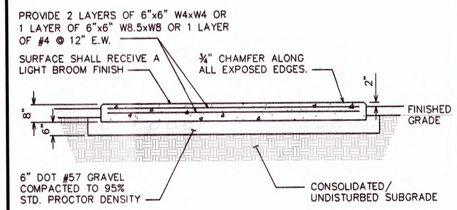


### SECTION

SCALE: ⅜" = 1'-0" A C3 C3

0 2 4 SCALE IN FEET

## NOTE:

(2) GROUND LEADS FROM BOTH TOWER BOTTOM GROUND BAR AND ICE BRIDGE GROUND BAR

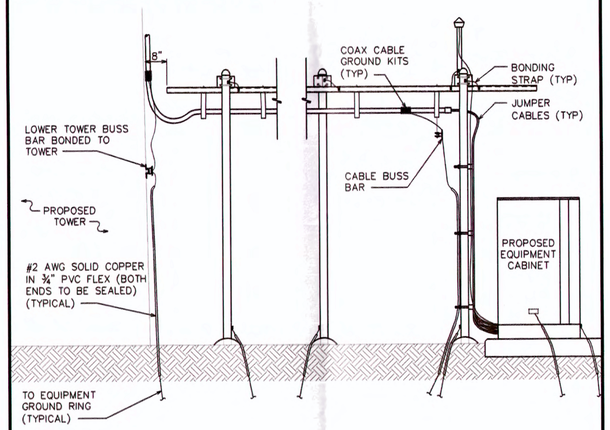


### ICE BRIDGE DETAIL / COAX / GROUND BAR ELEVATION

SCALE: N.T.S.

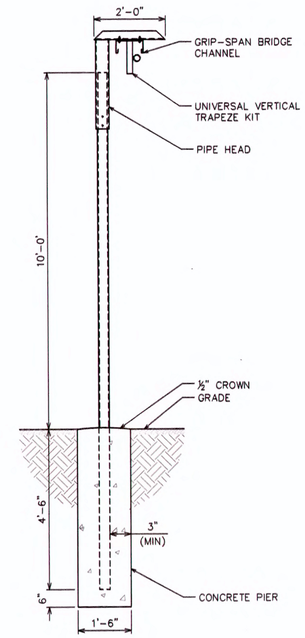


### ICE BRIDGE DETAIL

SCALE: ½" = 1'-0"

0 2 4 SCALE IN FEET

## DRAWING NOTES:

1. 1x6 TREATED WOOD. ATTACH TO 2x4'S WITH HOT DIPPED GALVANIZED STEEL SCREWS.
2. 2x4 TREATED WOOD. ATTACH TO GALVANIZED FENCE POST WITH SUPPORT BRACKET AND ⅜"ø X 1" LAG BOLT (TYP.)
3. GALVANIZED FENCE POST
4. WOOD FENCE TO BE APPROPRIATELY STAINED OR PAINTED.

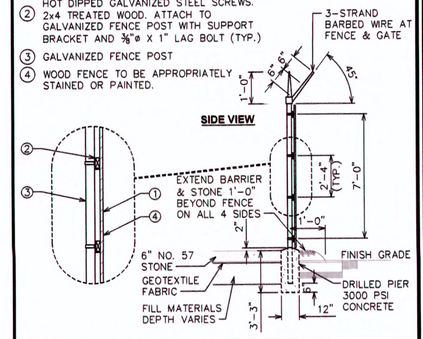


### TYPICAL FENCE ELEVATION

SCALE: N.T.S.

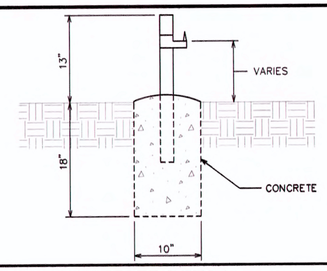


### GATE STOP / KEEPER DETAIL

SCALE: N.T.S.

## NOTE:

CONTRACTOR TO STUB-UP REQUIRED CONDUITS PRIOR TO POURING CONCRETE PER EQUIPMENT CABINET INSTRUCTIONS

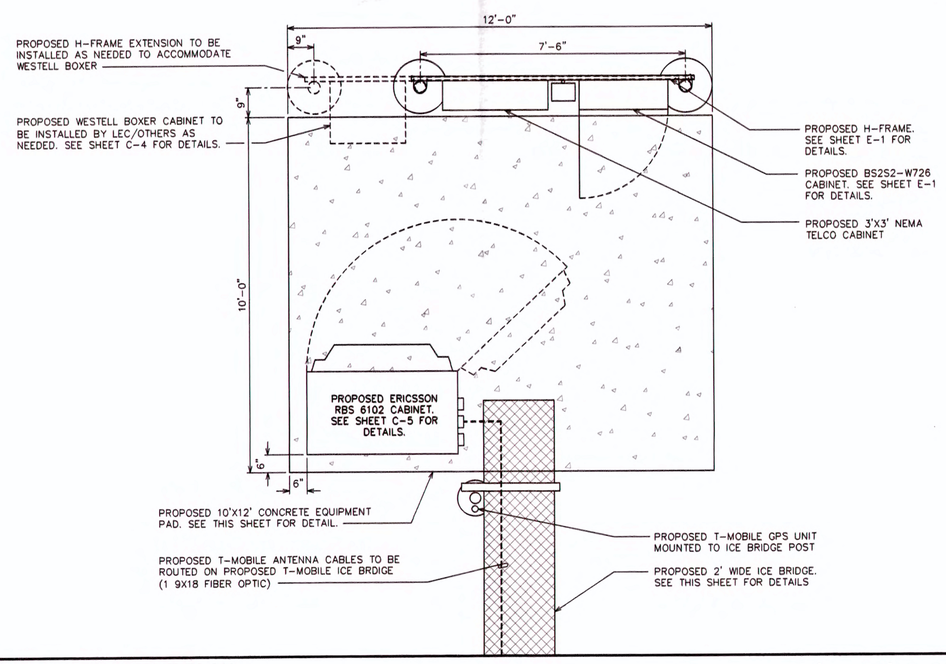


### EQUIPMENT LAYOUT PLAN

SCALE: ½" = 1'-0"

0 2 4 SCALE IN FEET

## FENCE NOTE:

FENCE TO BE MAINTAINED BY SKYWAY TOWERS. ONLY TREATED LUMBER AND HOT DIPPED GALVANIZED STEEL SCREWS ARE TO BE USED.

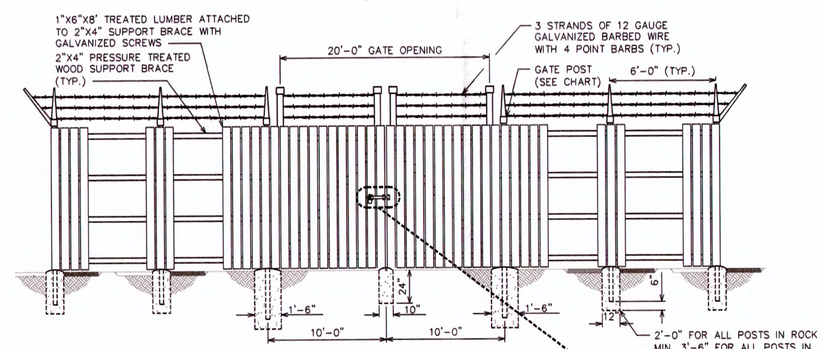


### TYPICAL FENCE ELEVATION

SCALE: N.T.S.

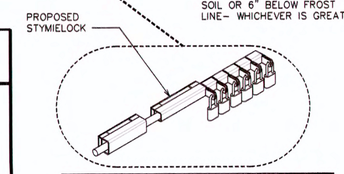


| 8' HIGH FENCE | FOOTINGS |
|---|---|
| LINE POST – 2" O.D. | 9" X 36" |
| CORNER POST – 3" O.D. | 12" X 48" |
| DRIVEWAY GATE POST – 4" O. D. | 12" X 48" |
| WALKWAY GATE POST – 3" O.D. | 12 X 48" |

| WOODEN FENCE ATTACHMENT BRACKET | |
|---|---|
| LINE POST – 2" O.D. | 2"ø ATTACH. BRACKET |
| CORNER POST – 3" O.D. | 3"ø ATTACH. BRACKET |
| DRIVEWAY GATE POST – 4" O. D. | 4"ø ATTACH. BRACKET |

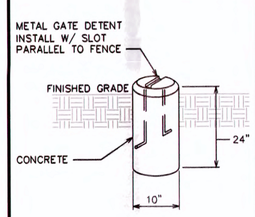


### GATE DETENT DETAIL

SCALE: N.T.S.

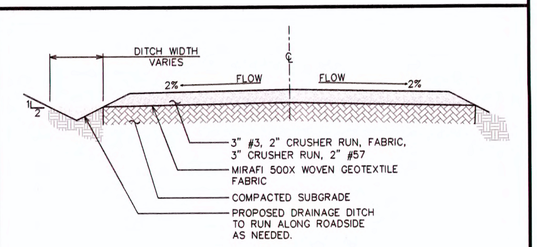


### STANDARD ROAD SECTION (GOOD SUBGRADE)

SCALE: N.T.S.


PLANS PREPARED FOR:
T-Mobile
185 FAIRCHILD STREET
CHARLESTON, SC 29492
OFFICE: (843) 216-1210

PLANS PREPARED BY:
TOWER ENGINEERING PROFESSIONALS
326 TRYON ROAD
RALEIGH, NC 27603-5263
OFFICE: (919) 661-6351
FAX: (919) 661-6350
N.C. LICENSE # C-1794


| REV | DATE | ISSUED FOR: |
|---|---|---|
| 2 | 02-11-15 | CONSTRUCTION |
| 1 | 01-30-15 | PRELIMINARY |
| 0 | 01-29-15 | PRELIMINARY |

DRAWN BY: DAM CHECKED BY: JJC

PROJECT INFORMATION:
ERWIN ROAD
TMO ID: 5RA0532D
SKYWAY SITE #: NC-08828
5022 KERLEY ROAD
DURHAM, NC 27705
(ORANGE COUNTY)

SEAL:

February 11, 2015

SHEET TITLE: CIVIL DETAILS I

SHEET NUMBER: C-4

REVISION: 2

TEP # 50061

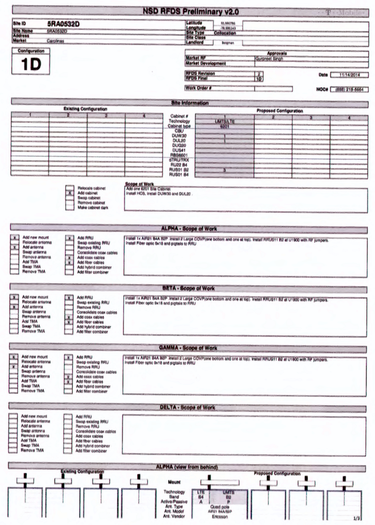


## RF CABLE DETAILS

SCALE: N.T.S.

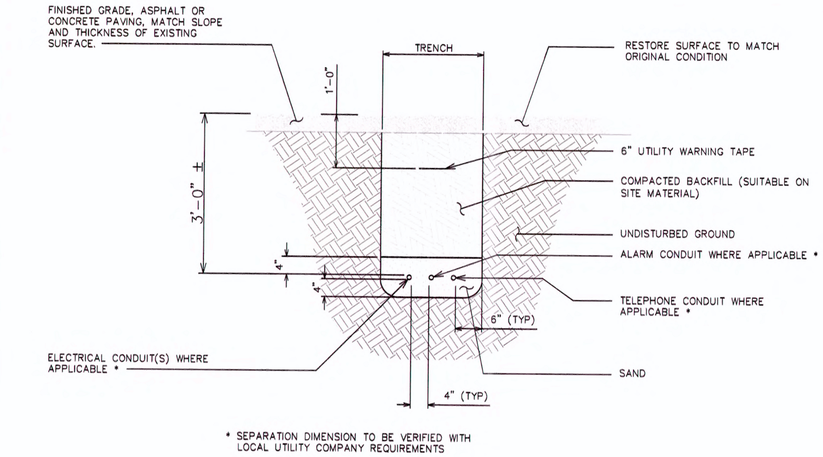


## NOTES:

1. ACTUAL SEPERATION OF CONDUITS TO BE DETERMINED BY SITE SPECIFIC REQUIREMENTS.
2. UNDERGROUND CONDUIT TRENCH TO BE LOCATED AS CLOSE TO COMPOUND FENCE AS POSSIBLE WITHOUT COMPROMISING THE INTEGRITY OF THE FENCE.
3. PROVIDE PVC CONDUIT BELOW GRADE EXCEPT AS NOTED BELOW.
4. PROVIDED RGS CONDUIT AND ELBOWS AT STUB-UP LOCATIONS (I.E. SERVICE POLES, EQUIPMENT, ETC.)
5. PROVIDE RGS CONDUIT FOR INSTALLATIONS BELOW PARKING LOTS AND ROADWAYS.

## UNDERGROUND CONDUIT(S) TRENCH DETAIL

SCALE: ¾" = 1'-0"

0 1 2
SCALE IN FEET

## NOTE:

MOUNT PER MANUFACTURER'S SPECIFICATIONS.

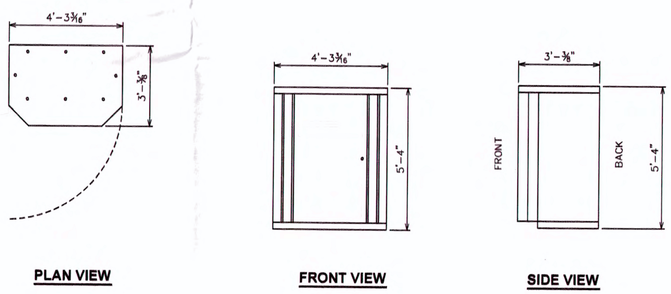


## RBS DETAIL

SCALE: ⅜" = 1'-0"

0 2 4
SCALE IN FEET

## NOTES:

1. SIGNS SHALL BE FABRICATED FROM CORROSION RESISTANT PRESSED METAL, AND PAINTED WITH LONG LASTING UV RESISTANT COATINGS.
2. SIGNS (EXCEPT WHERE NOTED OTHERWISE) SHALL BE MOUNTED TO THE TOWER, GATE AND FENCE USING A MINIMUM OF 9 GAUGE ALUMINUM WIRE, HOG RINGS (AS UTILIZED IN FENCE INSTALLATIONS) OR BRACKETS WHERE NECESSARY. BRACKETS SHALL BE OF SIMILAR METAL AS THE STRUCTURE TO AVOID GALVANIC CORROSION.
3. ADDITIONAL E911 ADDRESS SIGNS ARE REQUIRED AT EACH ACCESS ROAD GATE LEADING TO THE COMPOUND AS WELL AS ON THE COMPOUND GATE ITSELF.
4. ADDITIONAL FCC REGISTRATION # SIGNS ARE REQUIRED AT EACH ACCESS ROAD GATE LEADING TO THE COMPOUND AS WELL AS ON THE COMPOUND GATE ITSELF. SIGN SHALL MEASURE (20" LONG x 4" TALL). THE LETTERS SHALL BE 1" AND THE NUMBERS SHALL BE 2".
5. RECOMMENDED SOURCES FOR OBTAINING SIGNAGE:

ST. CLAIR SIGNS
3184 WADE HAMPTON BOULEVARD
TAYLORS, SC 29687
(864) 244-0040

EXCEL SIGN & DECAL
1509 NORTH MILPITAS BLVD.
MILPITAS, CA 95035
(408) 942-8881

RF EXPOSURE SIGNS
RICHARD TELL ASSOCIATES
3433 RINGSTAR ROAD, SUITE 3
NORTH LAS VEGAS, NV 89030
(702) 645-3338

**ATTENTION**

THE SITE SHALL ONLY CONTAIN SIGNAGE AS MANDATED BY THE FCC.

1'-8"

4"

**FCC TOWER REGISTRATION NO.:**

**1234567**

WHITE BACKGROUND WITH BLACK LETTERING

QUANTITY: (2)

TO BE MOUNTED ON: COMPOUND ACCESS GATE
ACCESS DRIVE GATE
(SEE NOTE 4)

NOTE: NUMBER SHOWN IS GENERIC, CONTRACT CONSTRUCTION MANAGER FOR ACTUAL FCC TOWER REG. #.

6'-0"

4'-0"

SKYWAY TOWERS
**SITE NAME: ERWIN ROAD**
**SKYWAY SITE #: NC-08828**
**5022 KERLEY ROAD**
**DURHAM, NC 27705**

**FOR LEASE INFORMATION**
**CALL: 1-813-960-6211**

24 HOUR EMERGENCY SERVICE
**CALL: 1-813-960-6211**

CONTRACTOR SHALL VERIFY ADDRESS PRIOR TO ORDERING SIGNAGE.

RED LETTERS (ALL OTHERS BLACK)

WHITE BACKGROUND WITH BLACK BORDER

QUANTITY: (2)

TO BE MOUNTED ON: COMPOUND ACCESS GATE
ACCESS DRIVE GATE
(SEE NOTE 3)

1'-6"

1'-0"

T··Mobile·

IN CASE OF EMERGENCY
CALL: (877)611-5868

SITE DESIGNATION 5RA0532D

EMERGENCY SIGN
(RED METAL W/ WHITE LETTERING)

11"

8½"

NOTICE

RF Controlled Area Beyond This Point

Radio frequency ("RF") emissions may exceed FCC Standards for general public exposure. Only authorized workers permitted to enter.

For your notice:
Obey all posted signs.
Maintain minimums distance of 7 feet from all antennas.
Do not step in front of antennas.

For further information, please call (877)611-5868, and reference Site Number: BAN07181

RF NOTICE SIGN
(WHITE METAL SIGN W/BLACK LETTERING)

## TYPICAL SIGNS AND SPECIFICATIONS

SCALE: N.T.S.

## NOTES:

1. MOUNT PER MANUFACTURER'S SPECIFICATIONS.
2. WESTELL BOXER CABINET TO BE INSTALLED ON H-FRAME EXTENSION BY OTHERS AS NEEDED.

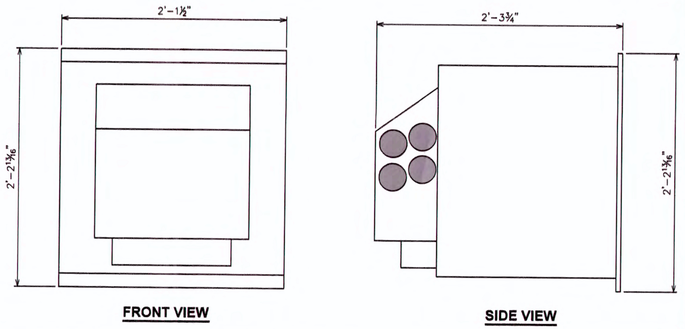


## WESTELL BOXER DETAIL

SCALE: 1½" = 1'-0"

0 1 2
SCALE IN FEET

PLANS PREPARED FOR:

T··Mobile·

185 FAIRCHILD STREET
CHARLESTON, SC 29492
OFFICE: (843) 216-1210

PLANS PREPARED BY:

**TOWER ENGINEERING PROFESSIONALS**
326 TRYON ROAD
RALEIGH, NC 27603-5263
OFFICE: (919) 661-6351
FAX: (919) 661-6350
N.C. LICENSE # C-1794

| REV | DATE | |
|---|---|---|
| 2 | 02-11-15 | CONSTRUCTION |
| 1 | 01-30-15 | PRELIMINARY |
| 0 | 01-29-15 | PRELIMINARY |

ISSUED FOR:

DRAWN BY: DAM
CHECKED BY: JJC

PROJECT INFORMATION:

**ERWIN ROAD**
**TMO ID: 5RA0532D**
**SKYWAY SITE #: NC-08828**
5022 KERLEY ROAD
DURHAM, NC 27705
(ORANGE COUNTY)

SEAL:

NORTH CAROLINA PROFESSIONAL SEAL 037894 ENGINEER JUSTIN J. COSGROVE

February 11, 2015

SHEET TITLE: **CIVIL DETAILS II**

SHEET NUMBER: **C-5**

REVISION: 2

TEP #: 50061

# ELECTRICAL NOTES:

### SCOPE:

1. SHALL INCLUDE ALL LABOR, MATERIALS AND APPLIANCES REQUIRED FOR THE FURNISHING, INSTALLING AND TESTING, COMPLETE AND READY FOR OPERATION OF ALL WORK SHOWN ON THE DRAWING AS SPECIFIED HEREIN:
   1. ELECTRIC SERVICE
   2. CONDUIT AND RACEWAY
   3. CONDUCTORS
   4. MISCELLANEOUS MATERIALS
   5. TELEPHONE CONDUITS
   6. LIGHTNING ARRESTING SYSTEM

### CODES

1. THE INSTALLATION SHALL COMPLY WITH ALL APPLICABLE LAWS AND CODES. THESE INCLUDE BUT ARE NOT LIMITED TO THE LATEST EDITIONS OF:
   A. THE NATIONAL ELECTRICAL SAFETY CODE
   B. THE NATIONAL ELECTRIC CODE – NFPA–70
   C. THE INTERNATIONAL ELECTRIC CODE – IEC
   D. LOCAL AND STATE AMENDMENTS
   E. REGULATIONS OF THE SERVING UTILITY COMPANY
   F. NCEC
2. ALL PERMITS REQUIRED SHALL BE OBTAINED BY THE CONTRACTOR.
3. AFTER COMPLETION AND FINAL INSPECTION OF THE WORK, THE OWNER SHALL BE FURNISHED A CERTIFICATE OF COMPLETION AND APPROVAL.

### TESTING

1. UPON COMPLETION OF THE INSTALLATION, OPERATE AND ADJUST ALL EQUIPMENT AND SYSTEMS TO MEET SPECIFIED PERFORMANCE REQUIREMENTS. ALL TESTING SHALL BE DONE BY QUALIFIED PERSONNEL.

### GUARANTEE

1. IN ADDITION TO THE GUARANTEE OF THE EQUIPMENT BY THE MANUFACTURER, EACH PIECE OF EQUIPMENT SPECIFIED HEREIN SHALL ALSO BE GUARANTEED FOR DEFECTS OF MATERIAL OR WORKMANSHIP OCCURRING DURING A PERIOD OF ONE (1) YEAR FROM FINAL ACCEPTANCE OF THE WORK BY THE OWNER. WITHOUT EXPENSE TO THE OWNER ALL WARRANTEE CERTIFICATES & GUARANTEES FURNISHED BY THE MANUFACTURERS SHALL BE TURNED OVER TO THE OWNER.

### CO-ORDINATION:

1. CONTRACTOR SHALL COORDINATE ALL WORK WITH THE POWER AND TELEPHONE COMPANIES AND SHALL COMPLY WITH ALL SERVICE REQUIREMENTS OF EACH UTILITY COMPANY.

### EXAMINATION OF SITE

1. PRIOR TO BEGINNING WORK, THE CONTRACTOR SHALL VISIT THE SITE OF THE JOB AND SHALL FAMILIARIZE HIMSELF WITH ALL CONDITIONS AFFECTING THE PROPOSED ELECTRICAL INSTALLATION AND SHALL MAKE PROVISIONS AS TO THE COST THEREOF. FAILURE TO COMPLY WITH THE INTENT OF THIS PARAGRAPH WILL IN NO WAY RELIEVE THE CONTRACTOR OF PERFORMING ALL WORK NECESSARY FOR A COMPLETE AND WORKING SYSTEM OR SYSTEMS.

### CUTTING, PATCHING AND EXCAVATION:

1. COORDINATION OF ALL SLEEVES, CHASES, ETC., WILL BE REQUIRED PRIOR TO THE CONSTRUCTION OF ANY PORTION OF THE WORK. ALL CUTTING AND PATCHING OF WALLS, PARTITIONS, FLOORS, AND CHASES IN CONCRETE, WOOD, STEEL OR MASONRY SHALL BE DONE AS PROVIDED ON THE DRAWINGS.
2. ALL NECESSARY EXCAVATIONS AND BACKFILLING INCIDENTAL TO THE WORK UNLESS SPECIFICALLY NOTED OTHERWISE ON THE DRAWING SHALL BE PROVIDED BY THIS CONTRACTOR.
3. SEAL ALL PENETRATION THROUGH WALL AND FLOORS WITH APPROVED GROUT.

### EXTERIOR CONDUIT:

1. ALL EXPOSED CONDUIT SHALL BE NEATLY INSTALLED AND RUN PARALLEL OR PERPENDICULAR TO STRUCTURAL ELEMENTS. SUPPORTS AND MOUNTING HARDWARE SHALL BE HOT DIPPED GALVANIZED STEEL.

### RACEWAYS

1. ALL CONDUCTORS SHALL BE INSTALLED IN CONDUIT. ALL CONDUIT SHALL BE RIGID STEEL, EMT OR SCH40 PVC AS INDICATED ON THE DRAWINGS.
2. WHERE INSTALLED ON EXTERIORS AND EXPOSED TO DAMAGE, ALL CONDUIT SHALL BE RIGID STEEL. ALUMINUM CONDUIT SHALL NOT BE ALLOWED.
3. CONCEALED CONDUIT IN WALLS OR INTERIOR SPACES ABOVE GRADE MAY BE EMT.
4. UNDERGROUND CONDUITS SHALL BE RIGID STEEL OR SCHEDULE 40 PVC AS INDICATED ON THE DRAWINGS.
5. ALL CONDUIT RUNS SHALL USE APPROVED COUPLINGS AND CONNECTORS. PROVIDE INSULATED BUSHING FOR ALL CONDUIT TERMINATIONS. ALL CONDUIT RUNS IN A WET LOCATION SHALL HAVE WATERPROOF FITTINGS.
6. PROVIDE SUPPORTS FOR ALL CONDUITS IN ACCORDANCE WITH NEC REQUIREMENTS. ALL CONDUITS SHALL BE SIZED AS REQUIRED BY NEC.
7. BURIAL DEPTH OF ALL CONDUITS SHALL BE AS REQUIRED BY CODE FOR EACH SPECIFIC CONDUIT TYPE AND APPLICATION.
8. CONDUIT ROUTES ARE SCHEMATIC. CONTRACTOR SHALL FIELD VERIFY BEFORE BID. COORDINATE ROUTE WITH WIRELESS CARRIER AND BUILDING OWNER.

### EQUIPMENT:

1. ALL DISCONNECT SWITCHES SHALL BE SERVICE ENTRANCE RATED, HEAVY DUTY TYPE.
2. NEW CIRCUIT BREAKERS SHALL BE RATED TO WITHSTAND THE MAXIMUM AVAILABLE FAULT CURRENT AS DETERMINED BY THE LOCAL UTILITY. CONTRACTOR SHALL VERIFY MAXIMUM AVAILABLE FAULT CURRENT, AND COORDINATE INSTALLATION WITH THE LOCAL UTILITY BEFORE STARTING WORK.

### CONDUCTORS

1. FURNISH AND INSTALL CONDUCTORS CALLED FOR IN THE DRAWINGS. ALL CONDUCTORS SHALL HAVE TYPE THWN (MIN) (75° C) INSULATION, RATED FOR 600 VOLTS.
2. ALL CONDUCTORS SHALL BE COPPER, THE USE OF ALUMINUM CONDUCTORS SHALL NOT BE ALLOWED. ALL CONDUCTORS SHALL BE UL LISTED AND SHALL BE PROVIDED AND INSTALLED AS FOLLOWS:
   A. MINIMUM WIRE SIZE SHALL BE #12 AWG.
   B. ALL CONDUCTORS SIZE #8 AND LARGER SHALL BE STRANDED. CONDUCTORS SIZED #10 AND SMALLER MAY BE SOLID OR STRANDED.
   C. CONNECTION FOR #10 AWG AND SMALLER SHALL BE BY TWISTING TIGHT AND INSTALLING INSULATED PRESSURE OR WIRE NUT CONNECTIONS.
   D. CONNECTION FOR #8 AWG AND LARGER SHALL BE BY USE OF STEEL CRIMP–ON SLEEVES WITH NYLON INSULATOR.
3. ALL CONDUCTORS SHALL BE COLOR CODED IN ACCORDANCE WITH NEC STANDARDS.
4. THE RACEWAY SYSTEM SHALL BE COMPLETE BEFORE INSTALLING CONDUCTORS

### PENETRATIONS:

1. CONTRACTOR SHALL COMPLY WITH UL PENETRATION DETAILS FOR PENETRATIONS OF ALL RATED WALLS, ROOF, ETC.

### GROUNDING

1. ALL ELECTRICAL NEUTRALS, RACEWAYS AND NON–CURRENT CARRYING PARTS OF ELECTRICAL EQUIPMENT AND ASSOCIATED ENCLOSURES SHALL BE GROUNDED IN ACCORDANCE WITH NEC ARTICLE 250. THIS SHALL INCLUDE NEUTRAL CONDUCTORS, CONDUITS, SUPPORTS, CABINETS, BOXES, GROUND BUSSES, ETC. THE NEUTRAL CONDUCTOR FOR EACH SYSTEM SHALL BE GROUNDED BY ONE POINT ONLY.
2. PROVIDE GROUND CONDUCTOR IN ALL RACEWAYS.
3. PROVIDE BONDING AND GROUND TO MEET NFPA 780 – LIGHTNING PROTECTION AS A MINIMUM.
4. PROVIDE GROUNDING SYSTEM AS INDICATED ON THE DRAWINGS, AS REQUIRED BY THE NATIONAL ELECTRIC CODE AND RADIO EQUIPMENT MANUFACTURER.

## ABBREVIATIONS AND LEGEND

| | | | |
|---|---|---|---|
| A | – AMPERE | PVC | – SCH40 RIGID NON–METALLIC CONDUIT |
| AFG | – ABOVE FINISHED GRADE | RGS | – RIGID GALVANIZED STEEL CONDUIT |
| ATS | – AUTOMATIC TRANSFER SWITCH | SW | – SWITCH |
| AWG | – AMERICAN WIRE GAUGE | TGB | – TOWER GROUND BAR |
| BCW | – BARE COPPER WIRE | UL | – UNDERWRITERS LABORATORIES |
| BFG | – BELOW FINISHED GRADE | V | – VOLTAGE |
| BKR | – BREAKER | W | – WATTS |
| C | – CONDUIT | XFMR | – TRANSFORMER |
| CKT | – CIRCUIT | XMTR | – TRANSMITTER |
| DISC | – DISCONNECT | | |
| EGR | – EXTERNAL GROUND RING | | |
| EMT | – ELECTRIC METALLIC TUBING | | |
| FSC | – FLEXIBLE STEEL CONDUIT | | |
| GEN | – GENERATOR | | |
| GPS | – GLOBAL POSITIONING SYSTEM | | |
| GRD | – GROUND | | |
| IGB | – ISOLATED GROUND BAR | | |
| IGR | – INTERIOR GROUND RING (HALO) | | |
| KW | – KILOWATTS | | |
| NEC | – NATIONAL ELECTRIC CODE | | |
| PCS | – PERSONAL COMMUNICATION SYSTEM | | |
| PH | – PHASE | | |
| PNL | – PANEL | | |
| PNLBD | – PANELBOARD | | |

| | |
|---|---|
| -------E------- | UNDERGROUND ELECTRICAL CONDUIT |
| -------T------- | UNDERGROUND TELEPHONE CONDUIT |
| | KILOWATT–HOUR METER |
| ---------- | UNDERGROUND BONDING AND GROUNDING CONDUCTOR. |
| ⊘ | GROUND ROD |
| ● | CADWELD |
| ⊠ | GROUND ROD WITH INSPECTION WELL |

## NOTE:

CONTRACTOR TO INSTALL PULL BOX EVERY 3RD 90° TURN (MAX.)

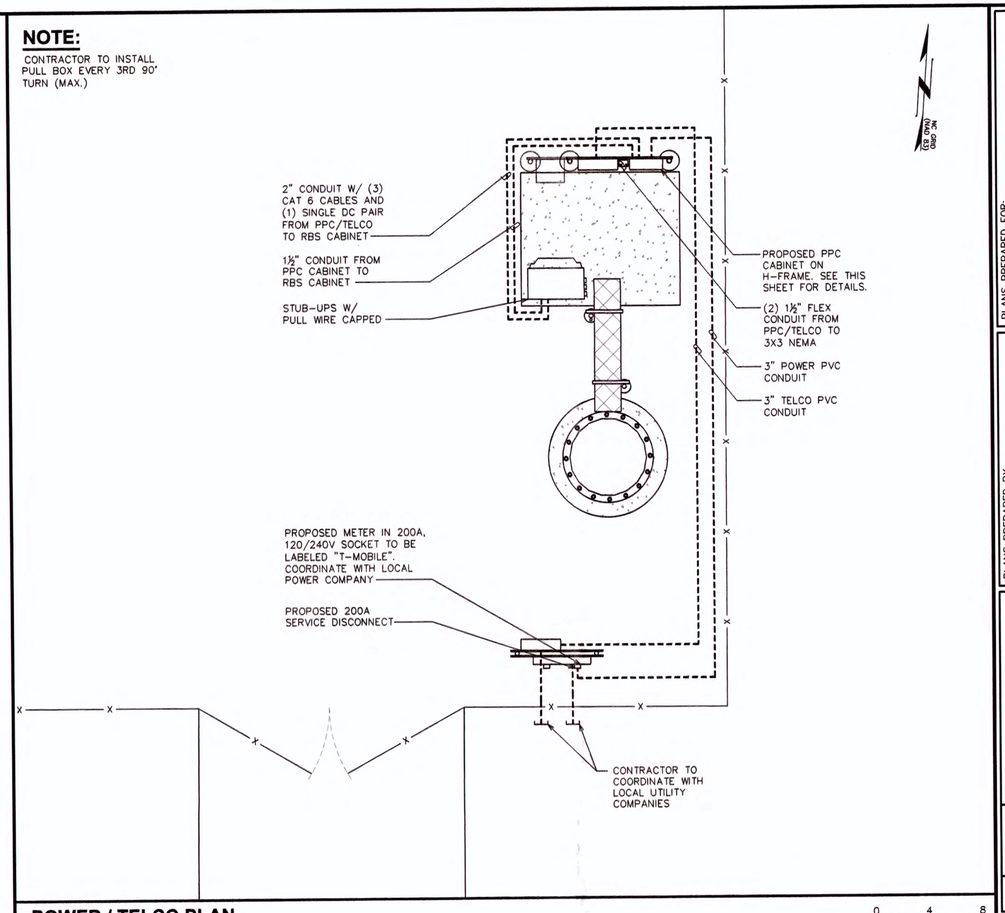


## POWER / TELCO PLAN

SCALE: 3/16" = 1'–0"

0 4 8
SCALE IN FEET

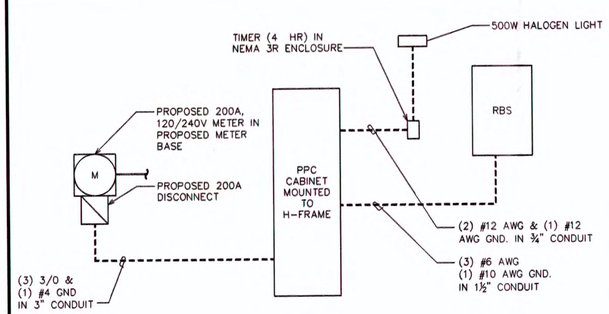


## ONE-LINE DIAGRAM NOTES:

1. ELECTRICAL SERVICE SHALL BE 200A, 240/120V, 1ø, 3W.
2. FOR COMPLETE INTERNAL WIRING AND ARRANGEMENT, REFER TO VENDOR PRINTS PROVIDED BY EQUIPMENT MANUFACTURER.

## NOTES:

1. CONTRACTOR SHALL VERIFY AVAILABLE FAULT CURRENT WITH POWER COMPANY AND ENSURE ALL ELECTRICAL EQUIPMENT IS SUITABLE FOR AVAILABLE FAULT CURRENT.
2. CONTRACTOR SHALL COORDINATE UTILITY SERVICES WITH LOCAL UTILITY COMPANIES. VERIFY ALL REQUIREMENTS WITH UTILITY COMPANY STANDARDS.
3. ONE–LINE DIAGRAM IS SCHEMATIC ONLY AND NOT INDICATIVE OF ACTUAL EQUIPMENT LAYOUT.
4. CONTRACTOR SHALL LABEL METER SOCKET WITH SERVICE OWNER NAMEPLATE W/ ½" MINIMUM LETTERS.

## ONE-LINE DIAGRAM

SCALE: N.T.S.

## NOTES:

1. WATT–HOUR SOCKETS/SERVICE DISCONNECT MEANS. UTILITY COMPANY TO PROVIDE METERS. PROVIDE IN ACCORDANCE WITH UTILITY COMPANY REQUIREMENTS.
2. ALL NEW STRUCTURAL STEEL SHALL BE HOT DIP GALVANIZED IN ACCORDANCE WITH ASTM A123 G90 AFTER FABRICATION.
3. FIELD ABRASIONS SHALL BE TOUCH UP PAINTED WITH ZINC RICH GALVANIZING REPAIR IN ACCORDANCE WITH ASTM A780.
4. ALL EXPOSED ENDS OF CONDUIT SHALL HAVE WEATHERPROOF CAPS.
5. PROVIDE 200LB. TEST PULL WIRES IN EACH TELEPHONE AND POWER CONDUIT. STUB CONDUITS INTO ENCLOSURE AND LABEL.
6. THE POWER COMPANY SHALL TERMINATE THE POWER CABLES (SUPPLIED AND INSTALLED BY THE POWER COMPANY) AT THE UTILITY METERS LOCATED ON THE EQUIPMENT RACK.

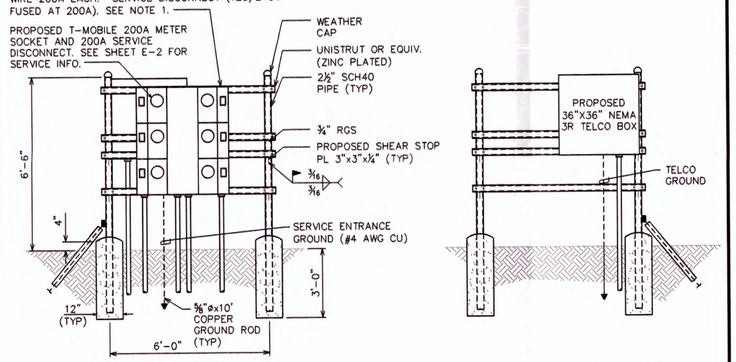


SERVICE RACK - FRONT

SERVICE RACK - REAR

## SKYWAY SERVICE RACK DETAIL

SCALE: N.T.S.

## NOTES:

1. ALL EQUIPMENT SHALL BE GROUNDED
2. ALL ELECTRICAL ENCLOSURES TO BE NEMA 3R RATED
3. SEE SITE PLAN FOR GENERAL ROUTING OF ALL CONDUITS. DETERMINE EXACT ROUTINGS IN FIELD.
4. ELECTRICAL EQUIPMENT SHALL BE A MIN. 3'–0" FROM ANY STRUCTURE.
5. ALL COVERPLATES TO BE WEATHERPROOF.
6. INSTALL CAPS ON ALL OPEN POSTS
7. INSTALL UNISTRUT BEHIND SUPPORT POST AS SHOWN
8. SEE SHEET E-3 FOR PPC SCHEDULE.

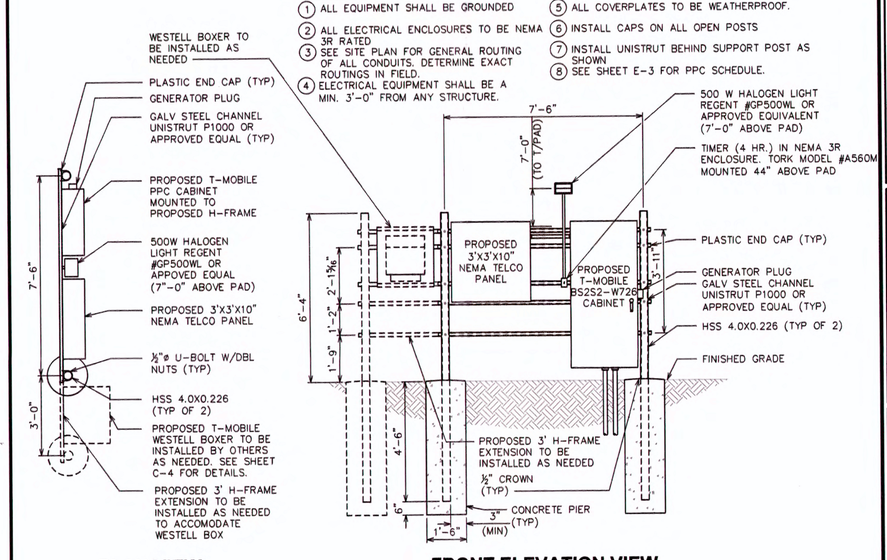


PLAN VIEW

FRONT ELEVATION VIEW

## T-MOBILE PPC RACK DETAIL

SCALE: N.T.S.

PLANS PREPARED FOR:

T-Mobile
185 FAIRCHILD STREET
CHARLESTON, SC 29492
OFFICE: (843) 216-1210

PLANS PREPARED BY:

TOWER ENGINEERING PROFESSIONALS
326 TRYON ROAD
RALEIGH, NC 27603-5283
OFFICE: (919) 661-6351
FAX: (919) 661-6350
N.C. LICENSE # C-1794

| REV | DATE | ISSUED FOR: |
|---|---|---|
| 2 | 02-11-15 | CONSTRUCTION |
| 1 | 01-30-15 | PRELIMINARY |
| 0 | 01-29-15 | PRELIMINARY |

DRAWN BY: BAM CHECKED BY: JJC

PROJECT INFORMATION:

ERWIN ROAD
TMO ID: 5RA0532D
SKYWAY SITE #: NC-08828
5022 KERLEY ROAD
DURHAM, NC 27705
(ORANGE COUNTY)

SEAL:

SEAL 042109 NORTH CAROLINA PROFESSIONAL ENGINEER MARK A. QUAKENBUSH

February 11, 2015

SHEET TITLE: ELECTRICAL NOTES & DETAILS

REVISION: 2

TEP #: 500561

SHEET NUMBER: E-1

## GROUNDING NOTES:

1. CONTRACTOR SHALL VERIFY THAT GROUNDING ELECTRODES SHALL BE CONNECTED IN A RING USING #2 AWG BARE TINNED COPPER WIRE. THE TOP OF THE GROUND RODS AND THE RING CONDUCTOR SHALL BE 2 FEET BELOW FINISHED GRADE. GROUNDING ELECTRODES SHALL BE DRIVEN ON 10'-0" CENTERS (PROVIDE AND INSTALL AS REQUIRED. REQUIRED PER PLAN BELOW).
2. BONDING OF THE GROUNDED CONDUCTOR (NEUTRAL) AND THE GROUNDING CONDUCTOR SHALL BE AT THE SERVICE DISCONNECTING MEANS. BONDING JUMPER SHALL BE INSTALLED PER N.E.C. ARTICLE 250.30.
3. GROUND RING CONNECTION CONDUCTORS SHALL BE OF EQUAL LENGTH, MATERIAL, AND BONDING TECHNIQUE.
4. CONTRACTOR SHALL ENSURE GROUND RING IS WITHIN 12 TO 36 INCEHES OF THE EQUIPMENT PAD. PROVIDE AND INSTALL GROUNDING CONNECTIONS SHOWN BELOW AS NEEDED PER EXISTING SITE GROUNDING SYSTEM. CONTRACTOR SHALL VERIFY A:; EXISTING SITE GROUNDING CONDITIONS BEFORE STARTING WORK OR PURCHASING EQUIPMENT
5. BOND GROUND BAR TO EXTERNAL GROUND RING WITH 1 RUN OF #2 BARE, TINNED, SOLID COPPER CONDUCTOR IN PVC. CONNECT BAR END WITH 2 HOLE LUG, AND "CADWELD" THE OTHER END TO THE EXTERNAL GROUND ROD.
6. ALL DOWN CONDUCTORS MUST GO DOWN
7. CONTRACTOR SHALL NOTIFY THE CONSTRUCTION MANAGER WHEN THE GROUNDING SYSTEM IS COMPLETE. THE CONSTRUCTION MANAGER SHALL INSPECT THE GROUNDING SYSTEM PRIOR TO BACKFILLING

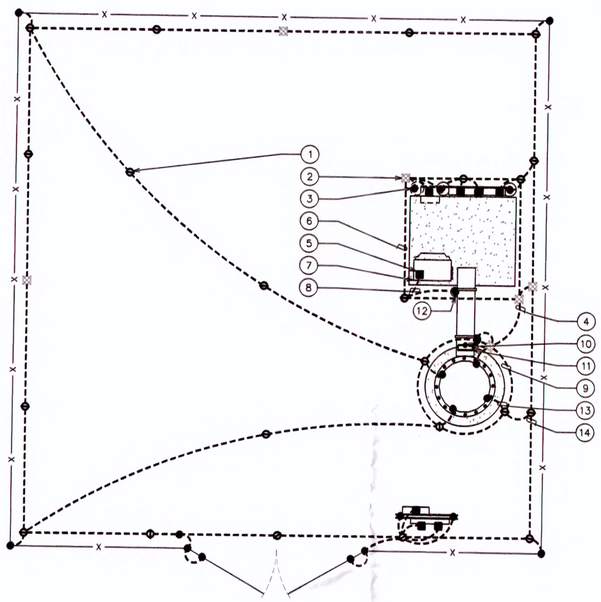


## DRAWING NOTES:

1. GROUND ROD ⅝"x10' LONG (TYP)
2. GROUND ROD WITH INSPECTION WELL (TYP)
3. CADWELD (TYP)
4. #2 TINNED SOLID COPPER GROUND WIRE FROM TOWER GROUND RING TO GROUND ROD IN EQUIPMENT GROUND RING. IF DISTANCE IS GREATER THAN 20' BUT LESS THAN 30' INSTALL A GROUND ROD AT THE CENTER.
5. 2-HOLE LUG MECHANICAL CONNECTION (TYP)
6. #2 TINNED SOLID COPPER EQUIPMENT GROUND RING
7. PROPOSED EQUIPMENT CABINET
8. #2 TINNED SOLID COPPER GROUND WIRE FROM GROUND RING TO BUSS BAR INSIDE CABINET.
9. PROPOSED TOWER GROUND RING
10. #2 TINNED SOLID COPPER GROUND WIRE FROM GROUND BAR TO TOWER GROUND RING
11. ISOLATED BOTTOM TOWER GROUND BAR
12. ICE BRIDGE POST
13. GROUND LEAD FROM TOWER TO TOWER GROUND RING (TYP)
14. PROPOSED SITE GROUND RING

## TOWER GROUNDING PLAN

SCALE: ⅛" = 1'-0"

0 8 16
SCALE IN FEET

## NOTE:

MINIMUM SPACING OF 12" BETWEEN ALL CADWELDS

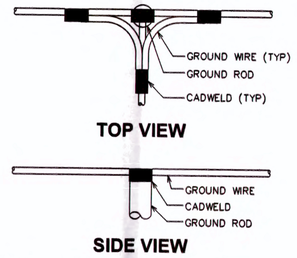


## CADWELD GROUNDING DETAIL

SCALE: N.T.S.

## NOTE:

THE CONTRACTOR SHALL UTILIZE AN INTERMEDIATE GROUND BAR FOR ANTENNA RAD CENTERS OVER 200'.

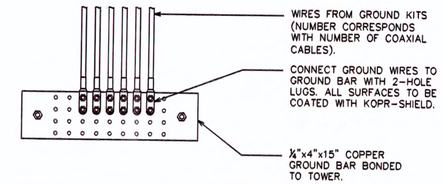


## UPPER / INTERMEDIATE GROUND BAR DETAIL

SCALE: N.T.S.

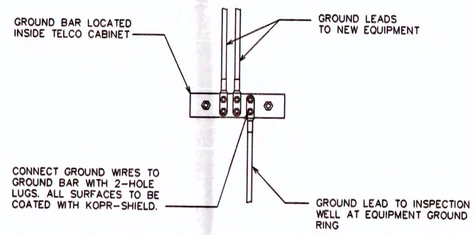


## GROUND BAR IN TELCO CABINET

SCALE: N.T.S.

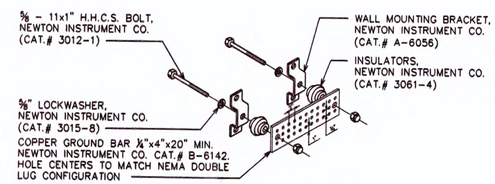


## NOTE:

GROUND BAR SHALL BE SIZED TO ACCOMODATE ALL GROUNDING CONNECTIONS REQUIRED PLUS PROVIDE 50% SPARE CAPACITY.

## STANDARD GROUND BAR DETAIL

SCALE: N.T.S.

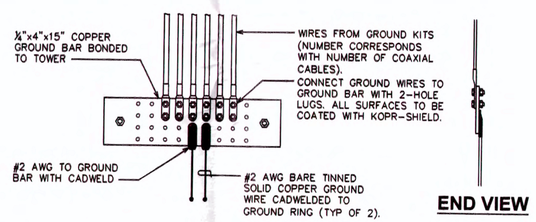


## LOWER GROUND BAR DETAIL

SCALE: N.T.S.

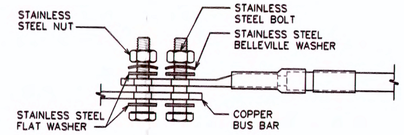


## NOTES:

1. ALL HARDWARE SHALL BE 18-8 STAINLESS STEEL, INCLUDING THE BELLEVILLE WASHERS. COAT ALL SURFACES WITH KOPR-SHIELD BEFORE MATING.
2. FOR GROUND BOND TO STEEL ONLY; INSERT A DRAGON TOOTH WASHER BETWEEN THE LUG AND STEEL. COAT ALL SURFACES WITH KOPR-SHIELD.

## LUG DETAIL

SCALE: N.T.S.

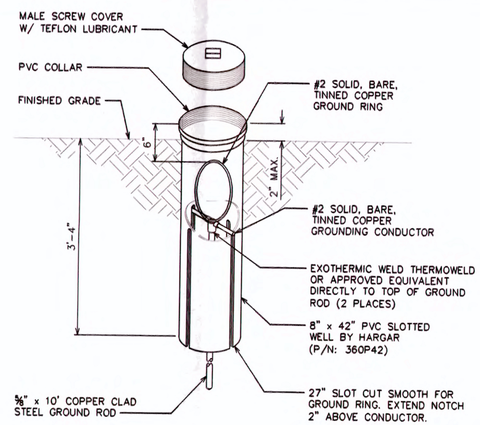


## GROUND ROD WITH INSPECTION WELL DETAIL

SCALE: N.T.S.

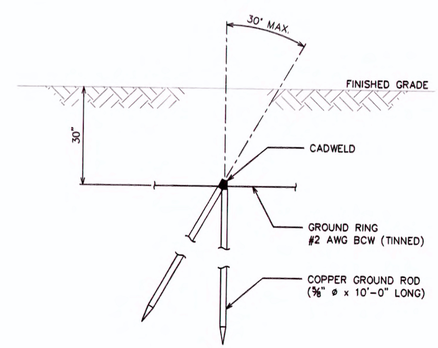


## COPPER-CLAD STEEL GROUND ROD DETAIL

SCALE: N.T.S.

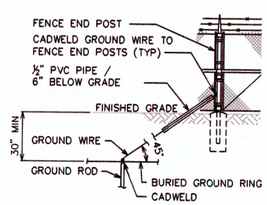


## FENCE GROUNDING

SCALE: N.T.S.

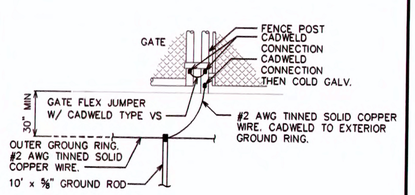


## TYPICAL GATE POST GROUNDING DETAIL

SCALE: N.T.S.


PLANS PREPARED FOR:
T-Mobile
185 FAIRCHILD STREET
CHARLESTON, SC 29492
OFFICE: (843) 216-1210

PLANS PREPARED BY:
TOWER ENGINEERING PROFESSIONALS
326 TRYON ROAD
RALEIGH, NC 27603-5263
OFFICE: (919) 661-6351
FAX: (919) 661-6350
N.C. LICENSE # C-1794


| REV | DATE | ISSUED FOR: |
|---|---|---|
| 2 | 02-11-15 | CONSTRUCTION |
| 1 | 01-30-15 | PRELIMINARY |
| 0 | 01-29-15 | PRELIMINARY |

DRAWN BY: DAM
CHECKED BY: JJC

PROJECT INFORMATION:
ERWIN ROAD
TMO ID: 5RA0532D
SKYWAY SITE #: NC-08828
5022 KERLEY ROAD
DURHAM, NC 27705
(ORANGE COUNTY)

SEAL:

February 11, 2015

SHEET TITLE:
GROUNDING NOTES & DETAILS I

REVISION: 2
TEP #: 50061

SHEET NUMBER:
E-2

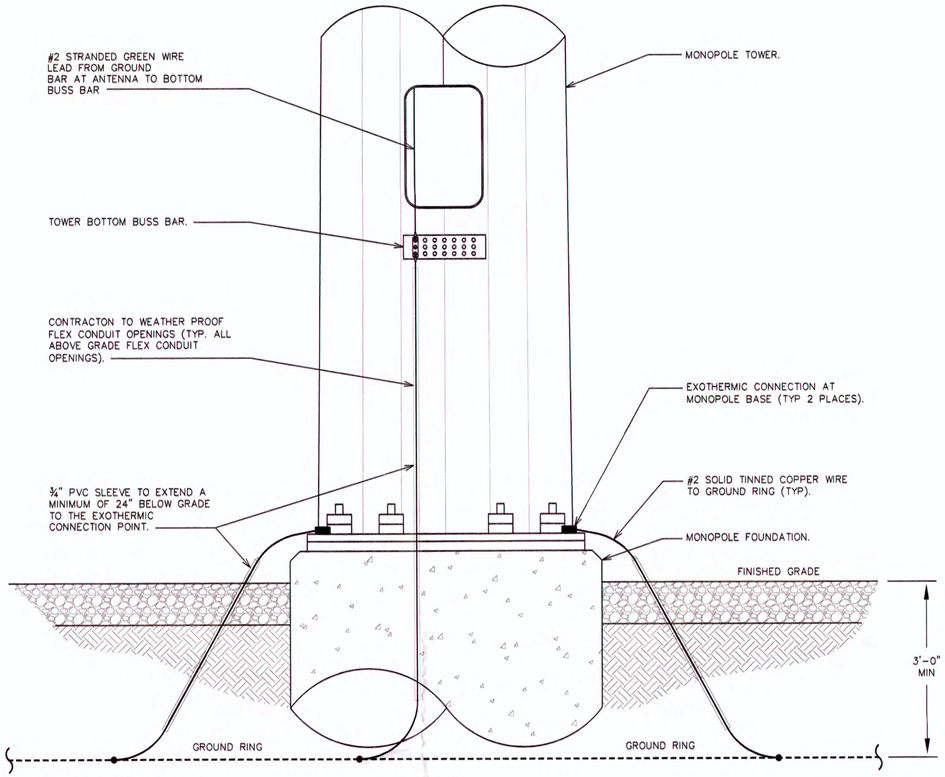


## TOWER GROUNDING DETAIL

SCALE: N.T.S.

**NOTE:**

SEE SHEET E-1 FOR PPC RACK DETAIL.

## PPC SCHEDULE

| PANEL DESIGNATION 'A' WITH SEPARATE GROUND BUSS | | 120/240 VOLTS 1 PHASE | | | 3 WIRE SURFACE MOUNTED | | | 200A, 2 POLE MAIN BREAKER | |
|---|---|---|---|---|---|---|---|---|---|
| NO. | LOAD SERVED | øA VA | øB VA | AMP / POLE | AMP / POLE | øB VA | øA VA | LOAD SERVED | NO. |
| 1 | RADIO CABINET #1 | 3300 | – | 60/2 | 30/2 | 300 | – | SUPPRESSOR | 7 |
| 2 | | – | 3300 | | | – | 300 | | 8 |
| 3 | SPARE | – | – | – | 15/1 | 150 | – | GFI | 9 |
| 4 | SPARE | – | – | – | – | – | – | SPARE | 10 |
| 5 | LIGHT | 500 | – | 20/1 | – | – | – | SPARE | 11 |
| 6 | FAN | – | 200 | 20/1 | – | – | – | SPARE | 12 |
| VOLT AMPS | | 3800 | 3500 | | | 450 | 300 | VOLT AMPS | |
| | | 8050 | | | | | | TOTAL VOLT AMPERES | |
| | | 10063 | | | | | | DEMAND VA (TOTAL VA X 1.25) | |

## PPC SCHEDULE

SCALE: N.T.S.

**NOTE:**

SECTOR OF ANTENNAS SHOWN

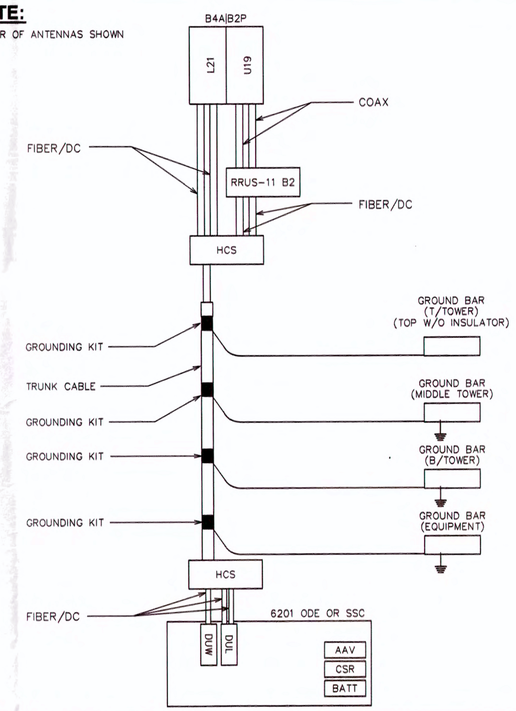


## ANTENNA CABLE & GROUNDING SCHEMATIC

SCALE: N.T.S.

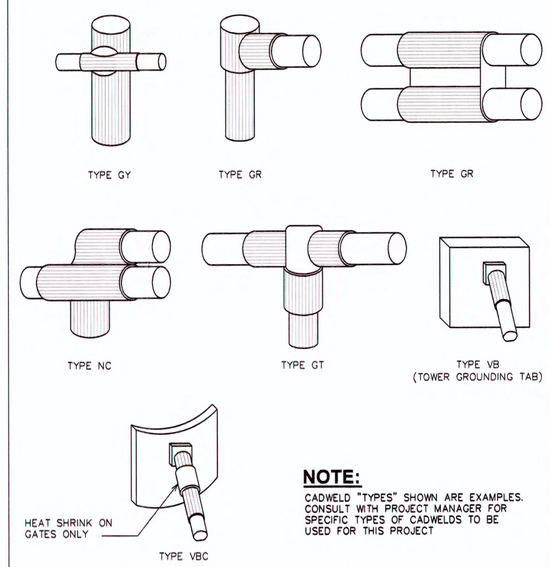


**NOTE:**

CADWELD "TYPES" SHOWN ARE EXAMPLES. CONSULT WITH PROJECT MANAGER FOR SPECIFIC TYPES OF CADWELDS TO BE USED FOR THIS PROJECT

## CADWELL DETAILS

SCALE: N.T.S.

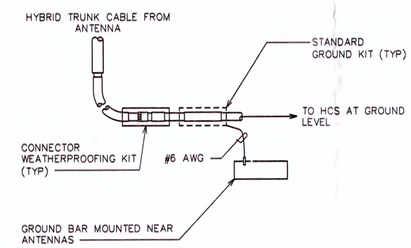


## GROUND WIRE TO GROUND BAR CONNECTION AT ANTENNA

SCALE: N.T.S.

**NOTE:**

DO NOT INSTALL CABLE GROUND KIT AT A BEND.

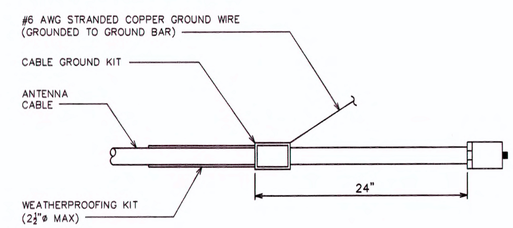


## CABLE GROUNDING DETAIL

SCALE: N.T.S.


PLANS PREPARED FOR:
T-Mobile
185 FAIRCHILD STREET
CHARLESTON, SC 29492
OFFICE: (843) 216-1210

PLANS PREPARED BY:
TOWER ENGINEERING PROFESSIONALS
326 TRYON ROAD
RALEIGH, NC 27603-5263
OFFICE: (919) 661-6351
FAX: (919) 661-6350
N.C. LICENSE # C-1794


| REV | DATE | ISSUED FOR: |
|---|---|---|
| 2 | 02-11-15 | CONSTRUCTION |
| 1 | 01-30-15 | PRELIMINARY |
| 0 | 01-29-15 | PRELIMINARY |

DRAWN BY: BAM CHECKED BY: JJC

PROJECT INFORMATION:
ERWIN ROAD
TMO ID: 5RA0532D
SKYWAY SITE #: NC-08828
5022 KERLEY ROAD
DURHAM, NC 27705
(ORANGE COUNTY)

SEAL:

SEAL 042109 ENGINEER MARK S. QUAKENBUSH NORTH CAROLINA PROFESSIONAL

February 11, 2015

SHEET TITLE: GROUNDING NOTES & DETAILS II

SHEET NUMBER: E-3

REVISION: 2

TEP #: 58861